COUNTY OF TEHAMA

# DEPARTMENT OF PUBLIC WORKS

## PROJECT PLANS FOR CONSTRUCTION ON

# 99W AT THE THOMES CREEK BRIDGE

# BR. NO. 08C-0377

**FEDERAL AID BRIDGE REPLACEMENT PROJECT No. BRLS 5908 (070)**
**COUNTY CONTRACT NO. 14-370861**
**TO BE SUPPLEMENTED BY STATE OF CALIFORNIA 2010 STANDARD PLANS**

BRIDGE NO.
08C-0377

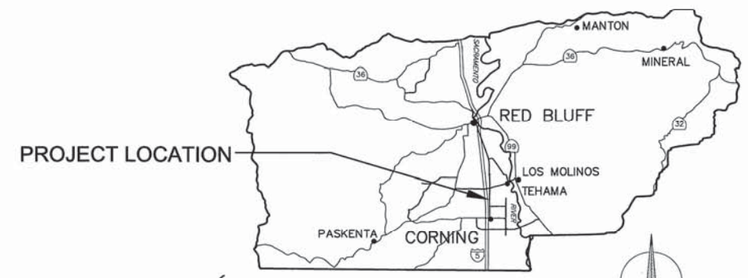


VICINITY MAP

N

## LEGEND

| | |
|---|---|
| AT&T | AT&T TELEPHONE COMPANY |
| CFNR | CALIFORNIA NORTHERN RAILROAD |
| ELEV | ELEVATION |
| FB | FLAT BAR |
| MGS | MIDWEST GUARDRAIL SYSTEM |
| MIN | MINIMUM |
| PG&E | PACIFIC GAS AND ELECTRIC |
| PVI | POINT OF VERTICAL INTERSECTION |
| TYP | TYPICAL |
| WSE | WATER SURFACE ELEVATION |
| ◎ | SURVEY MONUMENT |
| ⚠ | CONTROL POINT |
| — TC — TC — | UNDERGROUND TELEPHONE COPPER LINE |
| —OHU— | EXISTING OVERHEAD UTILITY LINE |
| — x — x — x — | EXISTING FENCE LINE |
| — x — x — x — | NEW FENCE LINE |
| | RIGHT OF WAY LINE |
| — · · · — | FLOWLINE |
| · · · · · · | LIMITS OF CONSTRUCTION (TOP/TOE OF SLOPE) |
| | MIDWEST GUARD RAIL SYSTEM PER CALTRANS STANDARD PLAN |
| — — F — — | FILL GRADING LIMIT |
| - - - - C - - - - | CUT GRADING LIMIT |

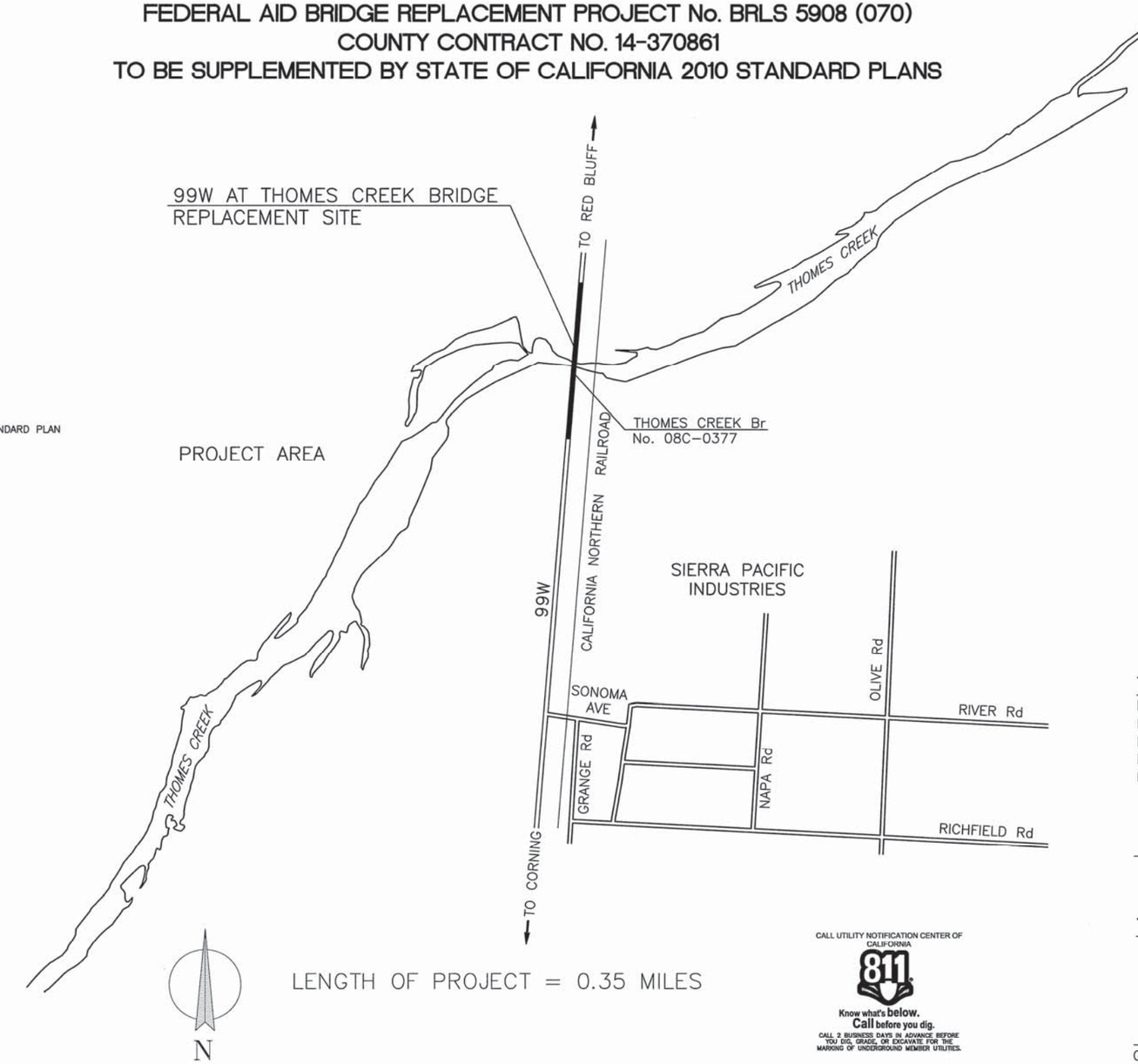


LENGTH OF PROJECT = 0.35 MILES

CALL UTILITY NOTIFICATION CENTER OF CALIFORNIA
811
Know what's below.
Call before you dig.
CALL 2 BUSINESS DAYS IN ADVANCE BEFORE YOU DIG, GRADE, OR EXCAVATE FOR THE MARKING OF UNDERGROUND MEMBER UTILITIES.

## INDEX OF SHEETS


ROADWAY PLANS

| SHEET | DRAWING | DESCRIPTION |
|---|---|---|
| 1 | T-1 | TITLE SHEET |
| 2 | D-1 | TYPICAL SECTIONS |
| 3 | PC-1 | PROJECT CONTROL |
| 4-5 | P-1 TO P-2 | PLAN |
| 6-8 | P-3 TO P-5 | PROFILE |
| 9-10 | C-1 TO C-2 | CONSTRUCTION DETAILS |
| 11 | EC-1 | EROSION AND SEDIMENT CONTROL |
| 12 | G-1 | CONTOUR GRADING |
| 13 | U-1 | UTILITIES |
| 14 | DE-1 | DETOUR PLAN |
| 15-16 | Q-1 TO Q-2 | QUANTITIES |
| 17 | PP-1 | PLANTING PLAN |
| 18-19 | PP-2 TO PP-3 | PLANTING DETAILS |
| | STRUCTURE PLANS | |
| 20-47 | S-1 TO S-28 | |


## TEHAMA COUNTY BOARD OF SUPERVISORS

DISTRICT 1 STEVE CHAMBLIN
DISTRICT 2 SANDRA BRUCE
DISTRICT 3 DENNIS GARTON
DISTRICT 4 BOB WILLIAMS
DISTRICT 5 BURT BUNDY

APPROVED BY:

Steve R. Chamblin
CHAIRPERSON BOARD OF SUPERVISORS

BOARD OF SUPERVISORS TEHAMA COUNTY, CA

## TEHAMA COUNTY DEPARTMENT OF PUBLIC WORKS

GARY ANTONE
DIRECTOR OF PUBLIC WORKS

REGISTERED PROFESSIONAL ENGINEER GARY B. ANTONE C 36077 CIVIL STATE OF CALIFORNIA

FOR REFERENCE ONLY--NOT FOR BIDDING PURPOSES

| No. | REVISION: | BY: | DATE: |
|---|---|---|---|
| | | | |


These drawings are instruments of service provided by the Tehama County Public Works Dept. and are not to be used for purposes of construction unless signed and sealed by a Professional Engineer in the employ of the County of Tehama



TEHAMA COUNTY PUBLIC WORKS
9380 San Benito Ave.
Gerber, Ca 96035
(530) 385-1462


SCALE HORIZ: N/A VERT: N/A
DRAWN BY: J. GREEN DATE: 11/01/2013
CHECKED BY: M. SHIPPEN DATE: 7/16/2013

99W AT THOMES CREEK BRIDGE
PROJECT (REPLACEMENT)
TITLE SHEET

PROJECT NO.: 14-370861

| SHEET NO. | PAGE NO. |
|---|---|
| T-1 | 01/47 |

01_T-1_TITLE.dwg

NOTE: SEE SHEET S-13 FOR BRIDGE TYPICAL SECTIONS "99W" Sta 101+70.00 TO 108+39.00

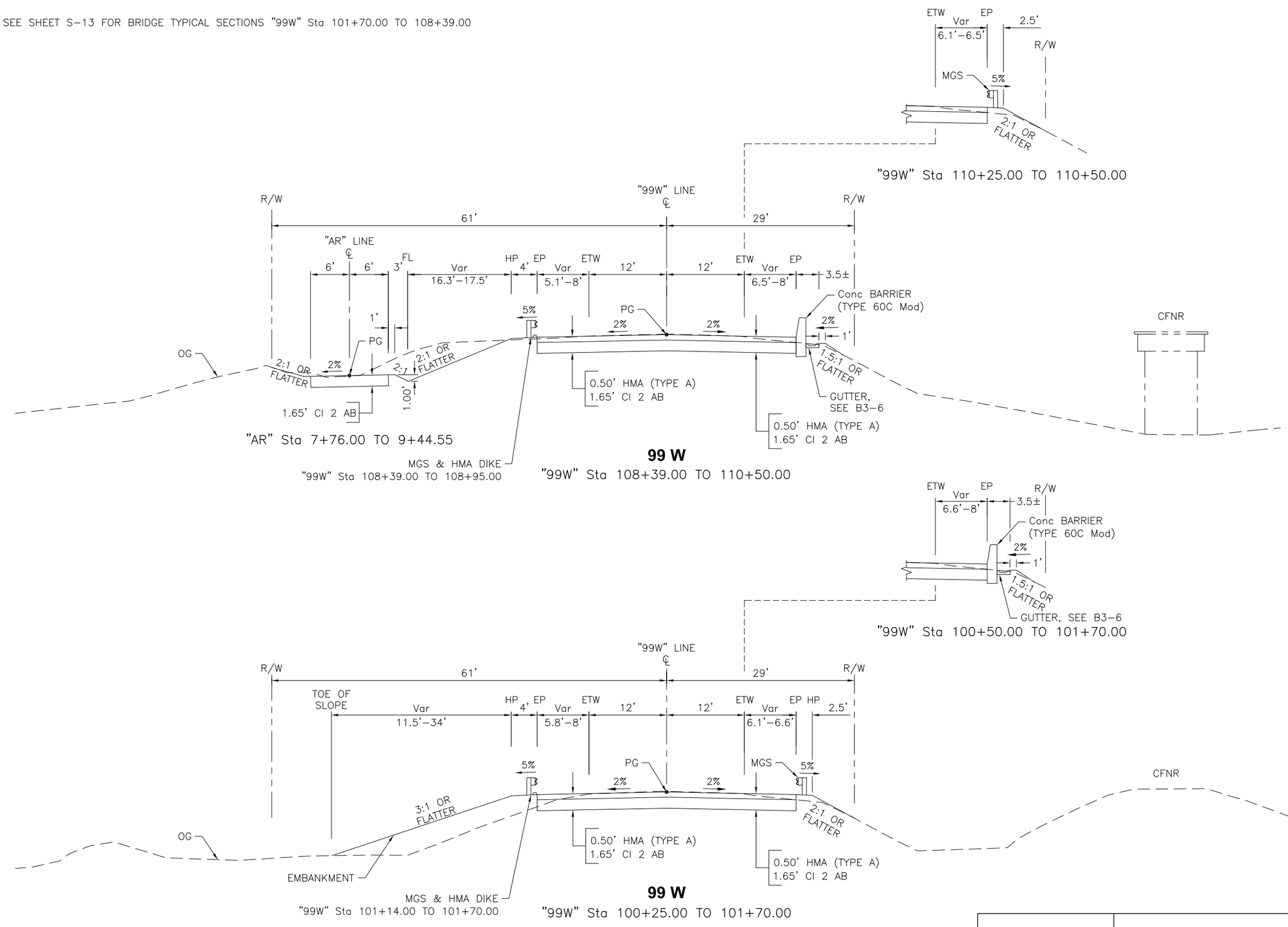


BRIDGE NO.
08C-0377

| No. | REVISION: | BY: | DATE: |
|---|---|---|---|
| | | | |

These drawings are instruments of service provided by the Tehama County Public Works Dept. and are not to be used for any type of construction unless signed and sealed by a Professional Engineer in the employ of the County of Tehama

TEHAMA COUNTY PUBLIC WORKS
9380 San Benito Ave.
Gerber, Ca. 96035
(530) 385-1462

COUNTY OF TEHAMA

FOR REFERENCE ONLY-NOT FOR BIDDING PURPOSES

HORIZ: NO SCALE
VERT:
SCALE
DRAWN BY: J. KUSZ
DATE: 11/01/2013
CHECKED BY: M. SHIPPEN
DATE: 7/16/2013

99W AT THOMES CREEK BRIDGE
PROJECT (REPLACE)
TYPICAL SECTIONS

HDR
HDR Engineering, Inc.
2365 Iron Point Road, Suite 300 Folsom, CA 95630

REGISTERED CIVIL ENGINEER

REGISTERED PROFESSIONAL ENGINEER
HENRY H. LUU
No. 79780
Exp. 9-30-14
CIVIL
STATE OF CALIFORNIA

PROJECT NO.: 14-370861

| SHEET NO. | PAGE NO. |
|---|---|
| D-1 | 02/47 |

BRIDGE NO.
08C-0377

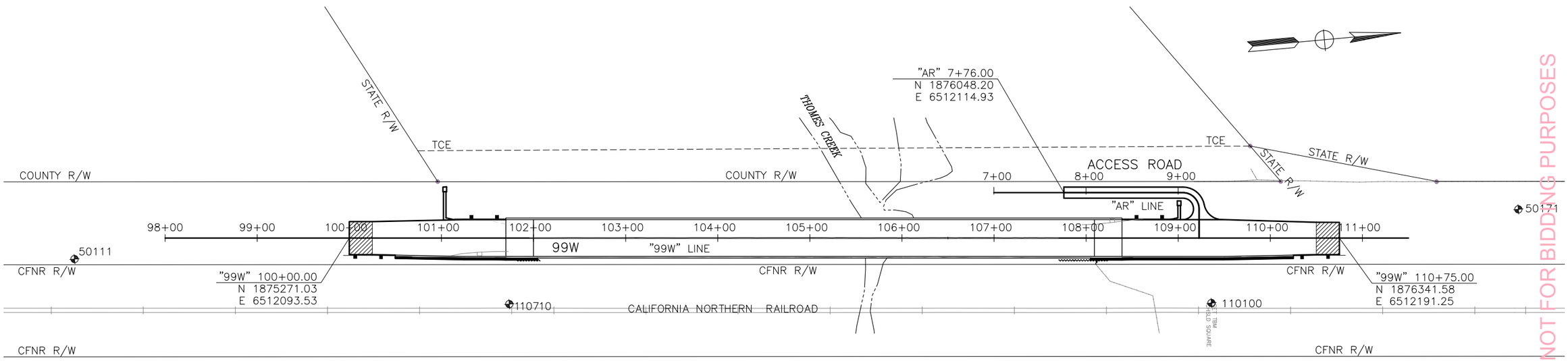


| POINT TABLE | | | | |
|---|---|---|---|---|
| POINT # | RAW DESCRIPTION | ELEVATION | NORTHING | EASTING |
| 110710 | BRASS DISK J-844 | 274.66 | 1875437.50 | 6512180.77 |
| 50111 | 60d SPIKE | 272.99 | 1874971.78 | 6512089.17 |
| 110100 | TBM CHSLD SQ. | 274.61 | 1876196.84 | 6512248.91 |
| 50171 | 5/8 REBAR | 269.80 | 1876537.96 | 6512177.89 |

FOR REFERENCE ONLY-NOT FOR BIDDING PURPOSES

| No. | REVISION: | BY: | DATE: |
|---|---|---|---|
| | | | |

These drawings are instruments of service provided by the Tehama County Public Works Dept. and are not to be used for any type of construction unless signed and sealed by a Professional Engineer in the employ of the County of Tehama

TEHAMA COUNTY
PUBLIC WORKS
9380 San Benito Ave.
Gerber, Ca. 96035
(530) 385-1462

HORIZ: NO SCALE
VERT:
SCALE
DRAWN BY: J. KUSZ
DATE: 11/01/2013
CHECKED BY: M. SHIPPEN
DATE: 7/16/2013

99W AT THOMES CREEK BRIDGE
PROJECT (REPLACE)
PROJECT CONTROL

HDR
HDR Engineering, Inc.
2365 Iron Point Road, Suite 300 Folsom, CA 95630

REGISTERED CIVIL ENGINEER

REGISTERED PROFESSIONAL ENGINEER
HENRY H. LUU
No. 79780
Exp. 9-30-14
CIVIL
STATE OF CALIFORNIA

PROJECT NO.: 14-370861
SHEET NO. PC-1
PAGE NO. 03/47

BRIDGE NO.
08C-0377

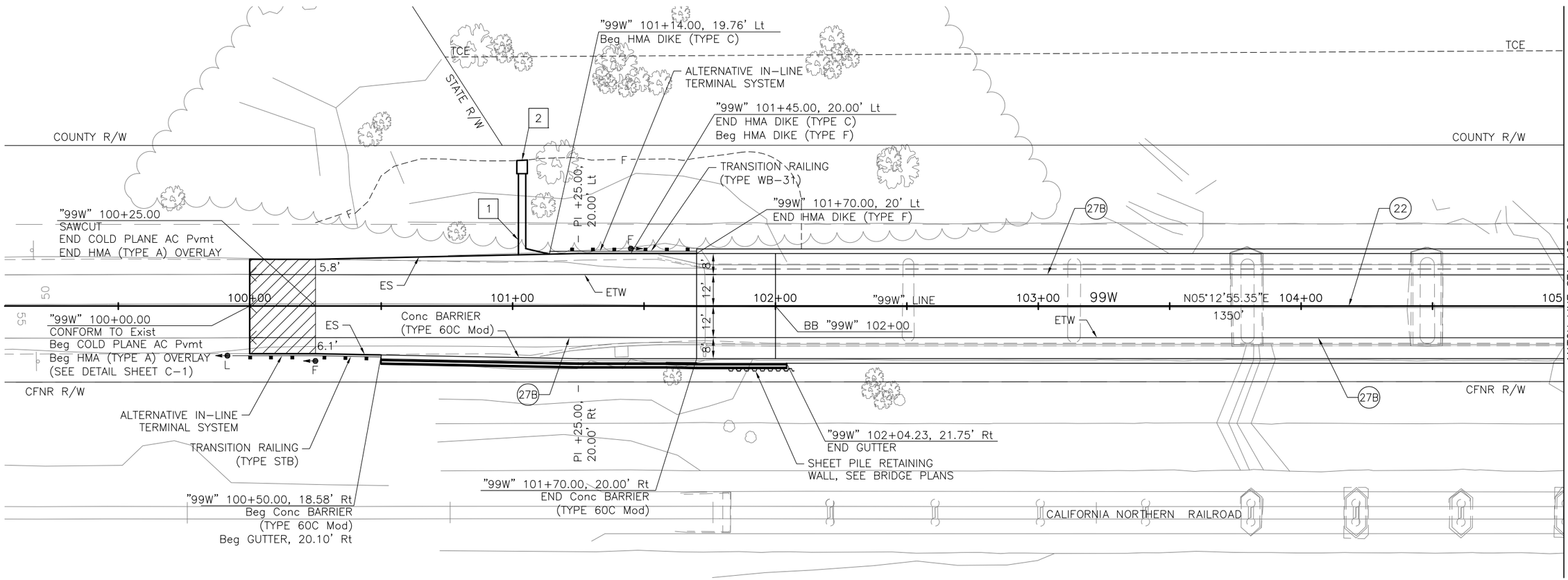


## NOTES:

1. FOR COMPLETE RIGHT OF WAY AND ACCURATE ACCESS DATA, SEE RIGHT OF WAY RECORD MAP AT TEHAMA COUNTY OFFICE.
2. ALL MONUMENTS OR CONTROL POINTS SHALL BE PROTECTED DURING CONSTRUCTION AND REPLACED BY CONTRACTOR IF DAMAGED BY CONTRACTOR'S OPERATIONS, AT HIS/HER OWN COST.
3. LOCATIONS OF EXISTING UTILITIES SHOWN ARE APPROXIMATE. CONTRACTOR SHALL FIELD VERIFY LOCATIONS OF ALL UTILITIES IN AREAS OF WORK.
4. ALTERNATIVE IN-LINE TERMINAL SYSTEM SHALL HAVE A MAXIMUM LENGTH OF 31'-6".

## CONSTRUCTION NOTES:

1. INSTALL OVERSIDE DRAIN. SEE DETAIL SHEET C-1
2. INSTALL ROCK SLOPE PROTECTION. SEE DETAIL SHEET C-1.

## LEGEND:

- (No) PAVEMENT DELINEATION DETAIL NUMBER (PER CALTRANS STANDARD PLANS)
- COLD PLANE AND HMA OVERLAY
- L — OBJECT MARKER (TYPE L)
- F — GUARD RAILING DELINEATOR (TYPE F OR G)

FOR REFERENCE ONLY-NOT FOR BIDDING PURPOSES

| No. | REVISION: | BY: | DATE: |
|---|---|---|---|
| | | | |

These drawings are instruments of service provided by the Tehama County Public Works Dept. and are not to be used for any type of construction unless signed and sealed by a Professional Engineer in the employ of the County of Tehama


TEHAMA COUNTY
PUBLIC WORKS
9380 San Benito Ave.
Gerber, Ca 96035
(530) 385-1462


COUNTY OF TEHAMA

| SCALE | |
|---|---|
| HORIZ: | 1"=20' |
| VERT: | |
| DRAWN BY: | J. KUSZ |
| DATE: | 11/01/2013 |
| CHECKED BY: | M. SHIPPEN |
| DATE: | 7/16/2013 |

# 99W AT THOMES CREEK BRIDGE PROJECT (REPLACE)
## PLAN


HDR
HDR Engineering, Inc.
2365 Iron Point Road, Suite 300 Folsom, CA 95630


REGISTERED CIVIL ENGINEER

REGISTERED PROFESSIONAL ENGINEER
HENRY H. LUU
No. 79780
Exp. 9-30-14
CIVIL
STATE OF CALIFORNIA

PROJECT NO.: 14-370861

| SHEET NO. | PAGE NO. |
|---|---|
| P-1 | 04/47 |

BRIDGE NO.
08C-0377

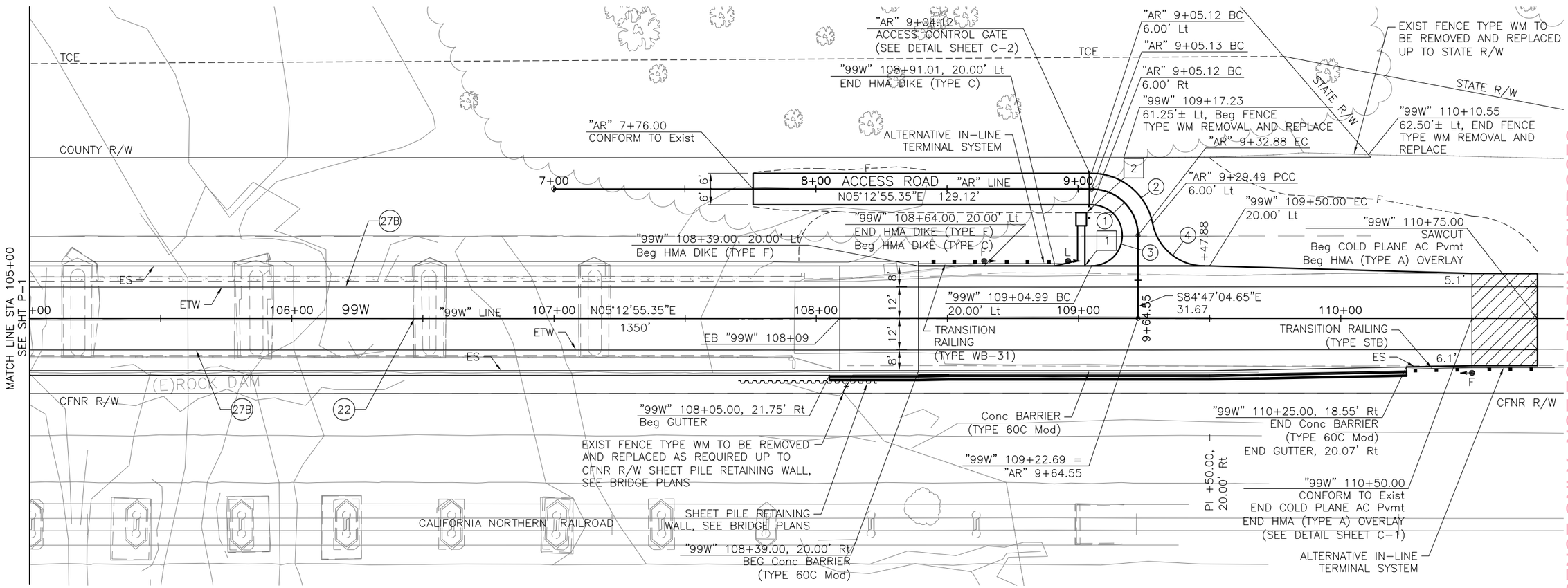


| CURVE DATA | | | | |
|---|---|---|---|---|
| NO. | R | Δ | T | L |
| 1 | 17.67 | 90°00'00" | 17.67' | 24.99' |
| 2 | 23.67' | 79°01'27" | 19.52' | 32.64 |
| 3 | 11.67' | 180°08'16" | 9697.39' | 36.69' |
| 4 | 20.00' | 79°00'12" | 16.49' | 27.58 |

FOR REFERENCE ONLY-NOT FOR BIDDING PURPOSES

| No. | REVISION: | BY: | DATE: |
|---|---|---|---|
| | | | |

These drawings are instruments of service provided by the Tehama County Public Works Dept. and are not to be used for any type of construction unless signed and sealed by a Professional Engineer in the employ of the County of Tehama

TEHAMA COUNTY PUBLIC WORKS
9380 San Benito Ave.
Gerber, Ca 96035
(530) 385-1462

COUNTY OF TEHAMA

| | |
|---|---|
| HORIZ: 1"=20' | |
| VERT: | |
| SCALE | |
| DRAWN BY: J. KUSZ | DATE: 11/01/2013 |
| CHECKED BY: M. SHIPPEN | DATE: 7/16/2013 |

99W AT THOMES CREEK BRIDGE
PROJECT (REPLACE)
PLAN

HDR
HDR Engineering, Inc.
2365 Iron Point Road, Suite 300 Folsom, CA 95630

REGISTERED CIVIL ENGINEER

REGISTERED PROFESSIONAL ENGINEER
HENRY H. LUU
No. 79780
Exp. 9-30-14
CIVIL
STATE OF CALIFORNIA

PROJECT NO.: 14-370861

| SHEET NO. | PAGE NO. |
|---|---|
| P-2 | 05 / 47 |

BRIDGE NO.
08C-0377

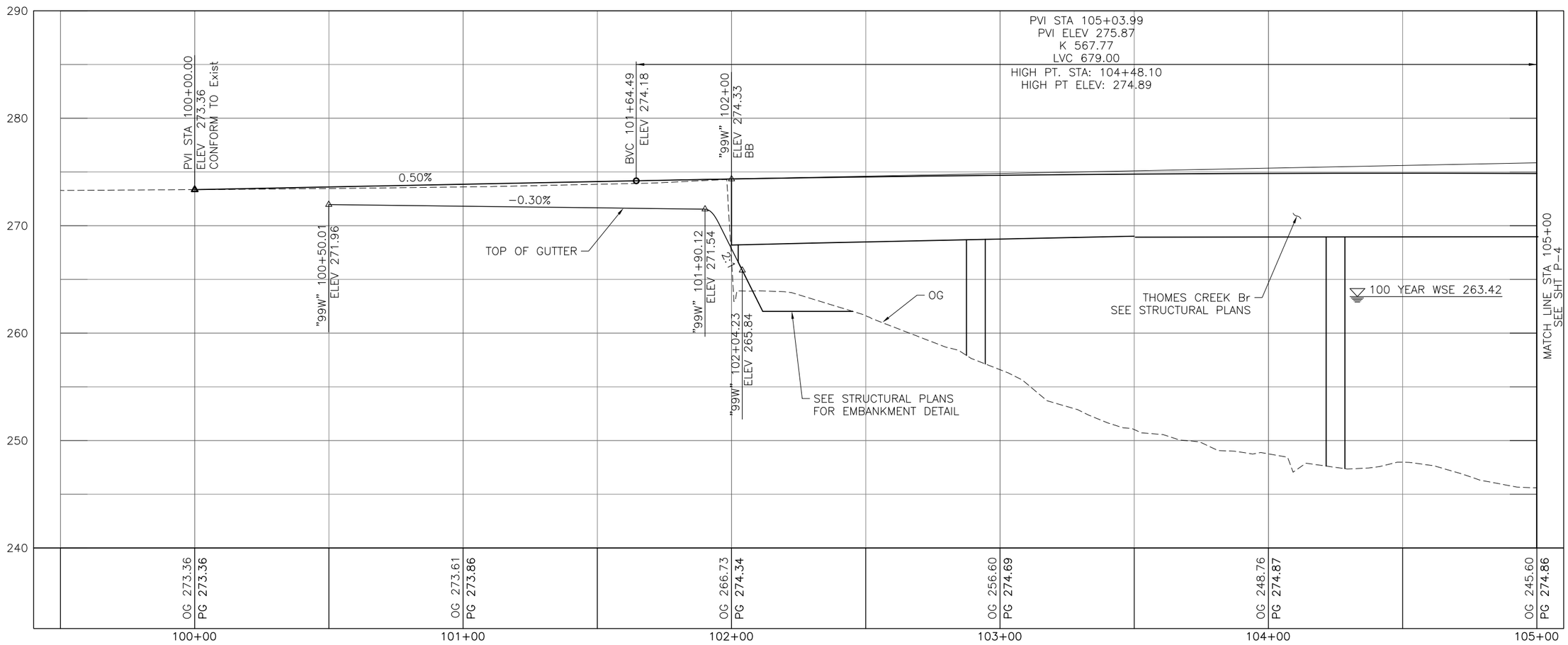


PROFILE
"99W" LINE

FOR REFERENCE ONLY--NOT FOR BIDDING PURPOSES

| No. | REVISION: | BY: | DATE: |
|---|---|---|---|
| | | | |

These drawings are instruments of service provided by the Tehama County Public Works Dept. and are not to be used for any type of construction unless signed and sealed by a Professional Engineer in the employ of the County of Tehama

TEHAMA COUNTY
PUBLIC WORKS
9380 San Benito Ave.
Gerber, Ca 96035
(530) 385-1462

COUNTY OF TEHAMA

| SCALE | |
|---|---|
| HORIZ: | 1"=20' |
| VERT: | 1"=4' |
| DRAWN BY: J. KUSZ | |
| DATE: | 11/01/2013 |
| CHECKED BY: M. SHIPPEN | |
| DATE: | 7/16/2013 |

99W AT THOMES CREEK BRIDGE
PROJECT (REPLACE)
PROFILE

HDR
HDR Engineering, Inc.
2365 Iron Point Road, Suite 300 Folsom, CA 95630

REGISTERED CIVIL ENGINEER

REGISTERED PROFESSIONAL ENGINEER
HENRY H. LUU
No. 79780
Exp. 9-30-14
CIVIL
STATE OF CALIFORNIA

PROJECT NO.: 14-370861

| SHEET NO. | PAGE NO. |
|---|---|
| P-3 | 06/47 |

BRIDGE NO.
08C-0377

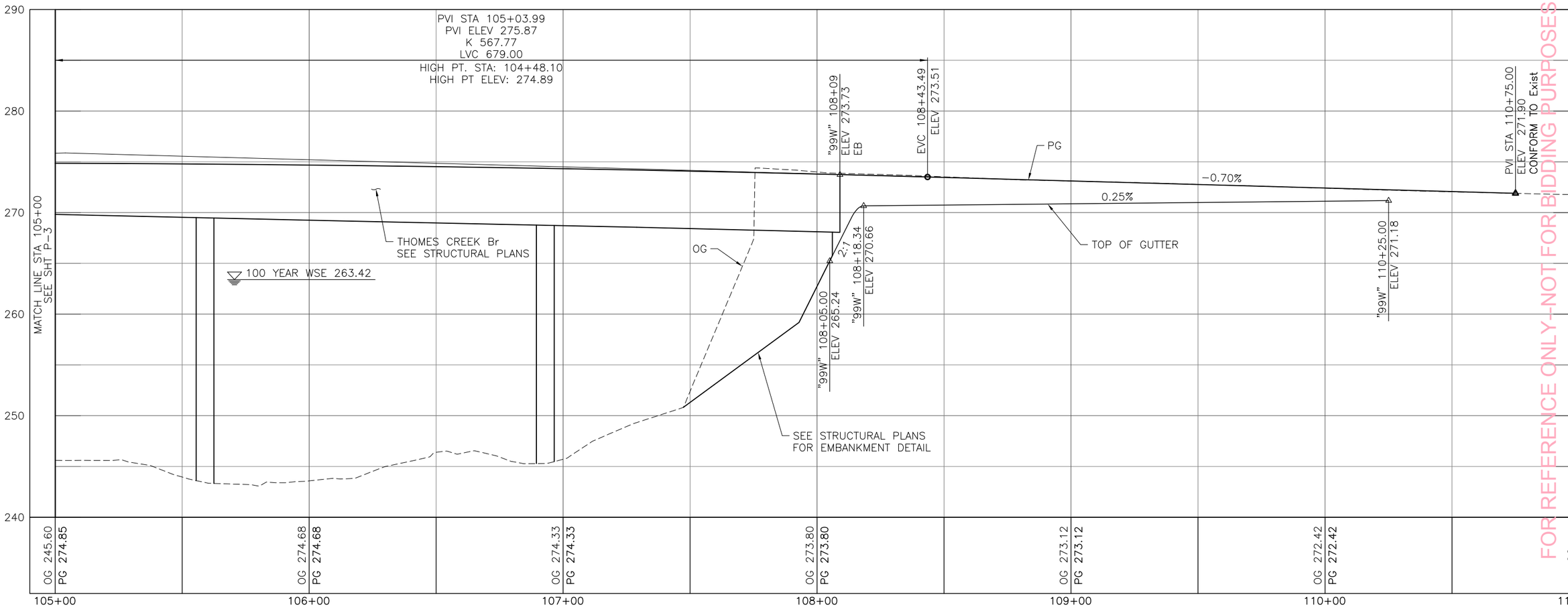


PROFILE
"99W" LINE

FOR REFERENCE ONLY-NOT FOR BIDDING PURPOSES

| No. | REVISION: | BY: | DATE: |
|---|---|---|---|
| | | | |

These drawings are instruments of service provided by the Tehama County Public Works Dept. and are not to be used for any type of construction unless signed and sealed by a Professional Engineer in the employ of the County of Tehama

TEHAMA COUNTY
PUBLIC WORKS
9380 San Benito Ave.
Gerber, Ca 96035
(530) 385-1462

| SCALE | |
|---|---|
| HORIZ: | 1"=20' |
| VERT: | 1"=4' |
| DRAWN BY: | J. KUSZ |
| DATE: | 11/01/2013 |
| CHECKED BY: | M. SHIPPEN |
| DATE: | 7/16/2013 |

# 99W AT THOMES CREEK BRIDGE
## PROJECT (REPLACE)
## PROFILE

PROJECT NO.: 14-370861

| SHEET NO. | PAGE NO. |
|---|---|
| P-4 | 07 / 47 |

HDR
HDR Engineering, Inc.
2365 Iron Point Road, Suite 300 Folsom, CA 95630

REGISTERED CIVIL ENGINEER

REGISTERED PROFESSIONAL ENGINEER
HENRY H. LUU
No. 79780
Exp. 9-30-14
CIVIL
STATE OF CALIFORNIA

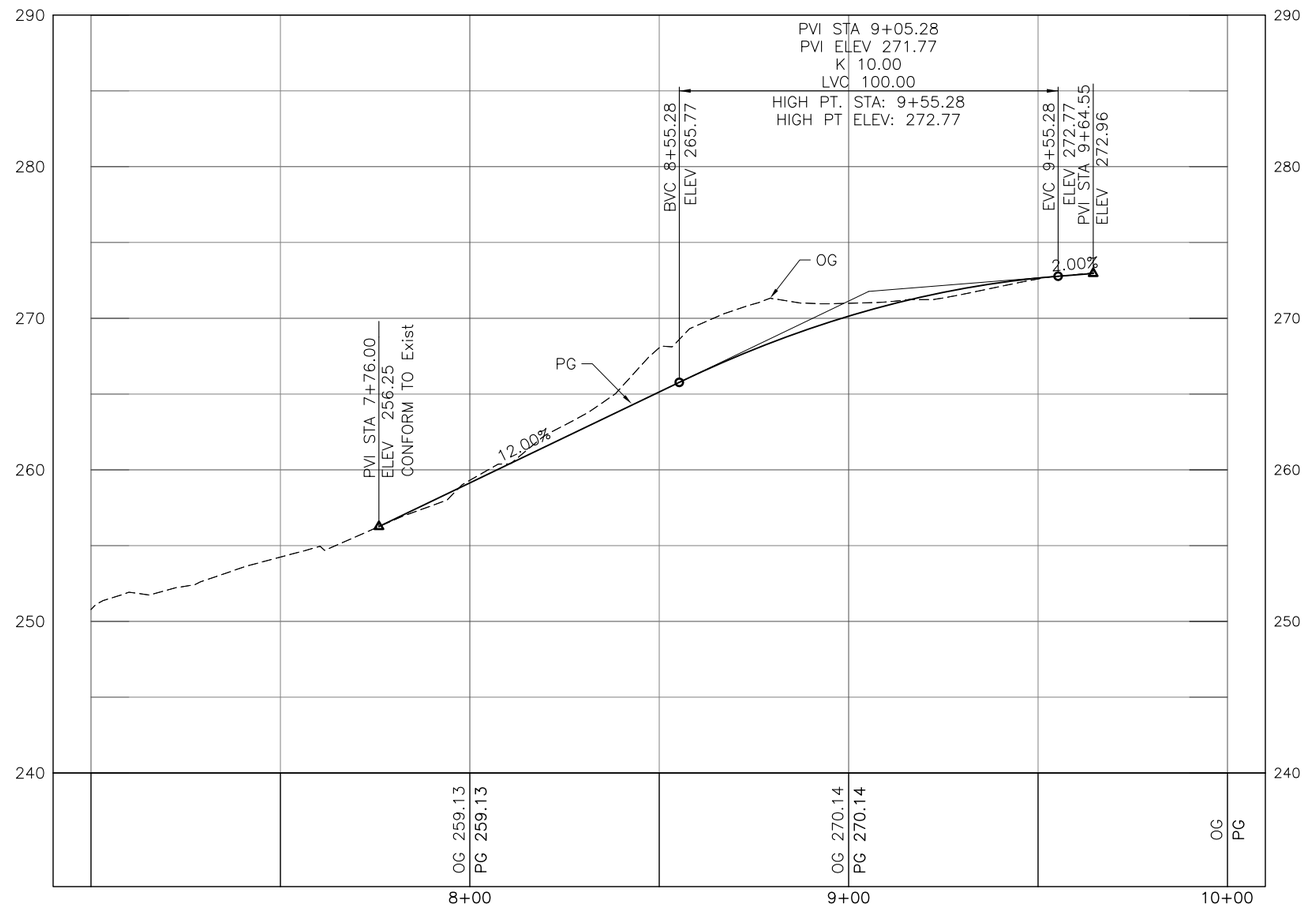


PROFILE

"AR" LINE

("99W" LINE Sta 109+33.69 Lt)

BRIDGE NO.
08C-0377

| No. | REVISION: | BY: | DATE: |
|---|---|---|---|
| | | | |

These drawings are instruments of service provided by the Tehama County Public Works Dept. and are not to be used for any type of construction unless signed and sealed by a Professional Engineer in the employ of the County of Tehama

TEHAMA COUNTY
PUBLIC WORKS

9380 San Benito Ave.
Gerber, Ca. 96035
(530) 385-1462

FOR REFERENCE ONLY-NOT FOR BIDDING PURPOSES

| SCALE | |
|---|---|
| HORIZ: | 1"=20' |
| VERT: | 1"=4' |
| DRAWN BY: J. KUSZ | |
| DATE: 11/01/2013 | |
| CHECKED BY: M. SHIPPEN | |
| DATE: 7/16/2013 | |

99W AT THOMES CREEK BRIDGE
PROJECT (REPLACE)
PROFILE

HDR

HDR Engineering, Inc.
2365 Iron Point Road, Suite 300 Folsom, CA 95630

REGISTERED CIVIL ENGINEER

REGISTERED PROFESSIONAL ENGINEER
HENRY H. LUU
No. 79780
Exp. 9-30-14
CIVIL
STATE OF CALIFORNIA

PROJECT NO.: 14-370861

| SHEET NO. | PAGE NO. |
|---|---|
| P-5 | 08/47 |

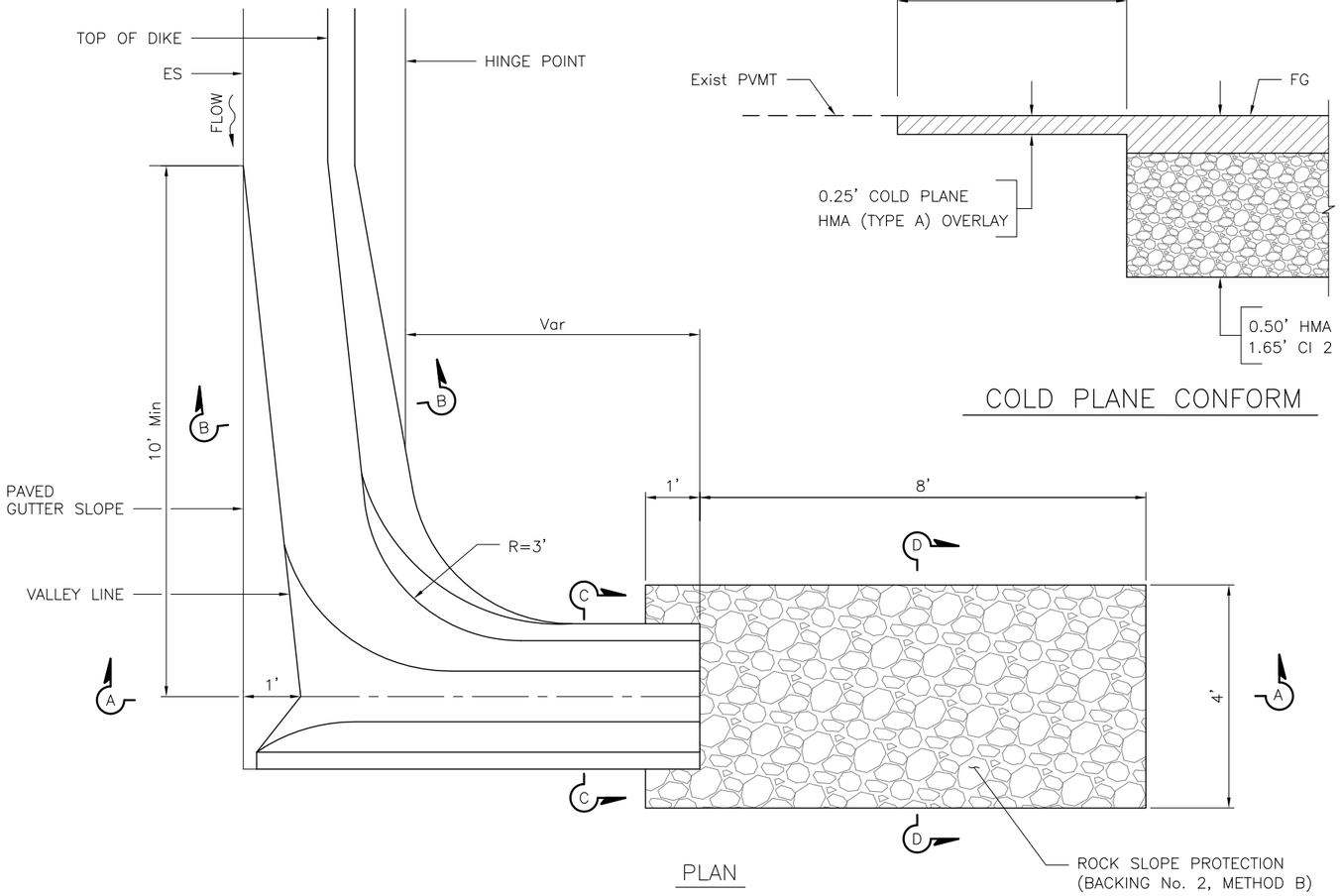


PLAN

MOUNTABLE DIKE

HOT MIX ASPHALT OVERSIDE DRAINS

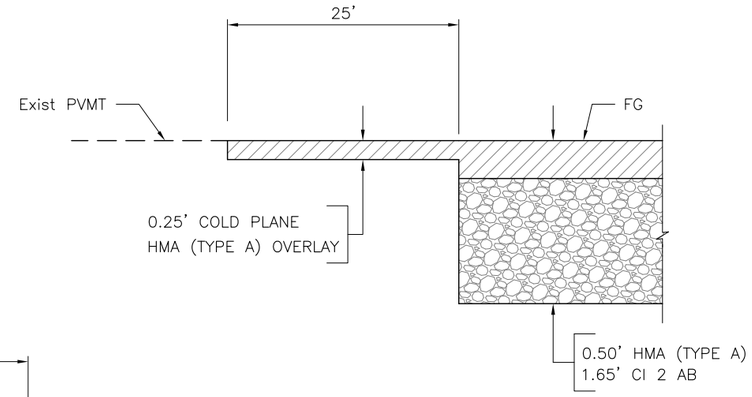


COLD PLANE CONFORM

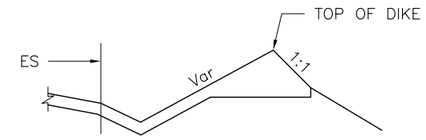


SECTION B–B

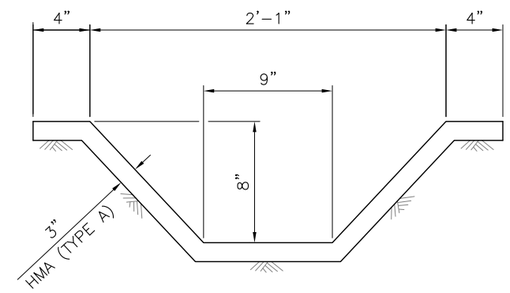


SECTION C–C

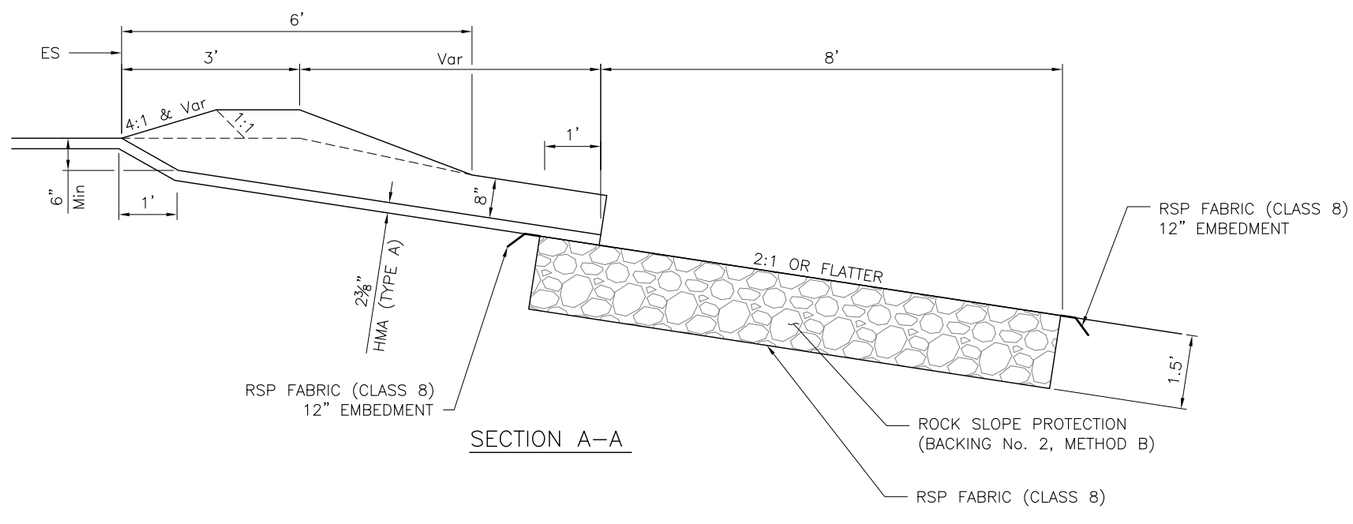


SECTION A–A

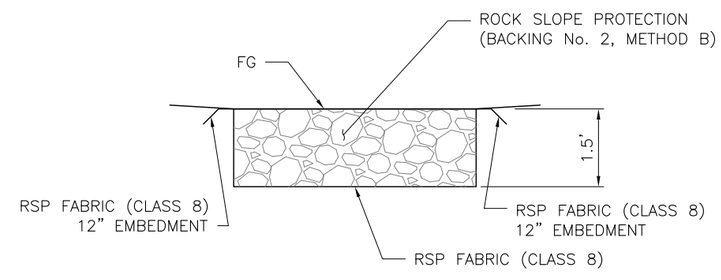


SECTION D–D

BRIDGE NO. 08C–0377

| No. | REVISION: | BY: | DATE: |
|---|---|---|---|
| | | | |

These drawings are instruments of service provided by the Tehama County Public Works Dept. and are not to be used for any type of construction unless signed and sealed by a Professional Engineer in the employ of the County of Tehama

TEHAMA COUNTY PUBLIC WORKS

9380 San Benito Ave.
Gerber, Ca. 96035
(530) 385-1462

FOR REFERENCE ONLY–NOT FOR BIDDING PURPOSES

| SCALE | |
|---|---|
| HORIZ: NO SCALE | |
| VERT: | |
| DRAWN BY: J. KUSZ | DATE: 11/01/2013 |
| CHECKED BY: M. SHIPPEN | DATE: 7/16/2013 |

99W AT THOMES CREEK BRIDGE
PROJECT (REPLACE)
CONSTRUCTION DETAILS

HDR

HDR Engineering, Inc.
2365 Iron Point Road, Suite 300 Folsom, CA 95630

REGISTERED CIVIL ENGINEER

REGISTERED PROFESSIONAL ENGINEER
HENRY H. LUU
No. 79780
Exp. 9–30–14
CIVIL
STATE OF CALIFORNIA

PROJECT NO.: 14–370861

| SHEET NO. | PAGE NO. |
|---|---|
| C-1 | 09/47 |

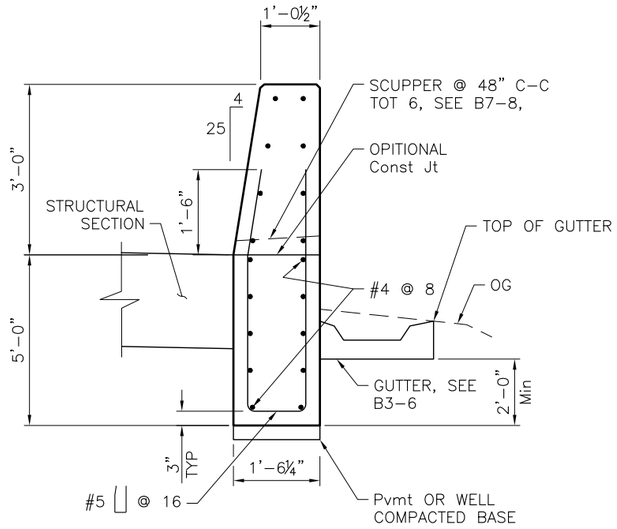


CONCRETE BARRIER (TYPE 60C Mod)

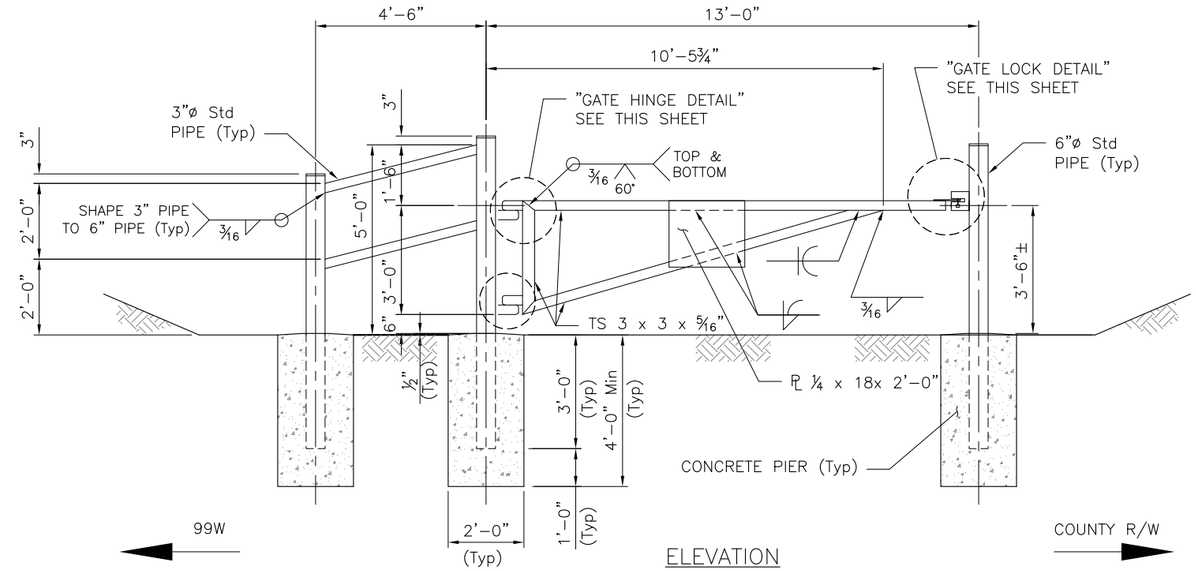


ELEVATION

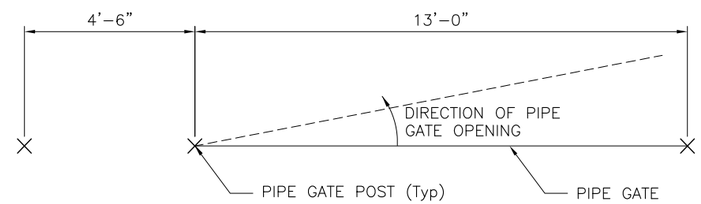


PLAN

ACCESS CONTROL GATE

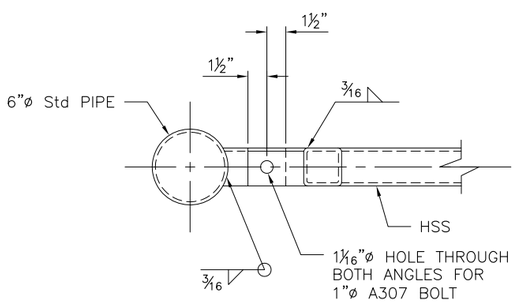


PLAN

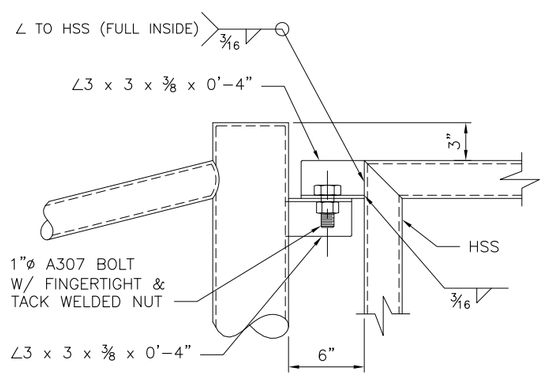


ELEVATION

GATE HINGE DETAIL

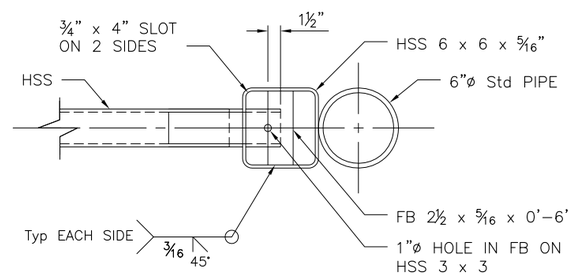


PLAN

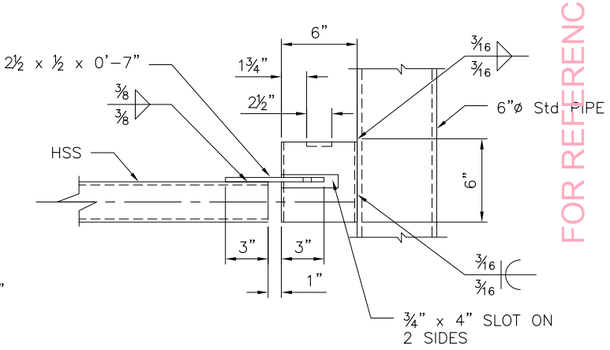


ELEVATION

GATE LOCK DETAIL

BRIDGE NO.
08C-0377

| No. | REVISION: | BY: | DATE: |
|---|---|---|---|
| | | | |

These drawings are instruments of service provided by the Tehama County Public Works Dept. and are not to be used for any type of construction unless signed and sealed by a Professional Engineer in the employ of the County of Tehama

TEHAMA COUNTY
PUBLIC WORKS
9380 San Benito Ave.
Gerber, Ca. 96035
(530) 385-1462

COUNTY OF TEHAMA

HORIZ: NO SCALE
VERT:
SCALE
DRAWN BY: J. KUSZ
DATE: 11/01/2013
CHECKED BY: M. SHIPPEN
DATE: 7/16/2013

99W AT THOMES CREEK BRIDGE
PROJECT (REPLACE)
CONSTRUCTION DETAILS

FOR REFERENCE ONLY-NOT FOR BIDDING PURPOSES

HDR
HDR Engineering, Inc.
2365 Iron Point Road, Suite 300 Folsom, CA 95630

REGISTERED CIVIL ENGINEER

REGISTERED PROFESSIONAL ENGINEER
HENRY H. LUU
No. 79780
Exp. 9-30-14
CIVIL
STATE OF CALIFORNIA

PROJECT NO.: 14-370861

| SHEET NO. | PAGE NO. |
|---|---|
| C-2 | 10/47 |

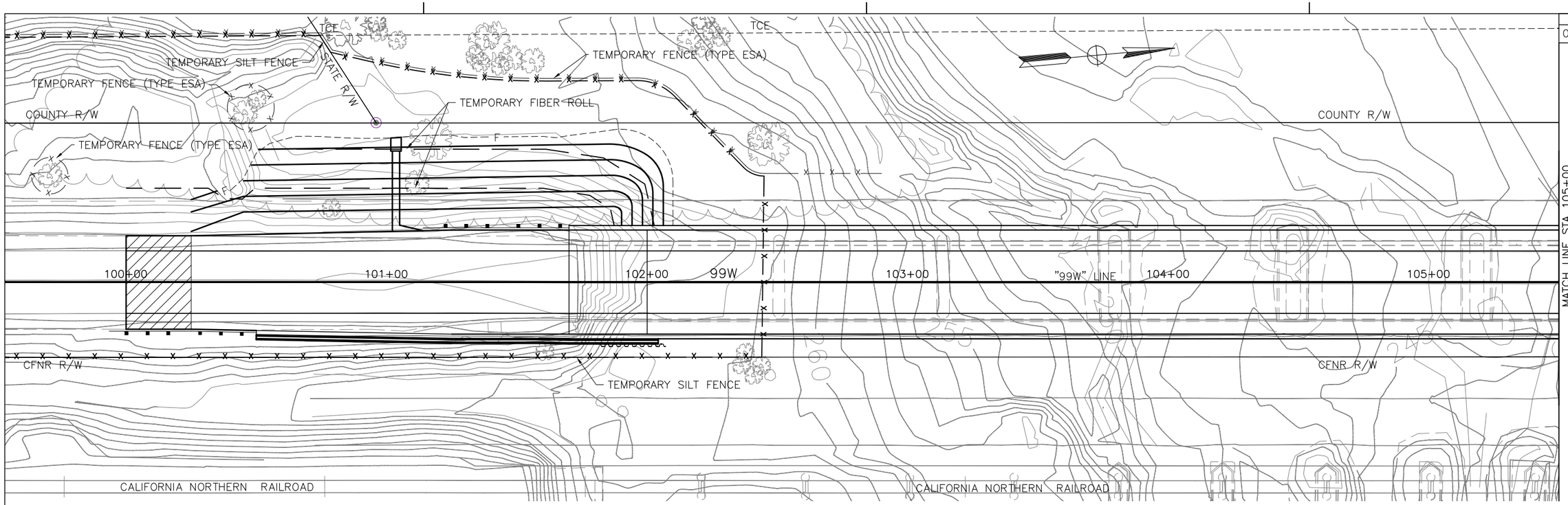


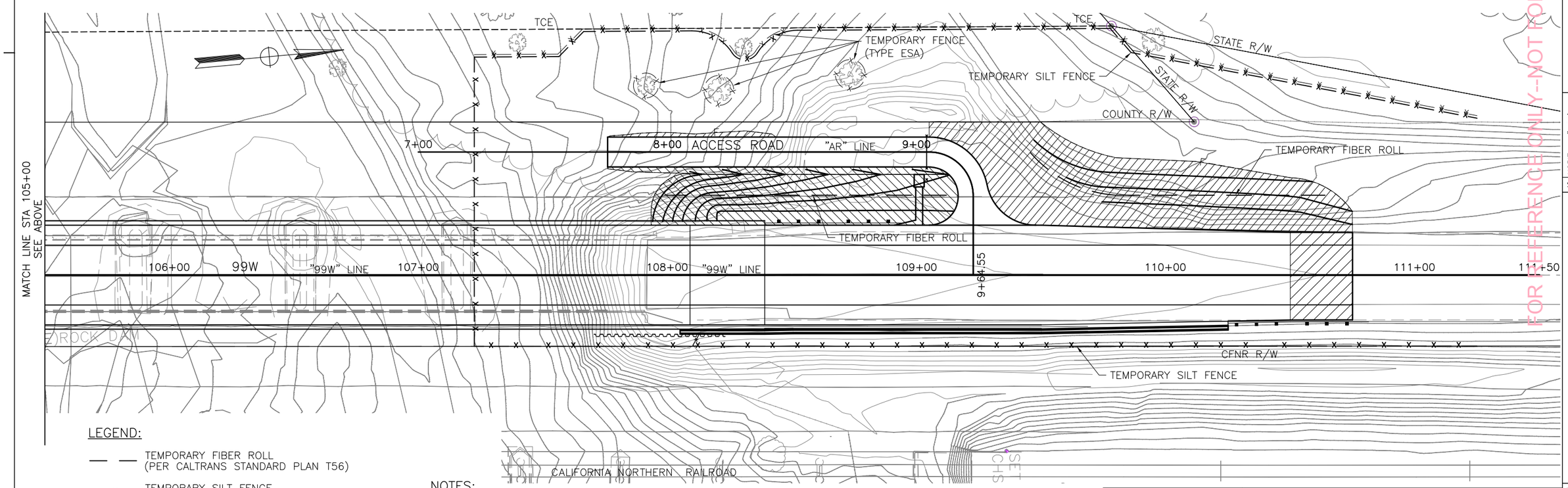


LEGEND:

- TEMPORARY FIBER ROLL (PER CALTRANS STANDARD PLAN T56)
- TEMPORARY SILT FENCE (PER CALTRANS STANDARD PLAN T51)
- TEMPORARY FENCE (TYPE ESA)
- EROSION CONTROL, HYDROSEED (FROM PROPOSED EP TO GRADING LIMITS)

NOTES:

1. TREES NOT DIRECTLY IMPACTED BY PROPOSED IMPROVEMENTS SHALL BE PROTECTED DURING CONSTRUCTION. TREE REMOVAL WITHIN STAGING AREAS IS PROHIBITED.

HDR

HDR Engineering, Inc.
2365 Iron Point Road, Suite 300 Folsom, CA 95630

REGISTERED CIVIL ENGINEER

REGISTERED PROFESSIONAL ENGINEER
HENRY H. LUU
No. 79780
Exp. 9-30-14
CIVIL
STATE OF CALIFORNIA

BRIDGE NO.
08C-0377

| No. | REVISION: | BY: | DATE: |
|---|---|---|---|
| | | | |

These drawings are instruments of service provided by the Tehama County Public Works Dept. and are not to be used for any type of construction unless signed and sealed by a Professional Engineer in the employ of the County of Tehama

FOR BIDDING PURPOSES

TEHAMA COUNTY PUBLIC WORKS

9380 San Benito Ave.
Gerber, Ca 96035
(530) 385-1462

COUNTY OF TEHAMA

| SCALE | |
|---|---|
| HORIZ: | 1"=20' |
| VERT: | |
| DRAWN BY: K. BURKE | |
| DATE: | 11/01/2013 |
| CHECKED BY: M. SHIPPEN | |
| DATE: | 7/16/2013 |

99W AT THOMES CREEK BRIDGE
PROJECT (REPLACE)
EROSION AND SEDIMENT CONTROL

FOR REFERENCE ONLY--NOT FOR BIDDING PURPOSES

PROJECT NO.: 14-370861

| SHEET NO. | PAGE NO. |
|---|---|
| EC-1 | 11/47 |

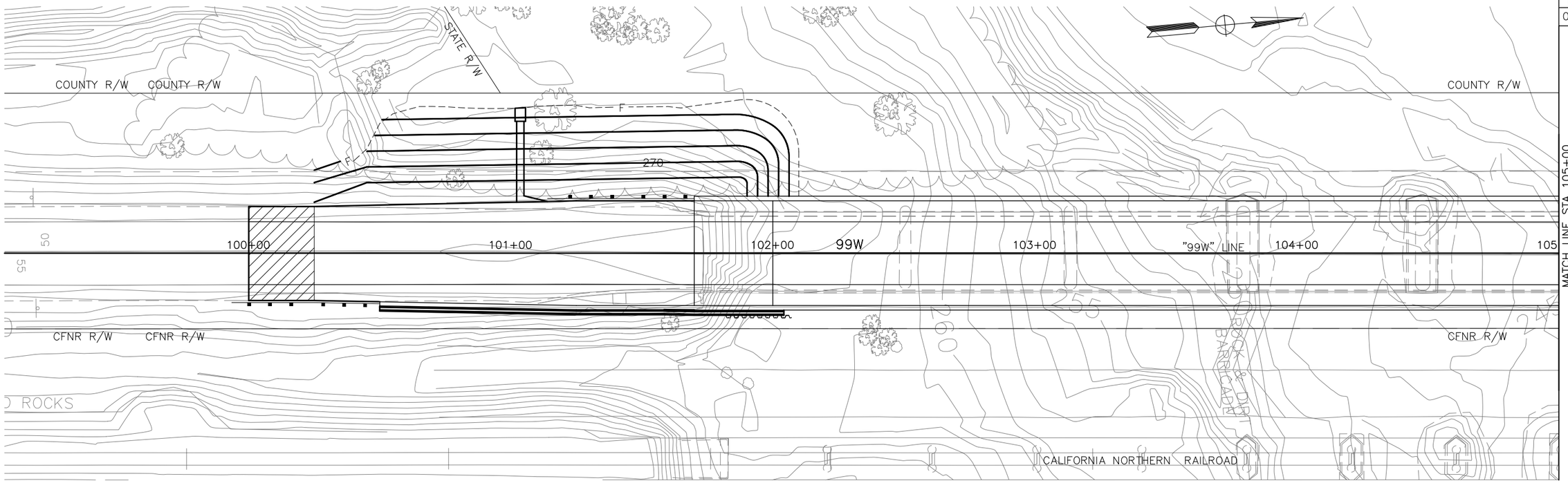


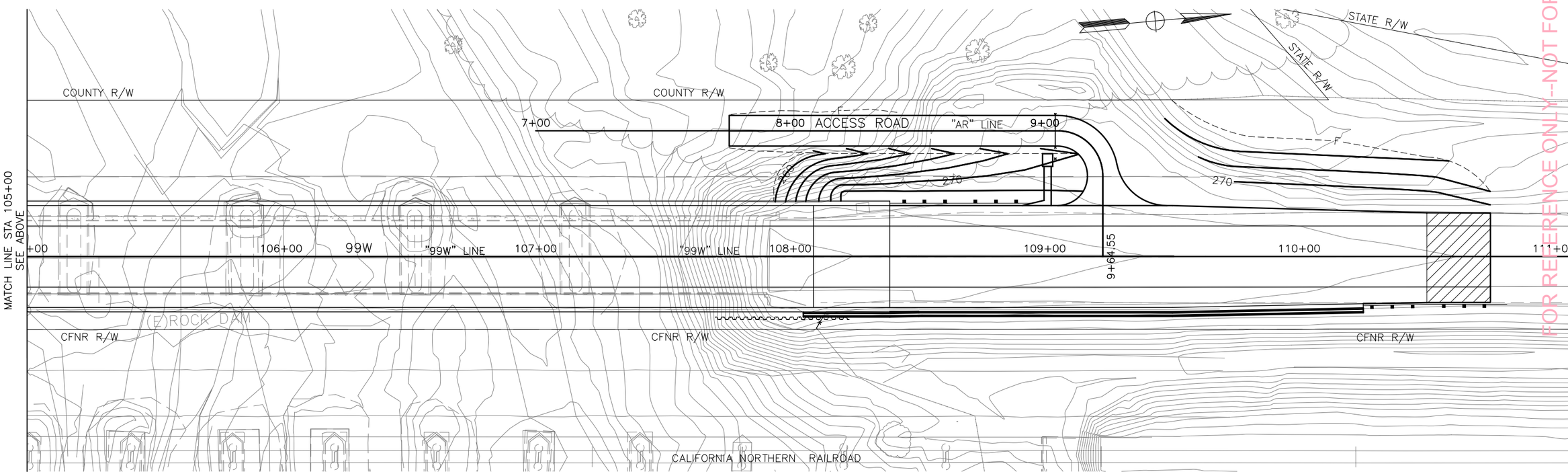


BRIDGE NO.
08C-0377

| No. | REVISION: | BY: | DATE: |
|---|---|---|---|
| | | | |

These drawings are instruments of service provided by the Tehama County Public Works Dept. and are not to be used for any type of construction unless signed and sealed by a Registered Engineer in the employ of the County of Tehama

FOR BIDDING PURPOSES

FOR REFERENCE ONLY--NOT FOR

TEHAMA COUNTY
PUBLIC WORKS

9380 San Benito Ave.
Gerber, Ca. 96035
(530) 385-1462

COUNTY OF TEHAMA

SCALE
HORIZ: 1"=20'
VERT:
DRAWN BY: J. KUSZ
DATE: 11/01/2013
CHECKED BY: M. SHIPPEN
DATE: 7/16/2013

# 99W AT THOMES CREEK BRIDGE PROJECT (REPLACE) CONTOUR GRADING

PROJECT NO.:
14-370861

HDR
HDR Engineering, Inc.
2365 Iron Point Road, Suite 300 Folsom, CA 95630

REGISTERED CIVIL ENGINEER

REGISTERED PROFESSIONAL ENGINEER
HENRY H. LUU
No. 79780
Exp. 9-30-14
CIVIL
STATE OF CALIFORNIA

| SHEET NO. | PAGE NO. |
|---|---|
| G-1 | 12/47 |

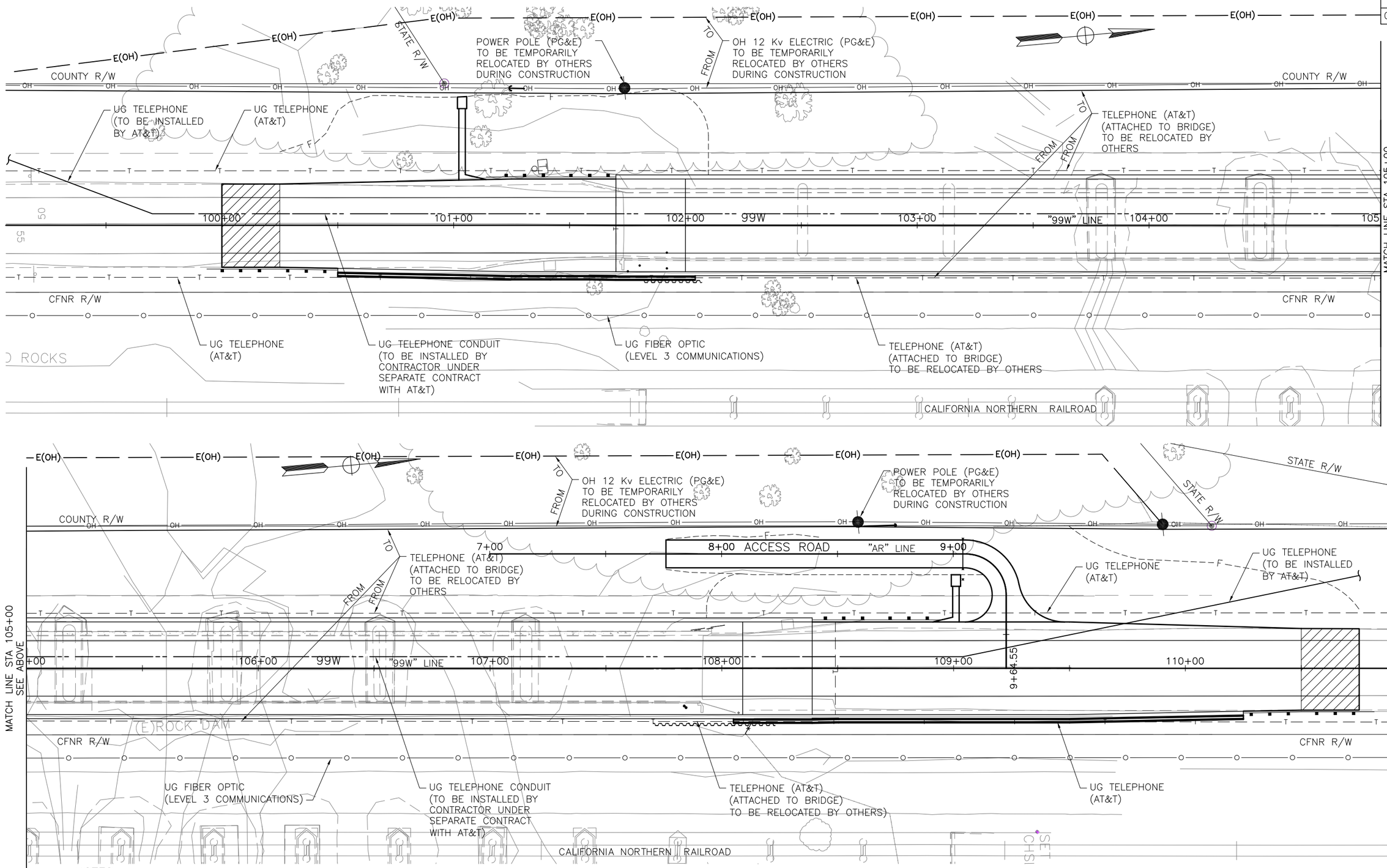


NOTES:

1. LOCATION OF ALL UTILITIES SHOWN ON THESE PLANS ARE APPROXIMATE AND SHALL BE VERIFIED BY THE CONTRACTOR PRIOR TO CONSTRUCTION. THE CONTRACTOR SHALL CONTACT USA (800-227-2600) AT LEAST 48 HOURS BEFORE BEGINNING OF WORK
2. ALL UTILITIES ARE EXISTING UNLESS OTHERWISE NOTED.

HDR

HDR Engineering, Inc.
2365 Iron Point Road, Suite 300 Folsom, CA 95630

REGISTERED CIVIL ENGINEER

REGISTERED PROFESSIONAL ENGINEER
HENRY H. LUU
No. 79780
Exp. 9-30-14
CIVIL
STATE OF CALIFORNIA

BRIDGE NO.
08C-0377

| No. | REVISION: | BY: | DATE: |
|---|---|---|---|
| | | | |

These drawings are instruments of service provided by the Tehama County Public Works Dept. and are not to be used for any type of construction unless signed and sealed by a Registered Civil Engineer in the employ of the County of Tehama

FOR REFERENCE ONLY-NOT FOR BIDDING PURPOSES

TEHAMA COUNTY PUBLIC WORKS

9380 San Benito Ave.
Gerber, Ca. 96035
(530) 385-1462

COUNTY OF TEHAMA

| SCALE | |
|---|---|
| HORIZ: | 1"=20' |
| VERT: | |
| DRAWN BY: J. KUSZ | DATE: 11/01/2013 |
| CHECKED BY: M. SHIPPEN | DATE: 7/16/2013 |

99W AT THOMES CREEK BRIDGE
PROJECT (REPLACE)
UTILITIES

PROJECT NO.: 14-370861

| SHEET NO. | PAGE NO. |
|---|---|
| U-1 | 13/47 |

BRIDGE NO. 08C-0377

NOTES: (FOR THIS SHEET ONLY)

1. EXACT LOCATION OF CONSTRUCTION AREA SIGNS TO BE DETERMINED BY THE ENGINEER.
2. PORTABLE CHANGEABLE MESSAGE SIGN LOCATIONS AND MESSAGE TO BE DETERMINED BY THE ENGINEER.

LEGEND:

- DIRECTION ARROW FOR DETOUR ROUTE
- CONSTRUCTION WORK AREA
- TEMPORARY ROADSIDE SIGN ONE–POST
- TEMPORARY ROADSIDE SIGN TWO–POST
- CONSTRUCTION ROADSIDE SIGN MOUNTED ON TYPE III BARRICADE
- * INSTALL TEMPORARY ROADSIDE SIGN
- PCMS PORTABLE CHANGEABLE MESSAGE SIGN
- PORTABLE FLASHING BEACON

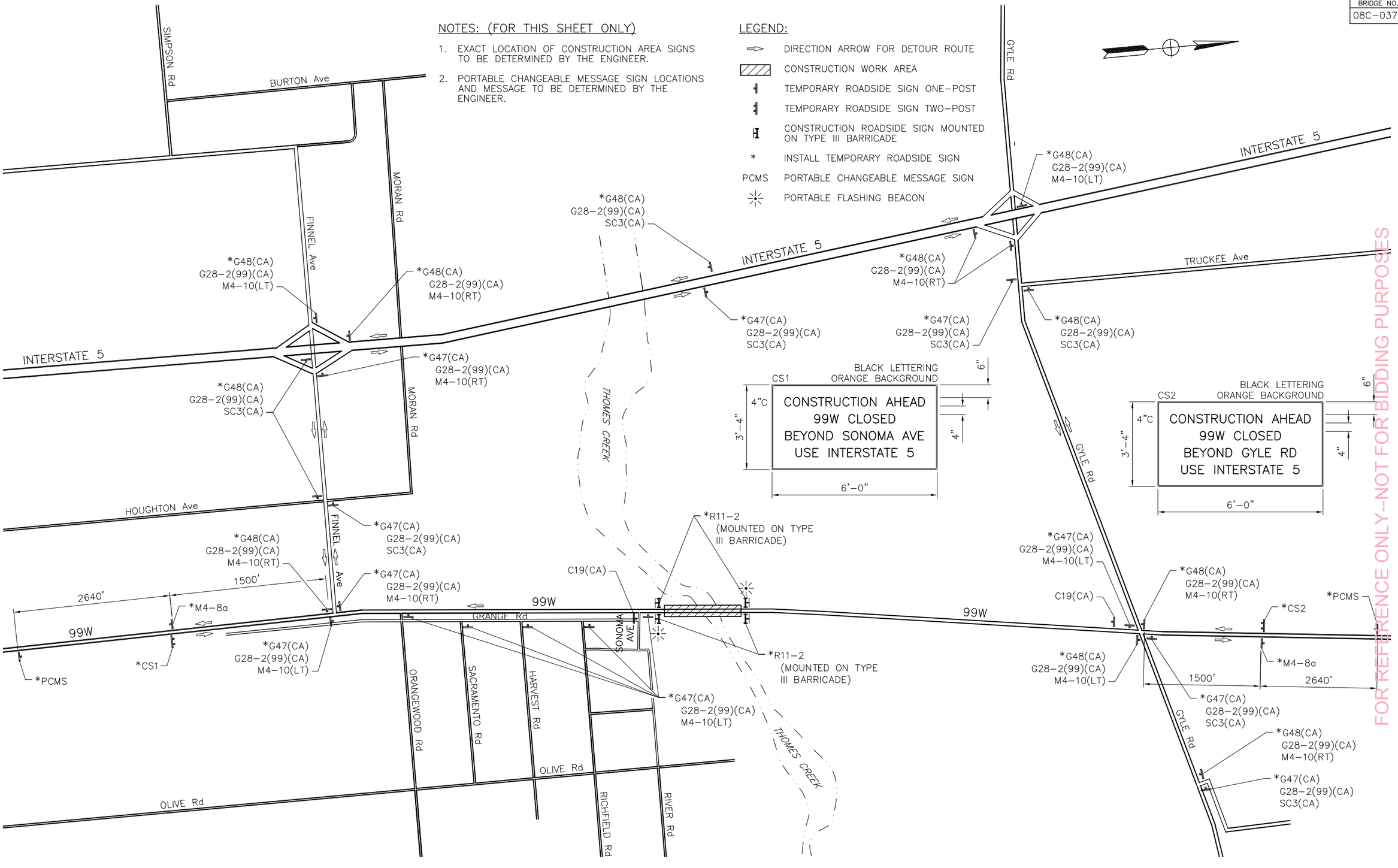


FOR REFERENCE ONLY–NOT FOR BIDDING PURPOSES

| No. | REVISION: | BY: | DATE: |
|---|---|---|---|
| | | | |

These drawings are instruments of service provided by the Tehama County Public Works Dept. and are not to be used for any type of construction unless signed and sealed by a Professional Engineer in the employ of the County of Tehama

TEHAMA COUNTY PUBLIC WORKS

9380 San Benito Ave.
Gerber, Ca. 96035
(530) 385–1462

HORIZ: NO SCALE
VERT:
SCALE
DRAWN BY: J. KUSZ DATE: 11/01/2013
CHECKED BY: M. SHIPPEN DATE: 7/16/2013

99W AT THOMES CREEK BRIDGE
PROJECT (REPLACE)
DETOUR PLAN

HDR
HDR Engineering, Inc.
2365 Iron Point Road, Suite 300 Folsom, CA 95630

REGISTERED CIVIL ENGINEER

REGISTERED PROFESSIONAL ENGINEER
HENRY H. LUU
No. 79780
Exp. 9–30–14
CIVIL
STATE OF CALIFORNIA

PROJECT NO.: 14–370861

| SHEET NO. | PAGE NO. |
|---|---|
| DE-1 | 14 / 47 |

## PAVEMENT STRUCTURE QUANTITIES SUMMARY

| STATION LIMITS | HOT MIX ASPHALT (TYPE A) | CLASS 2 AGGREGATE BASE | COLD PLANE ASPHALT CONCRETE PAVEMENT | TACK COAT |
|---|---|---|---|---|
| | TON | CY | SQYD | TON |
| "99W" 100+00.00 TO "99W" 101+70.00 | 224 | 343 | 100 | 0.4 |
| "99W" 108+39.00 TO "99W" 110+75.00 | 320 | 502 | 100 | 0.7 |
| "AR" 7+76.00 TO "99W" 9+44.55 | | 130 | | |
| HMA DIKE | 4 | | | |
| OVERSIDE DRAIN | 3 | | | |
| TOTAL | 551 | 975 | 200 | 1.1 |

## PLACE HOT MIX ASPHALT DIKE

| STATION LIMITS | TYPE C | TYPE F | HOT MIX ASPHALT (TYPE A) |
|---|---|---|---|
| | LF | LF | TON |
| "99W" 101+14.00 TO "99W" 101+70.00 | 31 | 25 | 2 |
| "99W" 108+39.00 TO "99W" 108+91.01 | 27 | 25 | 2 |
| TOTAL | 58 | 50 | 4* |

* QUANTITY INCLUDED IN PAVEMENT STRUCTURE QUANTITIES SUMMARY

## PLACE HOT MIX ASPHALT (Misc AREA)

| STATION LIMITS | PLACE HMA (Misc AREA) | HOT MIX ASPHALT (TYPE A) |
|---|---|---|
| | SQYD | TON |
| "99W" 101+14.00, Lt | 11 | 2 |
| "99W" 109+91.01, Lt | 6 | 1 |
| TOTAL | 17 | 3* |

* QUANTITY INCLUDED IN PAVEMENT STRUCTURE QUANTITIES SUMMARY

## CONCRETE BARRIER

| STATION LIMITS | CONCRETE BARRIER (TYPE 60C Mod) |
|---|---|
| | LF |
| "99W" 100+50.00 TO "99W" 101+70.00 | 120 |
| "99W" 108+39.00 TO "99W" 110+25.00 | 186 |
| TOTAL | 306 |

## EARTHWORK QUANTITIES SUMMARY

| STATION LIMITS/ LOCATION | ROADWAY EXCAVATION | EMBANKMENT (N) |
|---|---|---|
| | CY | CY |
| "99W" 100+00.00 TO "99W" 101+70.00 | 484 | 423 |
| "99W" 108+09.00 TO "99W" 110+75.00 INCLUDES ("AR" 7+76.00 TO "99W" 9+62.13) | 1086 | 145 |
| TOTAL | 1570 | 568 |

## MIDWEST GUARDRAIL SYSTEM (WOOD POST)

| STATION LIMITS | TRANSITION RAILING (TYPE STB) | TRANSITION RAILING (TYPE WB-31) | ALTERNATIVE IN-LINE TERMINAL SYSTEM |
|---|---|---|---|
| | EA | EA | EA |
| "99W" 101+14.00 TO "99W" 101+70.00 Lt | | 1 | 1 |
| "99W" 99+94.00 TO "99W" 100+50.00 Rt | 1 | | 1 |
| "99W" 108+39.00 TO "99W" 108+95.00 Lt | | 1 | 1 |
| "99W" 110+25.00 TO "99W" 110+81.00 Rt | 1 | | 1 |
| TOTAL | 2 | 2 | 4 |

## TEMPORARY WATER POLLUTION CONTROL

| STATION | TEMPORARY FIBER ROLL | TEMPORARY SILT FENCE | TEMPORARY CONSTRUCTION ENTRANCE | TEMPORARY CONCRETE WASHOUT |
|---|---|---|---|---|
| | LF | LF | EA | EA |
| "99W" 99+50.00 TO "99W" 103+00.00 | 362 | 679 | 1 | 2 |
| "99W" 107+00.00 TO "99W" 111+25.00 | 238 | 941 | 1 | 2 |
| TOTAL | 600 | 1620 | 2 | 4 |

## MINOR CONCRETE

| STATION LIMITS | GUTTER |
|---|---|
| | CY |
| "99W" 100+50.00 TO "99W" 102+04.23 | 6 |
| "99W" 108+05.00 TO "99W" 110+25.00 | 8 |
| TOTAL | 14 |

## EXISTING FENCE REPLACEMENT

| STATION | TYPE WM FENCE |
|---|---|
| | LF |
| "99W" 108+09.00 TO "99W" 108+12.71 RT | 6 |
| "99W" 109+17.23 TO "99W" 110+10.55 LT | 94 |
| TOTAL | 100 |

## ACCESS CONTROL GATE

| STATION LIMITS | EA |
|---|---|
| "AR" 9+04.12 | 1 |
| TOTAL | 1 |

FOR REFERENCE ONLY-NOT FOR BIDDING PURPOSES

BRIDGE NO. 08C-0377

| No. | REVISION: | BY: | DATE: |
|---|---|---|---|
| | | | |

These drawings are instruments of service provided by the Tehama County Public Works Dept. and are not to be used for any type of construction unless signed and sealed by a Professional Engineer in the employ of the County of Tehama

TEHAMA COUNTY PUBLIC WORKS
9380 San Benito Ave.
Gerber, Ca. 96035
(530) 385-1462

HORIZ: NO SCALE
VERT:
SCALE
DRAWN BY: J. KUSZ DATE: 11/01/2013
CHECKED BY: M. SHIPPEN DATE: 7/16/2013

99W AT THOMES CREEK BRIDGE
PROJECT (REPLACE)
QUANTITIES

HDR
HDR Engineering, Inc.
2365 Iron Point Road, Suite 300 Folsom, CA 95630

REGISTERED CIVIL ENGINEER

REGISTERED PROFESSIONAL ENGINEER HENRY H. LUU No. 79780 Exp. 9-30-14 CIVIL STATE OF CALIFORNIA

PROJECT NO.: 14-370861

SHEET NO. Q-1 PAGE NO. 15/47

## HYDROSEED

| LOCATION | HYDROSEED | STRAW (N) | FIBER (N) | SEED (N) | COMMERCIAL FERTILIZER (N) | TACKIFIER (N) |
|---|---|---|---|---|---|---|
| | SQFT | TON | LBS | LBS | LBS | LBS |
| "99W" 107+00.00 TO "99W" 111+25.00 | 6725 | 0.49 | 480 | 10.5 | 216.2 | 2.6 |
| "AR" 7+76.00 TO "AR" 9+44.55 | 480 | 0.03 | 31 | 0.7 | 13.7 | 40.4 |
| TOTAL | 7205 | | | | | |

## TEMPORARY HYDRAULIC MULCH

| LOCATION | TEMPORARY HYDRAULIC MULCH |
|---|---|
| | SQYD |
| "99W" 100+00.00 TO "99W" 103+00.00 | 768 |
| "99W" 107+90.00 TO "99W" 111+25.00 | 749 |
| "AR" 7+76.00 TO "AR" 9+44.55 | 53 |
| TOTAL | 1570 |

## TEMPORARY FENCE (TYPE ESA)

| STATION | LF |
|---|---|
| "99W" 99+50.00 TO "99W" 103+00.00 | 460 |
| "99W" 107+00.00 TO "99W" 111+25.00 | 530 |
| TOTAL | 990 |

## DRAINAGE QUANTITIES

| STATION | ROCK SLOPE PROTECTION (BACKING No. 2, METHOD B) | ROCK SLOPE PROTECTION FABRIC (CLASS 8) |
|---|---|---|
| | CY | SQYD |
| "99W" 101+03.61, Lt | 2 | 12 |
| "99W" 109+01.01, Lt | 2 | 12 |
| TOTAL | 4 | 24 |

## DETOUR SIGNS QUANTITIES

| SIGN CODE | PANEL SIZE | POST SIZE | | | | No. OF POSTS | | No. OF SIGNS | TYPE III BARRICADE | PORTABLE FLASHING BEACON |
|---|---|---|---|---|---|---|---|---|---|---|
| | | | | | | ONE POST | TWO POST | | | |
| | in x in | 4"x4" | 4"x6" | 6"x6" | 6"x8" | EA | EA | EA | EA | EA |
| G48(CA)<br>G28-2(99)(CA)<br>M4-10(R†) | 30x15<br>24x25<br>48x18 | | X | | | 1 | | 7 | | |
| G48(CA)<br>G28-2(99)(CA)<br>M4-10(L†) | 30x15<br>24x25<br>48x18 | | X | | | 1 | | 3 | | |
| G48(CA)<br>G28-2(99)(CA)<br>SC3(CA) | 30x15<br>24x25<br>36x12 | | X | | | 1 | | 4 | | |
| G47(CA)<br>G28-2(99)(CA)<br>M4-10(R†) | 30x15<br>24x25<br>48x18 | | X | | | 1 | | 2 | | |
| G47(CA)<br>G28-2(99)(CA)<br>M4-10(L†) | 30x15<br>24x25<br>48x18 | | X | | | 1 | | 7 | | |
| G47(CA)<br>G28-2(99)(CA)<br>SC3(CA) | 30x15<br>24x25<br>36x12 | | X | | | 1 | | 5 | | |
| C19(CA) | 48x48 | | | X | | 1 | | 2 | | |
| PCMS | | | | | | | | 2 | | |
| CS1 | | | X | | | | 1 | 2 | | |
| R11-2 | 48x30 | | | | | | | | 4 | |
| M4-8a | 24x18 | X | | | | 1 | | 2 | | |
| | | | | | | | | | | 2 |

## DELINEATOR - MARKERS

| LOCATION | OBJECT MARKER (TYPE L) | GUARD RAILING DELINEATOR (TYPE F) |
|---|---|---|
| | EA | EA |
| "99W" 99+91.50, Rt | 1 | |
| "99W" 108+96.00, Lt | 1 | |
| "99W" 101+45.00, Lt | | 1 |
| "99W" 100+24.96, Rt | | 1 |
| "99W" 108+64.00, Lt | | 1 |
| "99W" 110+50.00, Rt | | 1 |
| TOTAL | 2 | 4 |

## PAVEMENT DELINEATION QUANTITIES

| LOCATION | DETAIL NO. | PAVEMENT MARKER (RETROREFLECTIVE) | THERMOPLASTIC TRAFFIC STRIPE | THERMOPLASTIC TRAFFIC STRIPE |
|---|---|---|---|---|
| | | TYPE D YELLOW (TWO-WAY) | 4" SOLID YELLOW | 4" SOLID WHITE |
| | | EA | LF | LF |
| "99W" LINE | 22 | 90 | 2150 | |
| "99W" LINE | 27B | | | 2150 |
| TOTAL | | 90 | 2150 | 2150 |

FOR REFERENCE ONLY--NOT FOR BIDDING PURPOSES

BRIDGE NO. 08C-0377

| No. | REVISION: | BY: | DATE: |
|---|---|---|---|

These drawings are instruments of service provided by the Tehama County Public Works Dept. and are not to be used for any type of construction unless signed and sealed by a Professional Engineer in the employ of the County of Tehama

TEHAMA COUNTY PUBLIC WORKS
9380 San Benito Ave.
Gerber, Ca 96035
(530) 385-1462

COUNTY OF TEHAMA

SCALE: HORIZ: NO SCALE VERT:
DRAWN BY: J. KUSZ DATE: 11/01/2013
CHECKED BY: M. SHIPPEN DATE: 7/16/2013

99W AT THOMES CREEK BRIDGE
PROJECT (REPLACE)
QUANTITIES

HDR
HDR Engineering, Inc.
2365 Iron Point Road, Suite 300 Folsom, CA 95630

REGISTERED CIVIL ENGINEER

REGISTERED PROFESSIONAL ENGINEER
HENRY H. LUU
No. 79780
Exp. 9-30-14
CIVIL
STATE OF CALIFORNIA

PROJECT NO.: 14-370861

SHEET NO. Q-2
PAGE NO. 16/47

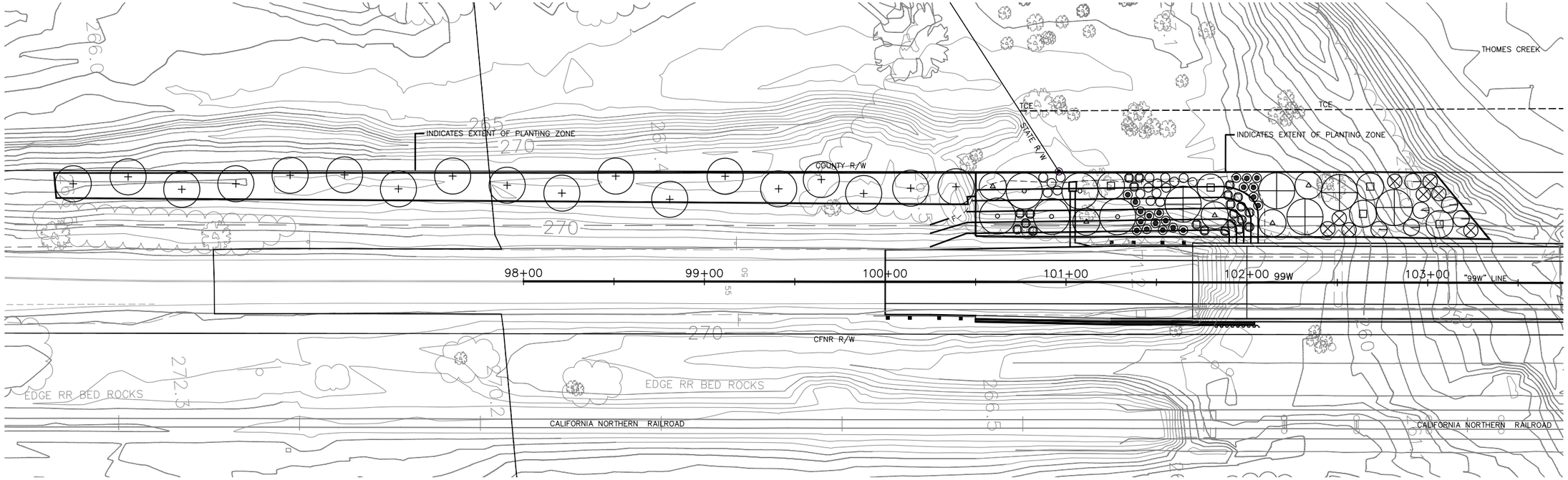


| SYMBOL | PLANTING LEGEND | | | | | | |
|---|---|---|---|---|---|---|---|
| | SCIENTIFIC NAME | COMMON NAME | SIZE | ZONE | MINIMUM NUMBER/ACRE | QUANTITY | NOTES |
| ○ | Acer negundo var. californicum | Box Elder | 5 gallon | Riparian | 5 | 5 | |
| + | Quercus lobata | Valley Oak | 5 gallon | Riparian and Tree Replacement | 3x those removed | 18 | 30 feet (between trees)<br>10 feet (from edge of roads/travel ways and fences) |
| ● | Rosa californica | Wild Rose | 1 gallon | Floodplain/Riparian | 15 | 20 | |
| ◯ | Rubus ursinus | California Blackberry | 1 gallon | Floodplain/Riparian | 25 | 17 | |
| ⊗ | Salix exigua | Narrow-leaved Willow | Cutting | Floodplain/Riparian | 25 | 8 | |
| ⊕ | Salix gooddingii | Goodling's Black Willow | Cutting | Floodplain/Riparian | 25 | 5 | |
| □ | Salix laevigata | Red Willow | Cutting | Floodplain/Riparian | 25 | 5 | |
| △ | Salix lasiolepis | Arroyo Willow | Cutting | Floodplain/Riparian | 25 | 5 | |
| ⊖ | Salix lucida ssp. lasiandra | Shinning Willow | Cutting | Floodplain/Riparian | 25 | 6 | |
| ▢ | Vitus californica | California Wild Grape | 1 gallon | Floodplain/Riparian | 5 | 22 | |

## GENERAL NOTES:

1. VERIFY EXISTING CONDITIONS AND UTILITY LOCATIONS PRIOR TO DIGGING
2. CONTRACTOR TO VERIFY PLANTING AREA IS FREE OF DEBRIS, ROCK, AND RUBBISH PRIOR TO INSTALLING MATERIALS
3. IT IS THE CONTRACTOR'S RESPONSIBILITY TO FURNISH PLANT MATERIALS FREE OF PESTS, DISEASE, AND EXOTIC SPECIES
4. PLANT SPECIES SUBSTITUTIONS TO BE APPROVED BY THE PROJECT BIOLOGIST; NOTIFY PROJECT BIOLOGIST IF UNABLE TO SOURCE PLANTS AS SPECIFIED
5. SHOULD A CONFLICT ARISE BETWEEN THE SIZE OF AREAS AND THOSE SHOWN ON PLAN, IT IS THE CONTRACTOR'S RESPONSIBILITY TO NOTIFY THE PROJECT BIOLOGIST; FAILURE TO DO SO RESULTS IN THE CONTRACTOR'S RESPONSIBILITY TO FURNISH OR RELOCATE ADDITIONAL MATERIALS AT THE CONTRACTOR'S EXPENSE
6. REFER TO SPECIFICATIONS FOR WEEDING, MAINTENANCE, AND MONITORING CRITERIA
7. SEE SHEET XX FOR PLANTING DETAILS

FOR REFERENCE ONLY--NOT FOR BIDDING PURPOSES

HDR

HDR Engineering, Inc.
2365 Iron Point Road, Suite 300 Folsom, CA 95630

REGISTERED CIVIL ENGINEER

LICENSED LANDSCAPE ARCHITECT
GARY LAI LIC. #4054
Signature
December 31, 2015
Renewal Date
Date
STATE OF CALIFORNIA

BRIDGE NO.
08C-0377

| No. | REVISION: | BY: | DATE: |
|---|---|---|---|
| | | | |

These drawings are instruments of service provided by the Tehama County Public Works Dept. and are not to be used for any purpose of construction unless signed and sealed by a Professional Civil Engineer in the employ of the County of Tehama

TEHAMA COUNTY PUBLIC WORKS
9380 San Benito Ave.
Gerber, Ca. 96035
(530) 385-1462

COUNTY OF TEHAMA

SCALE
HORIZ: 1"=30'
VERT:
DRAWN BY: H. HABIG
DATE: 11/01/2013
CHECKED BY: M. SHIPPEN
DATE: 7/16/2013

99W AT THOMES CREEK BRIDGE
PROJECT (REPLACE)
PLANTING PLAN

PROJECT NO.: 14-370861

| SHEET NO. | PAGE NO. |
|---|---|
| PP-1 | 17/47 |

FOLIAGE PROTECTOR NOTES:
1. INSTALL WITHIN 2 DAYS OF PLANTING VERTICALLY AND CENTERED OVER PLANT AS SHOWN
2. CYLINDER MUST BE SNUG AGAINST THE STAKES BUT LOOSE ENOUGH TO BE RAISED FOR PESTICIDE APPLICATION OR TO PERFORM WEEDING WITHIN THE PLANT BASIN
3. INSTALL JUTE MESH COVER OVER PROTECTOR AND SECURE WITH TWINE

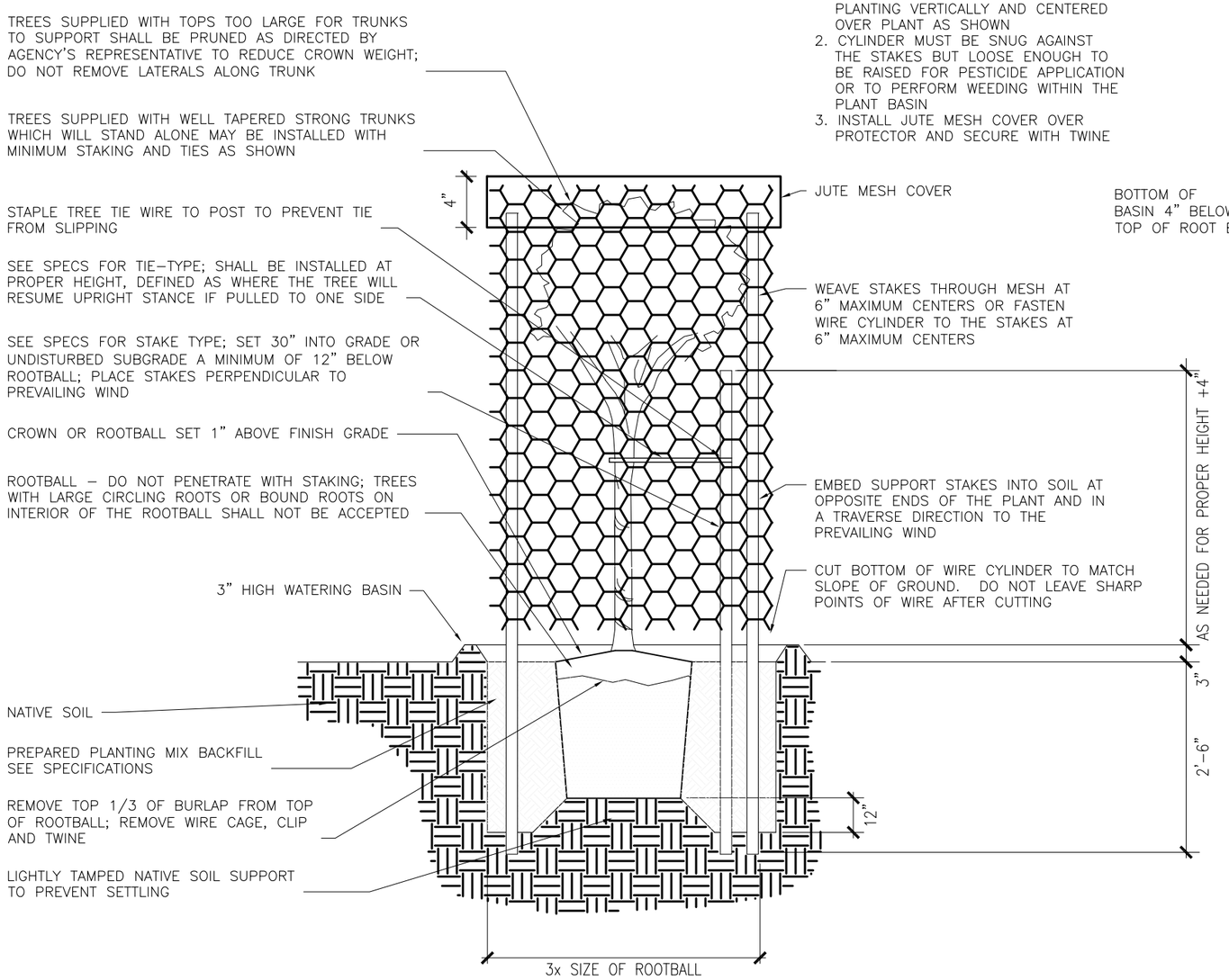


1 / PP TREE PLANTING AND FOLIAGE PROTECTOR DETAIL

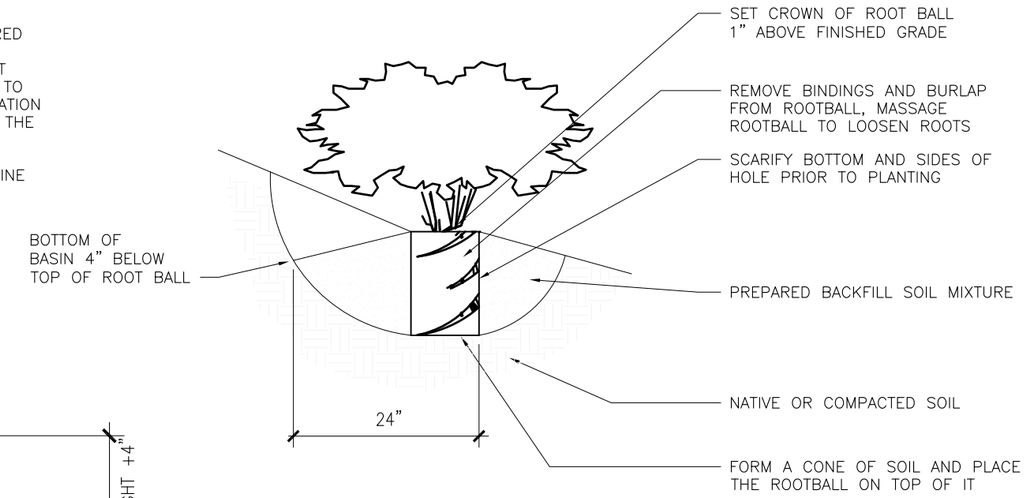


1 / PP SHRUB PLANTING ON SLOPE DETAIL

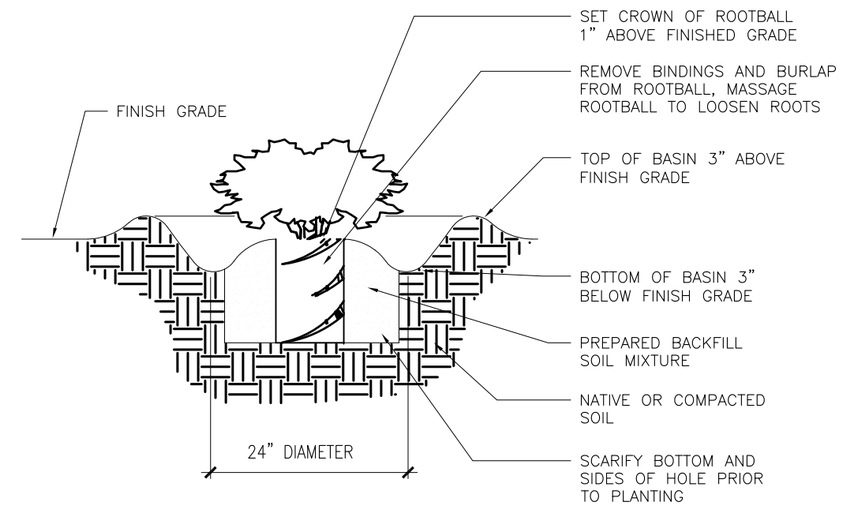


1 / PP SHRUB PLANTING DETAIL

FOR REFERENCE ONLY--NOT FOR BIDDING PURPOSES

| No. | REVISION: | BY: | DATE: |
|---|---|---|---|
| | | | |

These drawings are instruments of service provided by the Tehama County Public Works Dept. and are not to be used for any type of construction unless signed and sealed by a Professional Engineer in the employ of the County of Tehama

TEHAMA COUNTY PUBLIC WORKS
9380 San Benito Ave.
Gerber, Ca. 96035
(530) 385-1462

HORIZ: NO SCALE
VERT:
SCALE
DRAWN BY: H. HABIG
DATE: 11/01/2013
CHECKED BY: M. SHIPPEN
DATE: 7/16/2013

99W AT THOMES CREEK BRIDGE PROJECT (REPLACE)
PLANTING DETAILS

PROJECT NO.: 14-370861

HDR
HDR Engineering, Inc.
2365 Iron Point Road, Suite 300 Folsom, CA 95630

REGISTERED CIVIL ENGINEER

LICENSED LANDSCAPE ARCHITECT
GARY LAI LIC. #LA4658
Signature
December 31, 2015
Renewal Date
Date
STATE OF CALIFORNIA

SHEET NO. PP-2
PAGE NO. 18 / 47

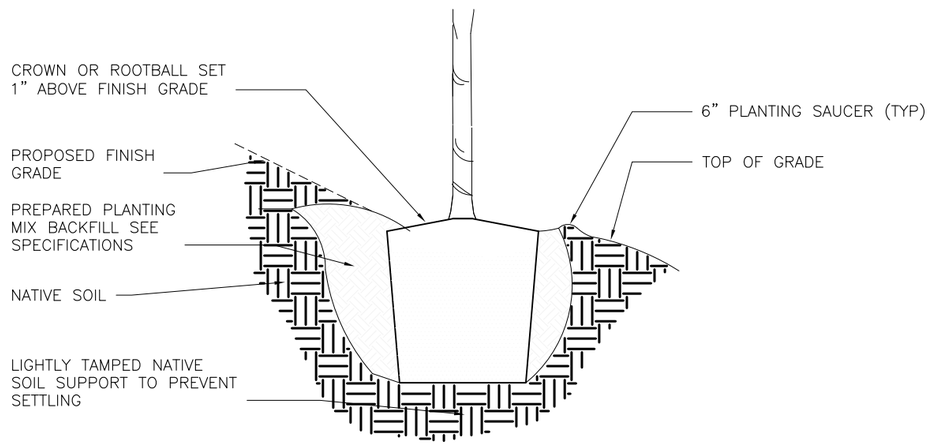


1 / PP TREE PLANTING ON SLOPE DETAIL

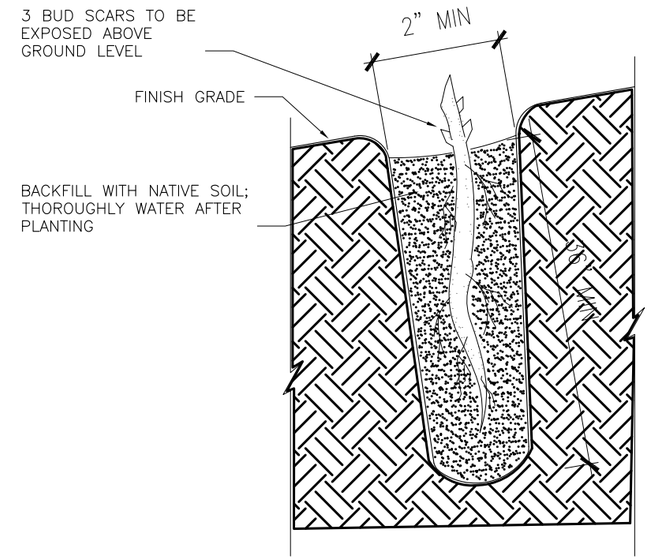


1 / PP CUTTINGS DETAIL

BRIDGE NO.
08C-0377

| No. | REVISION: | BY: | DATE: |
|---|---|---|---|
| | | | |

These drawings are instruments of service provided by the Tehama County Public Works Dept. and are not to be used for any type of construction unless signed and sealed by a Professional Engineer in the employ of the County of Tehama

TEHAMA COUNTY
PUBLIC WORKS
9380 San Benito Ave.
Gerber, Ca. 96035
(530) 385-1462

FOR REFERENCE ONLY-NOT FOR BIDDING PURPOSES

SCALE
HORIZ: NO SCALE
VERT:
DRAWN BY: H. HABIG
DATE: 11/01/2013
CHECKED BY: M. SHIPPEN
DATE: 7/16/2013

99W AT THOMES CREEK BRIDGE
PROJECT (REPLACE)
PLANTING DETAILS

HDR
HDR Engineering, Inc.
2365 Iron Point Road, Suite 300 Folsom, CA 95630

REGISTERED CIVIL ENGINEER

LICENSED LANDSCAPE ARCHITECT
GARY LAI LIC #LA4052
Signature
December 31, 2015
Renewal Date
Date
STATE OF CALIFORNIA

PROJECT NO.: 14-370861

| SHEET NO. | PAGE NO. |
|---|---|
| PP-3 | 19 / 47 |

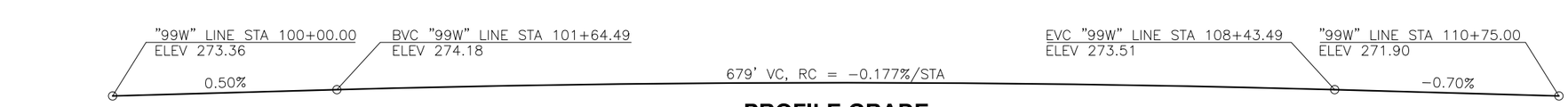


## PROFILE GRADE

NO SCALE

NOTE:
EXISTING BRIDGE NOT SHOWN IN ELEVATION FOR CLARITY. SEE "DEMOLITION DETAILS" SHEET FOR DETAILS.

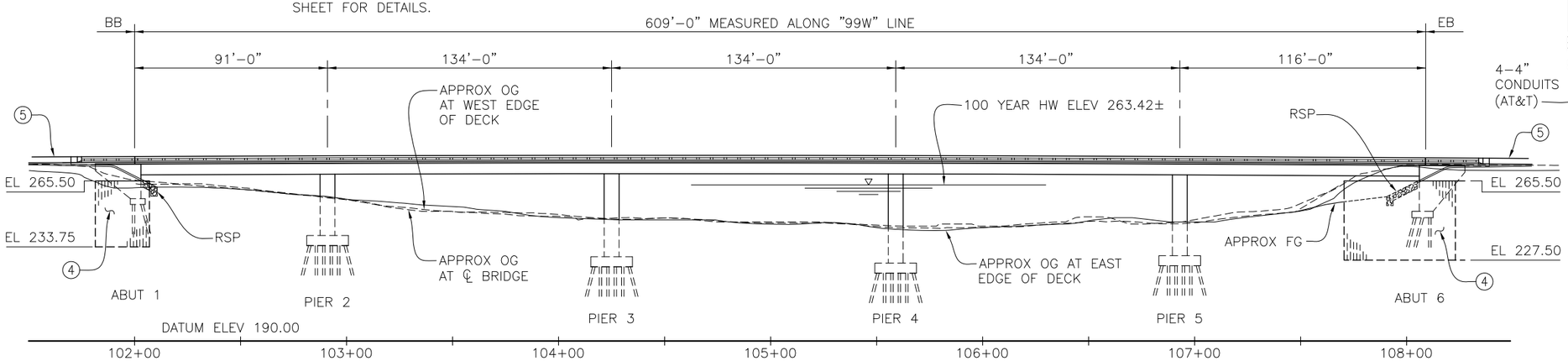


## ELEVATION

1" = 30'

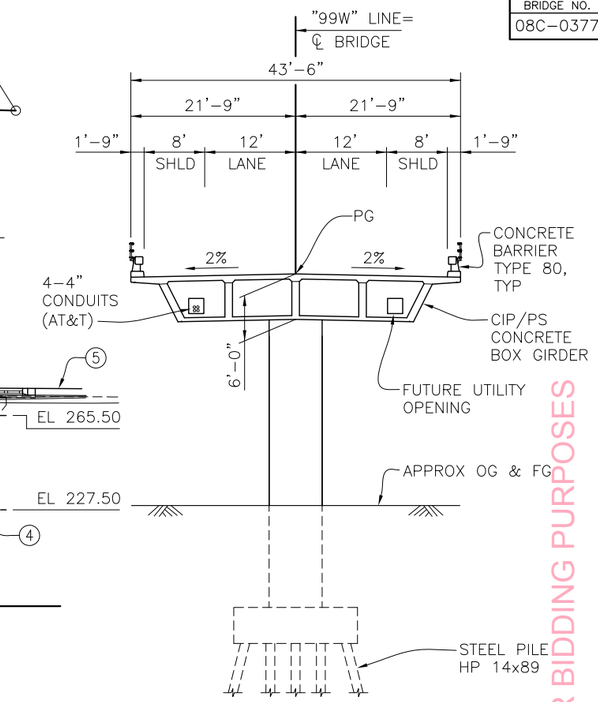


## TYPICAL SECTION

1" = 10'

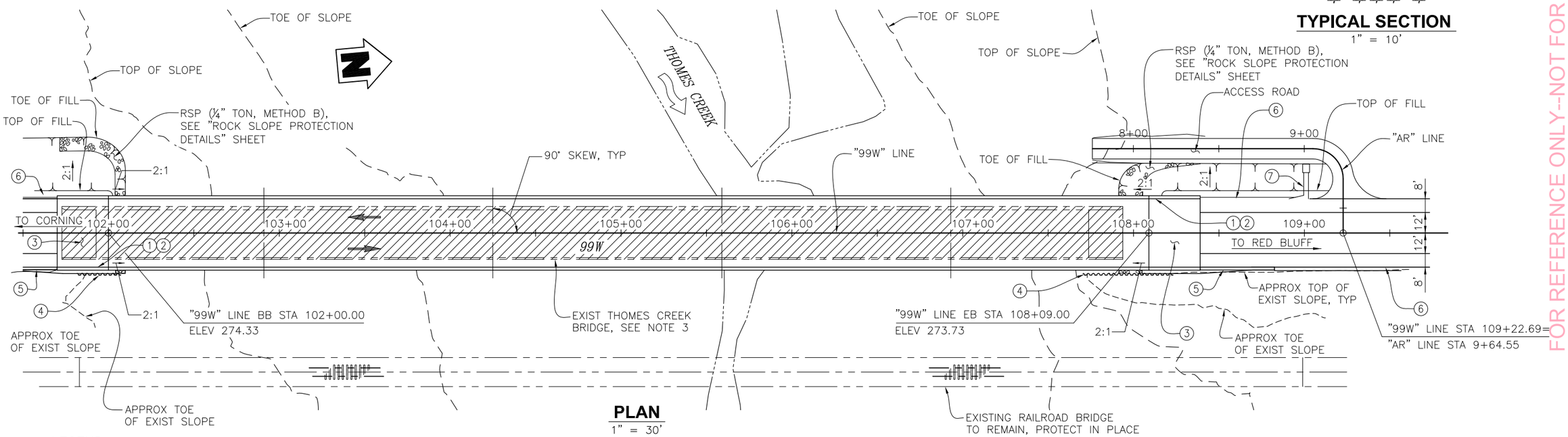


## PLAN

1" = 30'

LEGEND:

1. PAINT "BR. NO. 08C−0377".
2. PAINT "99W AT THOMES CREEK".
3. STRUCTURE APPROACH TYPE N(30S).
4. PZ27 SHEET PILE RETAINING WALL.
5. CONCRETE BARRIER TYPE 60C (MOD), SEE "ROAD PLANS".
6. MIDWEST GUARDRAIL SYSTEM AND TERMINAL SYSTEM, SEE "ROAD PLANS".
7. OVERSIDE DRAIN, SEE "ROAD PLANS".

——— INDICATES NEW STRUCTURE.
– – – – INDICATES EXISTING FEATURES.
▨ INDICATES REMOVE EXISTING STRUCTURE.

NOTES:

1. THE CONTRACTOR SHALL VERIFY ALL CONTROLLING FIELD DIMENSIONS BEFORE ORDERING OR FABRICATING ANY MATERIALS.
2. FOR HYDROLOGIC SUMMARY TABLE, SEE "FOUNDATION PLAN NO. 1" SHEET.
3. EXISTING THOMES CREEK BRIDGE (BRIDGE NO. 8C−110) TO BE REMOVED, SEE "DEMOLITION DETAILS" SHEET FOR ADDITIONAL INFORMATION.
4. FOR INDEX TO PLANS, QUANTITIES AND GENERAL NOTES, SEE "INDEX TO PLANS" SHEET.
5. FOR PILE DATA TABLE AND SURVEY CONTROL, SEE "FOUNDATION PLAN NO. 1" SHEET.


HDR
HDR Engineering, Inc.
2365 Iron Point Road, Suite 300 Folsom, CA 95630


Titus Keng
REGISTERED CIVIL ENGINEER

REGISTERED PROFESSIONAL ENGINEER
TITUS KENG
No. 45226
Exp. 9−30−14
CIVIL
STATE OF CALIFORNIA

BRIDGE NO.
08C−0377

| No. | REVISION: | BY: | DATE: |
|---|---|---|---|
| | | | |

These drawings are instruments of service provided by the Tehama County Public Works Dept. and are not to be used for any purpose of construction unless signed and sealed by a Registered Civil Engineer in the employ of the County of Tehama

FOR REFERENCE ONLY-NOT FOR BIDDING PURPOSES


TEHAMA COUNTY PUBLIC WORKS
9380 San Benito Ave.
Gerber, Ca. 96035
(530) 385−1462


| SCALE | |
|---|---|
| HORIZ: AS SHOWN | |
| VERT: AS SHOWN | |
| DRAWN BY: J. VOUGHT | |
| DATE: 11/01/2013 | |
| CHECKED BY: S. KOTAMALA | |
| DATE: 7/16/2013 | |

# 99W AT THOMES CREEK BRIDGE PROJECT (REPLACE) GENERAL PLAN

PROJECT NO.: 14−370861

| SHEET NO. | PAGE NO. |
|---|---|
| S-1 | 20/47 |

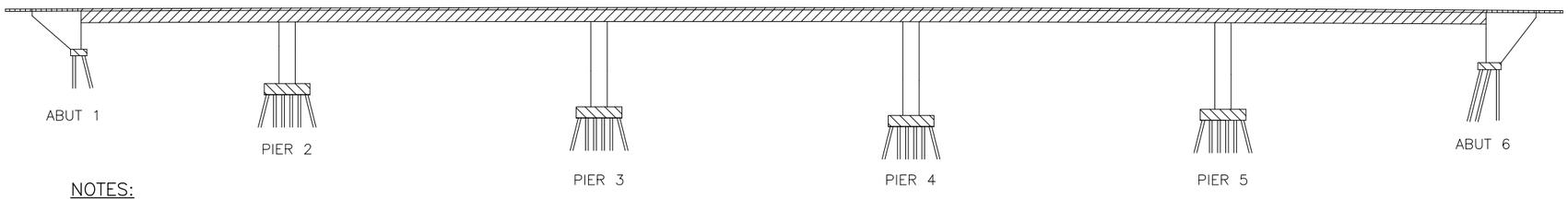


NOTES:

- STRUCTURAL CONCRETE, BRIDGE (f'c = 3.6 KSI @ 28 DAYS)
- STRUCTURAL CONCRETE, BRIDGE (f'c = 4.0 KSI @ 28 DAYS)
- STRUCTURAL CONCRETE, BRIDGE FOOTING (f'c = 3.6 KSI @ 28 DAYS)
- STRUCTURAL CONCRETE, STRUCTURE APPROACH (f'c = 3.6 KSI @ 28 DAYS)

## CONCRETE STRENGTH AND TYPE LIMITS

NO SCALE

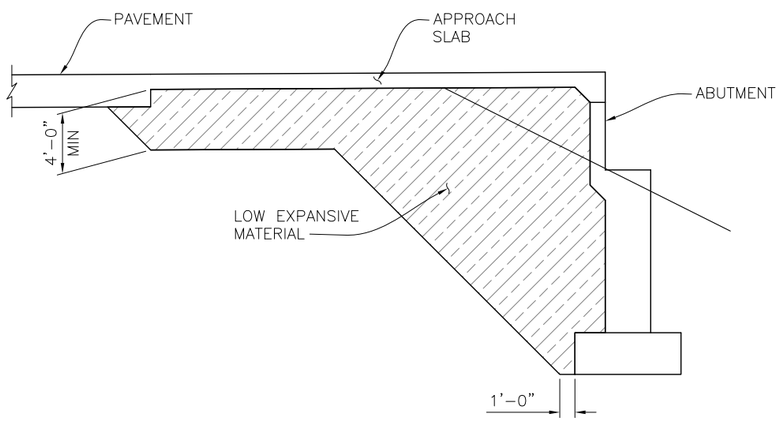


## EXPANSIVE SOIL EXCLUSION ZONE IN BRIDGE EMBANKMENT

NO SCALE

QUANTITIES:

| | | |
|---|---|---|
| BRIDGE REMOVAL | LS | 1 |
| STRUCTURE EXCAVATION (BRIDGE) | CY | 765 |
| STRUCTURE EXCAVATION (TYPE D) | CY | 1,192 |
| SACKED CONCRETE PCC RIP-RAP EXCAVATION | LS | 1 |
| STRUCTURE BACKFILL (BRIDGE) | CY | 1,321 |
| FURNISH PILING (HP14X89) | LF | 12,540 |
| DRIVE PILE (HP14X89) | EA | 145 |
| STEEL SHEET PILING | SF | 3000 |
| PRESTRESSED CAST IN PLACE CONCRETE | LS | 1 |
| STRUCTURAL CONCRETE, BRIDGE FOOTING | CY | 333 |
| STRUCTURAL CONCRETE, BRIDGE | CY | 2,229 |
| STRUCTURAL CONCRETE, APPROACH SLAB TYPE N | CY | 102 |
| PTFE/ELASTOMERIC BEARING ASSEMBLY | EA | 10 |
| JOINT SEAL ASSEMBLY (MR=4.5") | LF | 85 |
| BAR REINFORCING STEEL BRIDGE | LB | 770,100 |
| HEADED BAR REINFORCEMENT | EA | 1,248 |
| WELDED STEEL PIPE CASING (BRIDGE) | LF | 80 |
| ROCK SLOPE PROTECTION (¼" TON, METHOD B) | CY | 395 |
| CONCRETE BARRIER (TYPE 80) | LF | 1,338 |
| TUBULAR BICYCLE RAILING | LF | 1,338 |

## GENERAL NOTES
## LOAD AND RESISTANCE FACTOR DESIGN

DESIGN:
AASHTO LRFD BRIDGE DESIGN SPECIFICATIONS, 6TH EDITION AND THE CALTRANS AMENDMENTS, 6TH EDITION.

SEISMIC DESIGN:
CALTRANS SEISMIC DESIGN CRITERIA (SDC), VERSION 1.7 APRIL 2013.

DEAD LOAD:
INCLUDES 35 PSF FOR FUTURE WEARING SURFACE.

LIVE LOADING:
HL93 W/"LOW BOY" AND PERMIT DESIGN VEHICLE.

SEISMIC LOADING:
ACCELERATION RESPONSE CURVE PER ARS ONLINE V.2.2.06

SOIL PROFILE: $VS_{30}$ = 820 FT/SEC
MOMENT MAGNITUDE: $M_{max}$ = 6.7
PEAK GROUND ACCELERATION: 0.27 g

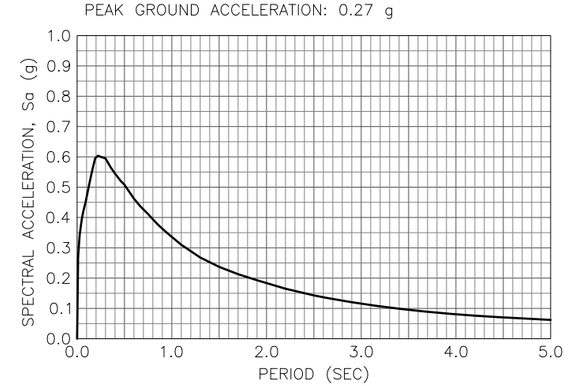


REINFORCED CONCRETE:
fy = 60 KSI
f'c = 3.6 KSI, UNLESS OTHERWISE NOTED.
n = 8

PRESTRESSED CONCRETE:
SEE "PRESTRESSING NOTES" ON "GIRDER LAYOUT" SHEET.

PILES:
SEE "PILE DATA TABLE" ON "FOUNDATION PLAN NO. 1" SHEET.

INDEX TO PLANS:


S-1 GENERAL PLAN
S-2 INDEX TO PLANS
S-3 DECK CONTOURS
S-4 FOUNDATION PLAN NO. 1
S-5 FOUNDATION PLAN NO. 2
S-6 DEMOLITION DETAILS
S-7 ABUTMENT 1 LAYOUT
S-8 ABUTMENT 6 LAYOUT
S-9 ABUTMENT DETAILS NO. 1
S-10 ABUTMENT DETAILS NO. 2
S-11 PIER DETAILS NO. 1
S-12 PIER DETAILS NO. 2
S-13 TYPICAL SECTION
S-14 GIRDER LAYOUT NO. 1
S-15 GIRDER LAYOUT NO. 2
S-16 GIRDER REINFORCEMENT
S-17 PTFE/ELASTOMERIC BEARING DETAILS
S-18 JOINT SEAL – ABUTMENT DETAILS MOVEMENT RATING GREATER THAN 4"
S-19 STRUCTURE APPROACH TYPE N(30S)
S-20 STRUCTURE APPROACH DRAINAGE DETAILS
S-21 TUBULAR BICYCLE RAILING DETAILS
S-22 ROCK SLOPE PROTECTION DETAILS
S-23 LOG OF TEST BORINGS 1 OF 6
S-24 LOG OF TEST BORINGS 2 OF 6
S-25 LOG OF TEST BORINGS 3 OF 6
S-26 LOG OF TEST BORINGS 4 OF 6
S-27 LOG OF TEST BORINGS 5 OF 6
S-28 AS BUILT LOG OF TEST BORINGS 6 OF 6


CALTRANS STANDARD PLANS DATED 2010

| | | |
|---|---|---|
| | A10A | ABBREVIATIONS (SHEET 1 OF 2) |
| RSP | A10B | ABBREVIATIONS (SHEET 2 OF 2) |
| | A10C | LINES AND SYMBOLS (SHEET 1 of 3) |
| | A10D | LINES AND SYMBOLS (SHEET 2 of 3) |
| | A10E | LINES AND SYMBOLS (SHEET 3 of 3) |
| | A62B | LIMITS OF PAYMENT FOR EXCAVATION AND BACKFILL BRIDGE SURCHARGE AND WALL |
| | A62C | LIMITS OF PAYMENT FOR EXCAVATION AND BACKFILL BRIDGE |
| | B0-1 | BRIDGE DETAILS |
| | B0-3 | BRIDGE DETAILS |
| | B0-5 | BRIDGE DETAILS |
| | B0-13 | BRIDGE DETAILS |
| | B3-6 | RETAINING WALL DETAILS NO. 2 |
| | B7-1 | BOX GIRDER DETAILS |
| RSP | B7-10 | UTILITY OPENING – BOX GIRDER |
| RSP | B8-5 | CAST-IN-PLACE PRESTRESSED GIRDER DETAILS |
| | B11-60 | CONCRETE BARRIER TYPE 80 (SHEET 1 OF 2) |
| | B11-61 | CONCRETE BARRIER TYPE 80 (SHEET 2 OF 2) |

STANDARD PLAN SHEET NO.
DETAIL NO.

FOR REFERENCE ONLY--NOT FOR BIDDING PURPOSES

HDR
HDR Engineering, Inc.
2365 Iron Point Road, Suite 300 Folsom, CA 95630

REGISTERED CIVIL ENGINEER

REGISTERED PROFESSIONAL ENGINEER
TITUS KENG
No. 45226
Exp. 9-30-14
CIVIL
STATE OF CALIFORNIA

BRIDGE NO. 08C-0377

| No. | REVISION: | BY: | DATE: |
|---|---|---|---|
| | | | |

These drawings are instruments of service provided by the Tehama County Public Works Dept. and are not to be used for any type of construction unless signed and sealed by a Professional Engineer in the employ of the County of Tehama

TEHAMA COUNTY PUBLIC WORKS
9380 San Benito Ave.
Gerber, Ca. 96035
(530) 385-1462

HORIZ: AS SHOWN
VERT:
SCALE
DRAWN BY: J. GREEN DATE: 11/01/2013
CHECKED BY: S. KOTAMALA DATE: 7/16/2013

99W AT THOMES CREEK BRIDGE
PROJECT (REPLACE)
INDEX TO PLANS

PROJECT NO.: 14-370861

SHEET NO. S-2
PAGE NO. 21/47

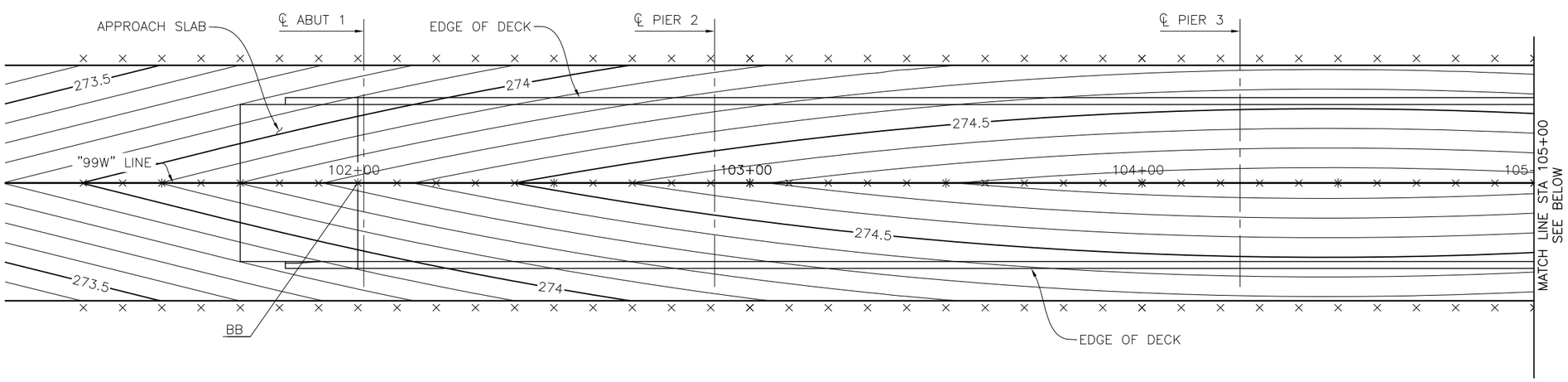


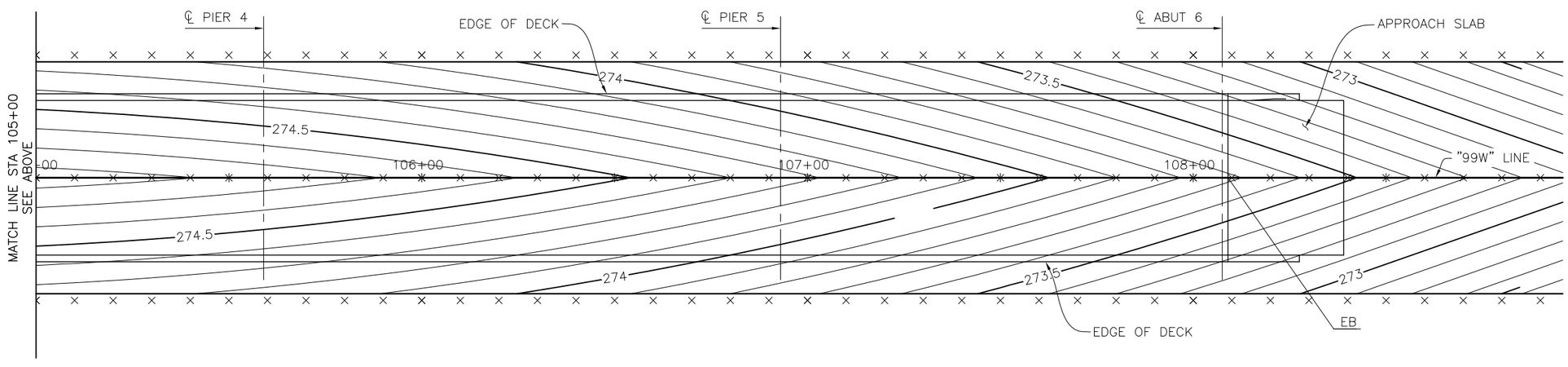


NOTES:

1. × – INDICATES 10' INTERVALS MEASURED ALONG "99W" LINE.
2. CONTOUR INTERVAL = 0.1'
3. CONTOURS DO NOT INCLUDE CAMBER OR ALLOWANCE FOR FALSEWORK SETTLEMENT.

**PLAN**
1/16" = 1'–0"

BRIDGE NO. 08C–0377

| No. | REVISION: | BY: | DATE: |
|---|---|---|---|
| | | | |

These drawings are instruments of service provided by the Tehama County Public Works Dept. and are not to be used for any type of construction unless signed and sealed by a Professional Engineer in the employ of the County of Tehama

TEHAMA COUNTY PUBLIC WORKS
9380 San Benito Ave.
Gerber, Ca. 96035
(530) 385–1462

FOR REFERENCE ONLY–NOT FOR BIDDING PURPOSES

HORIZ: AS SHOWN
VERT:
SCALE
DRAWN BY: J. GREEN
DATE: 11/01/2013
CHECKED BY: S. KOTAMALA
DATE: 7/16/2013

99W AT THOMES CREEK BRIDGE
PROJECT (REPLACE)
DECK CONTOURS

HDR
HDR Engineering, Inc.
2365 Iron Point Road, Suite 300 Folsom, CA 95630

REGISTERED CIVIL ENGINEER

REGISTERED PROFESSIONAL ENGINEER
TITUS KENG
No. 45226
Exp. 9–30–14
CIVIL
STATE OF CALIFORNIA

PROJECT NO.: 14–370861

| SHEET NO. | PAGE NO. |
|---|---|
| S-3 | 22/47 |

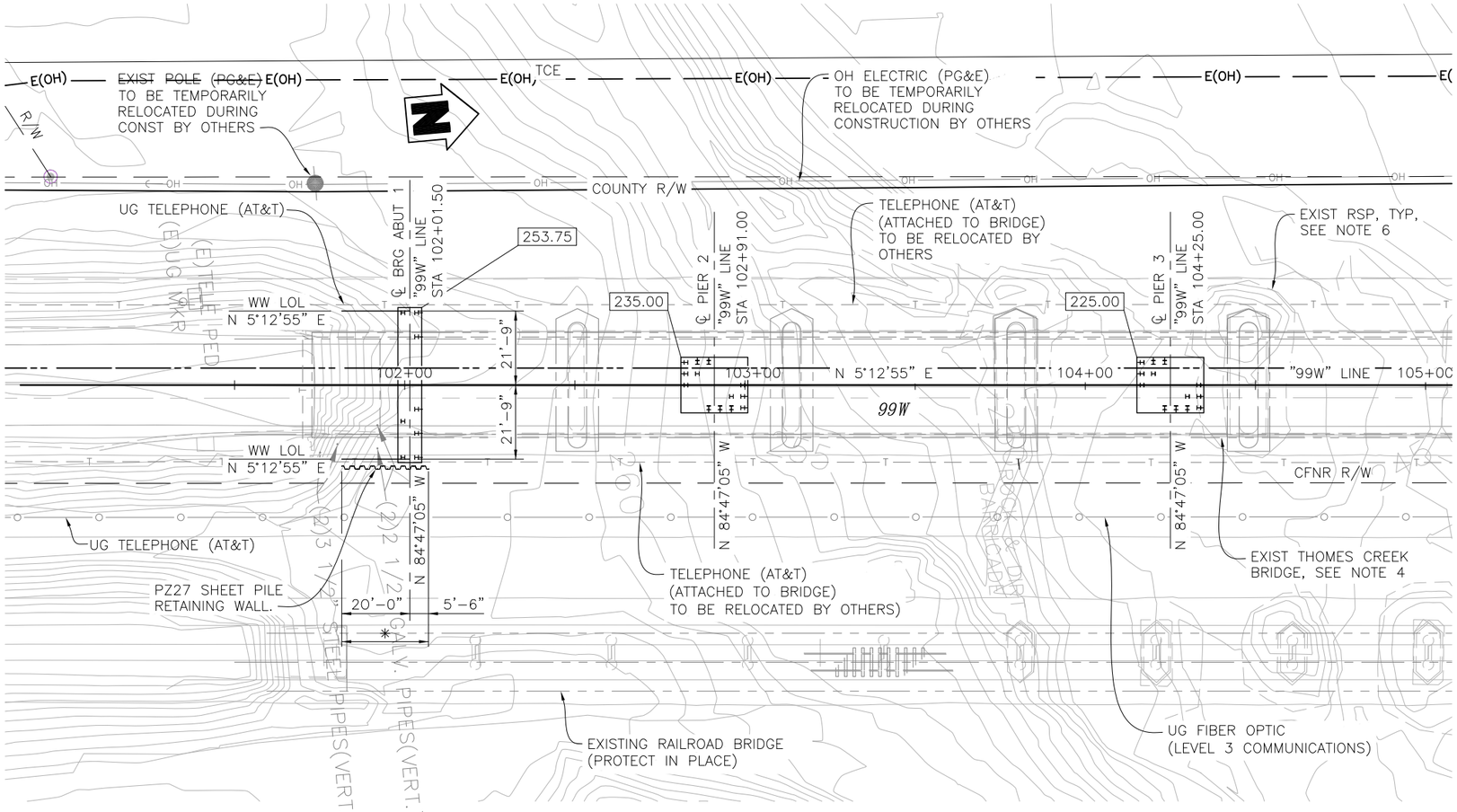


*LIMITS OF PAYMENT FOR PZ27 SHEET PILE RETAINING WALL.

## PLAN

1" = 20'

## PILE DATA TABLE

| LOCATION | PILE TYPE | NOMINAL RESISTANCE (KIPS) | | DESIGN TIP ELEVATION | SPECIFIED TIP ELEVATION | NOMINAL DRIVING RESISTANCE (KIPS) |
|---|---|---|---|---|---|---|
| | | COMPRESSION | TENSION | | | |
| ABUT 1 | HP14X89 | 350 | 0 | 191.0 (1)<br>224.0 (2) | 191.0 | 350 |
| PIER 2 | HP14X89 | 480 | 280 | 145.0 (1)<br>188.0 (2)<br>157.0 (3) | 145.0 | 550 |
| PIER 3 | HP14X89 | 530 | 280 | 137.0 (1)<br>178.0 (2)<br>148.0 (3) | 137.0 | 600 |
| PIER 4 | HP14X89 | 530 | 280 | 134.0 (1)<br>175.0 (2)<br>146.0 (3) | 134.0 | 600 |
| PIER 5 | HP14X89 | 530 | 280 | 136.0 (1)<br>179.0 (2)<br>148.0 (3) | 136.0 | 600 |
| ABUT 6 | HP14X89 | 370 | 0 | 187.0 (1)<br>217.0 (2) | 187.0 | 370 |

1. DESIGN TIP ELEVATIONS AT ABUTMENTS ARE CONTROLLED BY (1) COMPRESSION, (2) LATERAL
   DESIGN TIP ELEVATIONS AT PIERS ARE CONTROLLED BY (1) COMPRESSION (SCOUR CASE), (2) LATERAL (SCOUR CASE), (3) TENSION (SCOUR CASE).
2. DO NOT RAISE SPECIFIED TIP ELEVATION WITHOUT ENGINEER'S REVIEW AND APPROVAL.

## HYDROLOGIC SUMMARY TABLE

DRAINAGE AREA 291.1 SQ MILES

| | DESIGN FLOOD | BASE FLOOD | OVER FLOOD TOPPING |
|---|---|---|---|
| FREQUENCE | 50 YR | 100 YR | N/A |
| DISCHARGE | 38,800 CFS | 44,400 CFS | |
| WATER SURFACE ELEV AT BRIDGE | 262.08 FT | 263.42 FT | |

FLOODPLAIN DATA ARE BASED UPON INFORMATION AVAILABLE WHEN THE PLANS WERE PREPARED AND ARE SHOWN TO MEET FEDERAL REQUIREMENTS. THE ACCURACY OF SAID INFORMATION IS NOT WARRANTED BY THE TEHAMA COUNTY, OR HDR ENGINEERING INC. INTERESTED OR AFFECTED PARTIES SHOULD MAKE THEIR OWN INVESTIGATION.

## SURVEY CONTROL

| POINT # | RAW DESCRIPTION | ELEVATION | NORTHING | EASTING |
|---|---|---|---|---|
| 50111 | 60d SPIKE | 272.99 | 1874971.78 | 6512089.17 |
| 50171 | 5/8 REBAR | 269.80 | 1876537.96 | 6512177.89 |

NOTES:

1. CONTOURS SHOWN ARE EXISTING GROUND.
2. SEE "ROAD PLANS" FOR TYPE AND LOCATIONS OF ALL EXISTING AND PROPOSED UTILITIES.
3. LOCATION OF EXISTING UTILITIES SHOWN ARE APPROXIMATE. THE CONTRACTOR SHALL VERIFY LOCATIONS OF ALL AFFECTED UTILITIES PRIOR TO PERFORMING ANY EXCAVATION.
4. EXISTING THOMES CREEK BRIDGE (BRIDGE NO. 8C-110) TO BE REMOVED, SEE "DEMOLITION DETAILS" SHEET FOR ADDITIONAL INFORMATION.
5. TOPOGRAPHIC SURVEY AND INFORMATION PROVIDED BY COUNTY.
6. ALL EXISTING RSP AROUND PIERS AND ABUTMENTS SHALL BE REMOVED, STORED AND REUSED AT NEW ABUTMENTS. SEE RSP DETAILS ON "ABUTMENT DETAILS NO. 2" SHEET.
7. NOT ALL PILES SHOWN HERE.

LEGEND:

- INDICATES BOTTOM OF FOOTING ELEVATION.
- INDICATES NEW STRUCTURE.
- INDICATES EXISTING FEATURES.
- INDICATES BATTERED HP PILE.
- INDICATES VERTICAL HP PILE.

FOR REFERENCE ONLY--NOT FOR BIDDING PURPOSES

HDR

HDR Engineering, Inc.
2365 Iron Point Road, Suite 300 Folsom, CA 95630

REGISTERED CIVIL ENGINEER

REGISTERED PROFESSIONAL ENGINEER TITUS KENG No. 45226 Exp. 9-30-14 CIVIL STATE OF CALIFORNIA

BRIDGE NO. 08C-0377

| No. | REVISION: | BY: | DATE: |
|---|---|---|---|
| | | | |

These drawings are instruments of service provided by the Tehama County Public Works Dept. and are not to be used for any type of construction unless signed and sealed by a Professional Engineer in the employ of the County of Tehama

TEHAMA COUNTY PUBLIC WORKS
9380 San Benito Ave.
Gerber, Ca. 96035
(530) 385-1462

COUNTY OF TEHAMA

HORIZ: AS SHOWN
VERT: AS SHOWN
SCALE
DRAWN BY: J. VOUGHT
DATE: 11/01/2013
CHECKED BY: S. KOTAMALA
DATE: 7/16/2013

99W AT THOMES CREEK BRIDGE
PROJECT (REPLACE)
FOUNDATION PLAN NO. 1

PROJECT NO.: 14-370861

SHEET NO. S-4
PAGE NO. 23/47

BRIDGE NO.
08C-0377

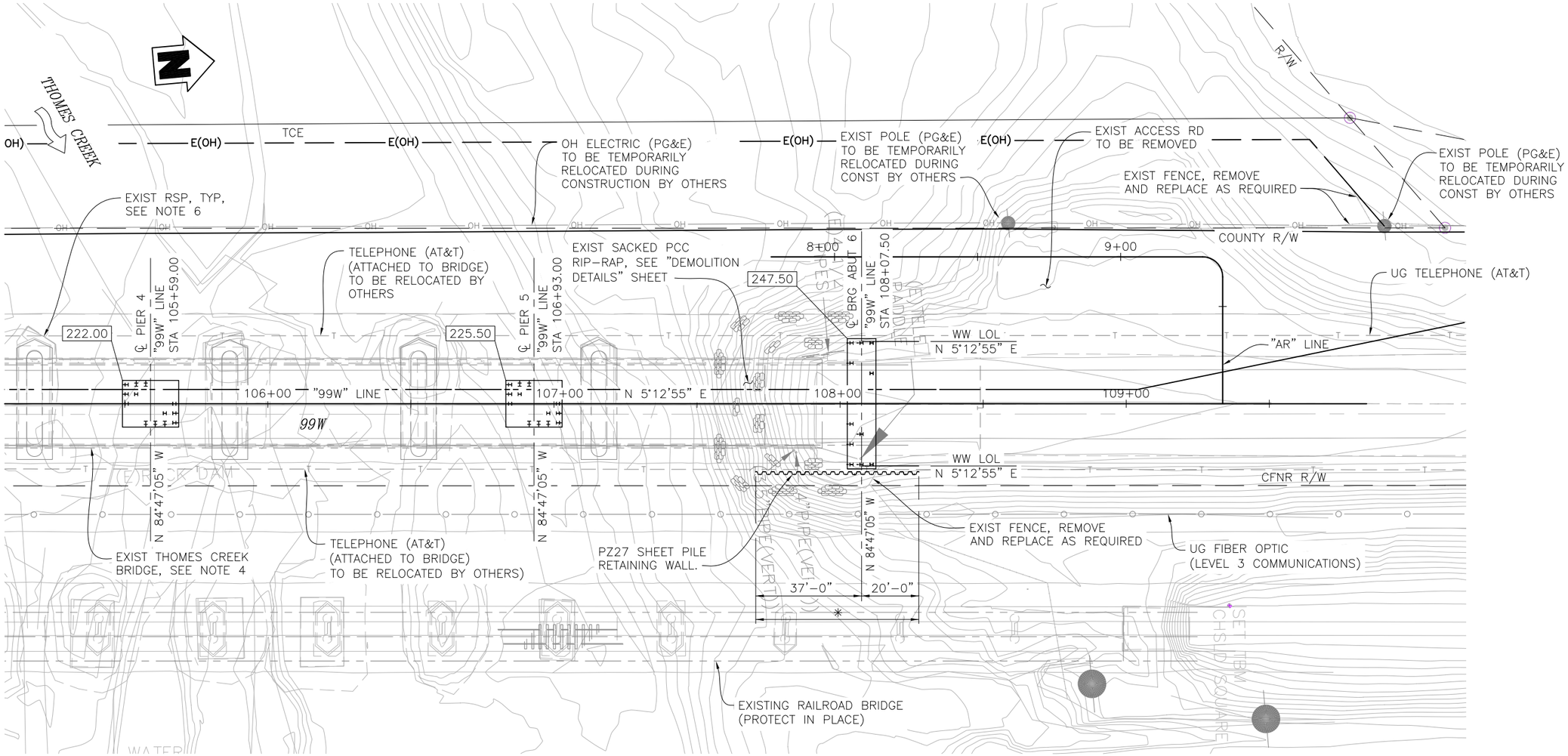


*LIMITS OF PAYMENT FOR PZ27 SHEET PILE RETAINING WALL.

## PLAN
1" = 20'

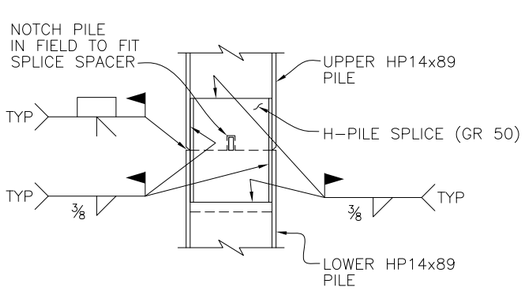


## PILE SPLICE DETAIL
1" = 1'-0"

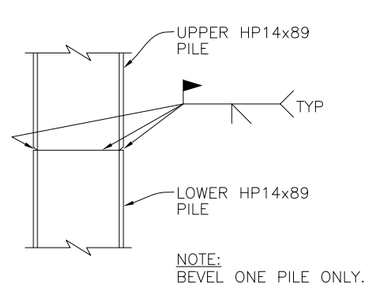


## ALTERNATE PILE SPLICE DETAIL
1" = 1'-0"

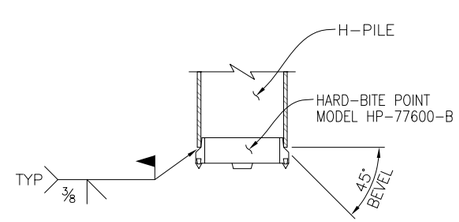


## PILE TIP DETAIL
1" = 1'-0"

NOTES:

1. FOR NOTES AND LEGEND, SEE "FOUNDATION PLAN NO. 1" SHEET.
2. FOR HYDROLOGIC SUMMARY TABLE, SEE "FOUNDATION PLAN NO. 1" SHEET.
3. FOR PILE DATA TABLE, SEE "FOUNDATION PLAN NO. 1" SHEET.

FOR REFERENCE ONLY-NOT FOR BIDDING PURPOSES


HDR
HDR Engineering, Inc.
2365 Iron Point Road, Suite 300 Folsom, CA 95630

REGISTERED CIVIL ENGINEER

REGISTERED PROFESSIONAL ENGINEER
TITUS KENG
No. 45226
Exp. 9-30-14
CIVIL
STATE OF CALIFORNIA


| No. | REVISION: | BY: | DATE: |
|---|---|---|---|
| | | | |

These drawings are instruments of service provided by the Tehama County Public Works Dept. and are not to be used for any use of construction unless signed and sealed by a Professional Engineer in the employ of the County of Tehama


TEHAMA COUNTY PUBLIC WORKS
9380 San Benito Ave.
Gerber, Ca 96035
(530) 385-1462


SCALE: HORIZ: AS SHOWN; VERT: AS SHOWN
DRAWN BY: J. VOUGHT DATE: 11/01/2013
CHECKED BY: S. KOTAMALA DATE: 7/16/2013

# 99W AT THOMES CREEK BRIDGE PROJECT (REPLACE) FOUNDATION PLAN NO. 2

PROJECT NO.: 14-370861

SHEET NO. S-5 | PAGE NO. 24/47

BRIDGE NO.
08C-0377

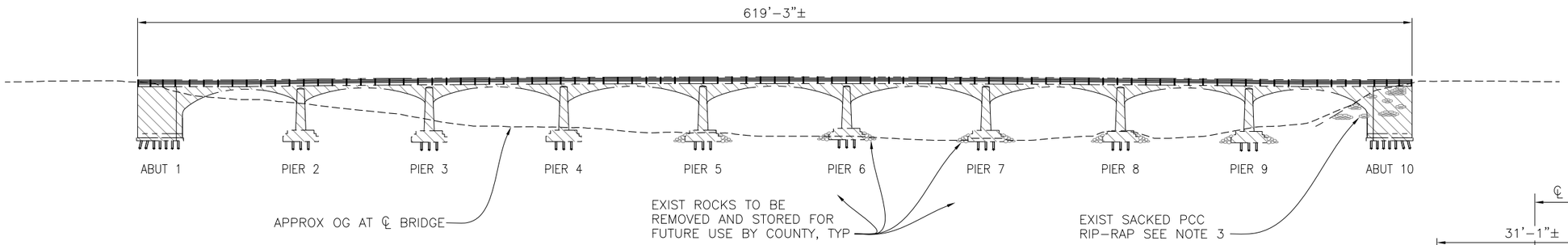


## ELEVATION
NO SCALE

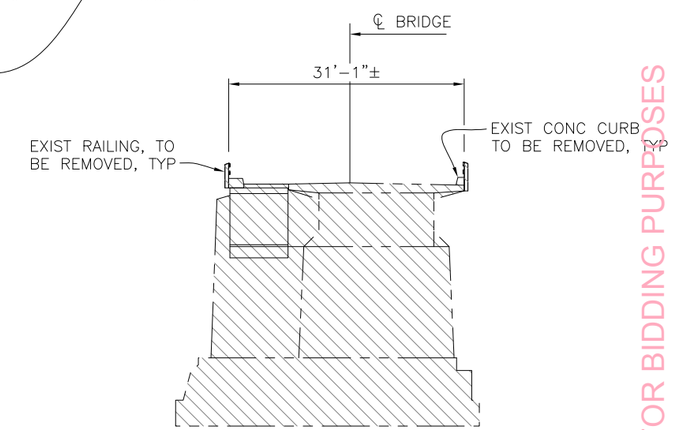


## TYPICAL SECTION
NO SCALE

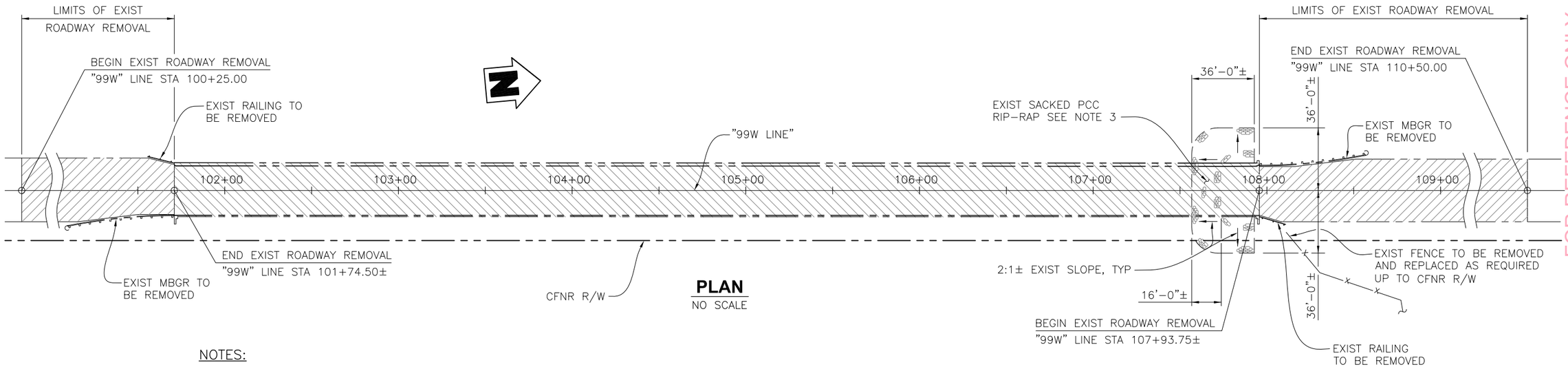


## PLAN
NO SCALE

NOTES:

1. EXISTING THOMES CREEK BRIDGE TO BE COMPLETELY REMOVED.
2. REMOVE PILES 3'-0" BELOW OG. PILES THAT INTERFERE WITH NEW CONSTRUCTION WILL BE REMOVED 3'-0" MIN BELOW FG UNLESS OTHERWISE NOTED. EXISTING PILES THAT INTERFERE WITH THE NEW BRIDGE SHALL BE REMOVED TO BOTTOM OF NEW FOOTINGS.
3. EXISTING SACKED PCC RIP-RAP TO BE REMOVED AND DISPOSED.

LEGEND:

INDICATES EXISTING BRIDGE REMOVAL.
INDICATES EXISTING ROADWAY REMOVAL.
INDICATES EXISTING STRUCTURE.

HDR
HDR Engineering, Inc.
2365 Iron Point Road, Suite 300 Folsom, CA 95630

REGISTERED CIVIL ENGINEER

REGISTERED PROFESSIONAL ENGINEER
TITUS KENG
No. 45226
Exp. 9-30-14
CIVIL
STATE OF CALIFORNIA

FOR REFERENCE ONLY--NOT FOR BIDDING PURPOSES

| No. | REVISION: | BY: | DATE: |
|---|---|---|---|
| | | | |

These drawings are instruments of service provided by the Tehama County Public Works Dept. and are not to be used for any type of construction unless signed and sealed by a Professional Engineer in the employ of the County of Tehama

TEHAMA COUNTY PUBLIC WORKS
9380 San Benito Ave.
Gerber, Ca. 96035
(530) 385-1462

COUNTY OF TEHAMA

| SCALE | |
|---|---|
| HORIZ: AS SHOWN | |
| VERT: AS SHOWN | |
| DRAWN BY: J. GREEN | DATE: 11/01/2013 |
| CHECKED BY: S. KOTAMALA | DATE: 7/16/2013 |

99W AT THOMES CREEK BRIDGE
PROJECT (REPLACE)
DEMOLITION DETAILS

PROJECT NO.: 14-370861

| SHEET NO. | PAGE NO. |
|---|---|
| S-6 | 25 / 47 |

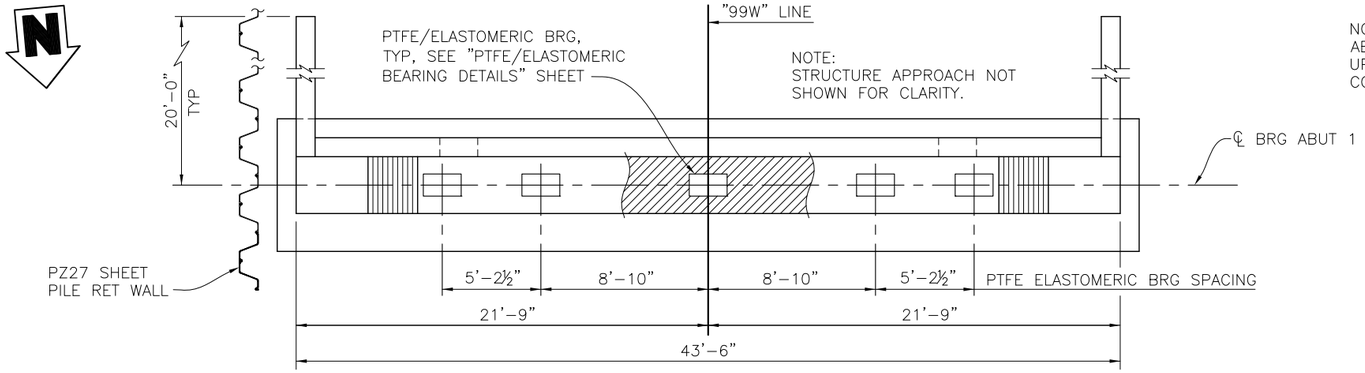


## PLAN
1/4" = 1'-0"

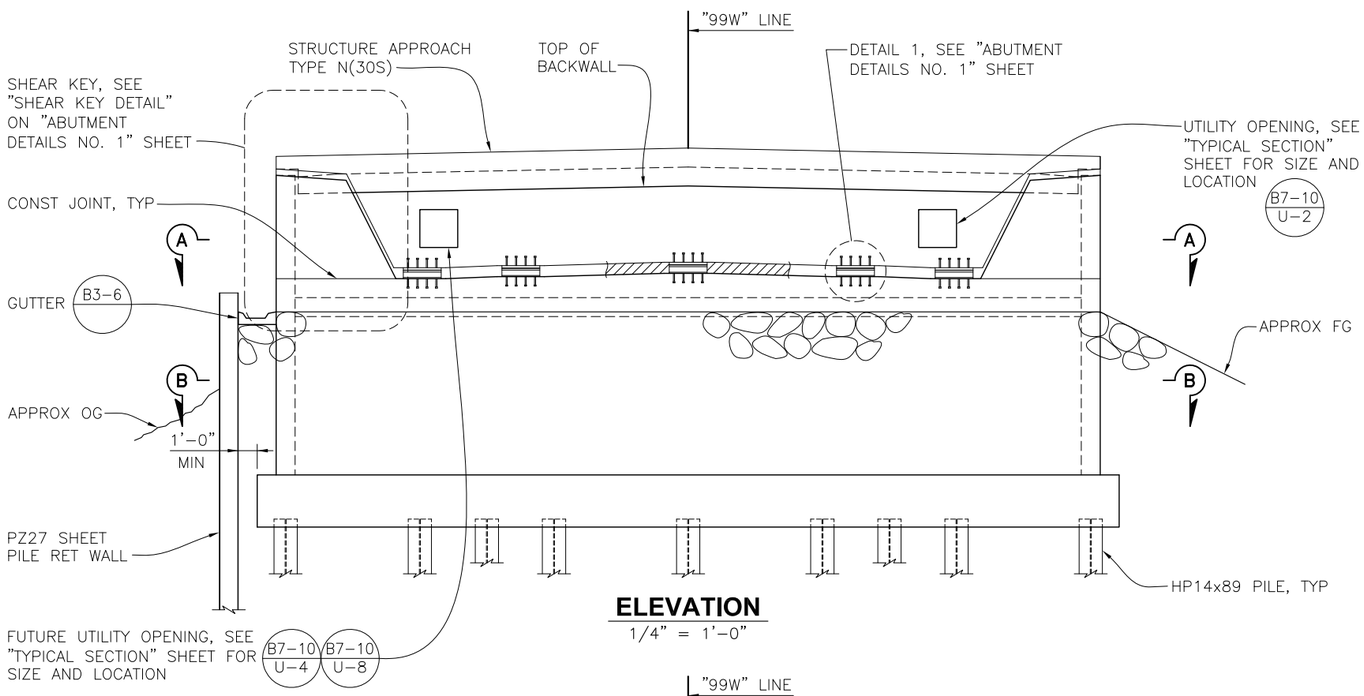


## ELEVATION
1/4" = 1'-0"

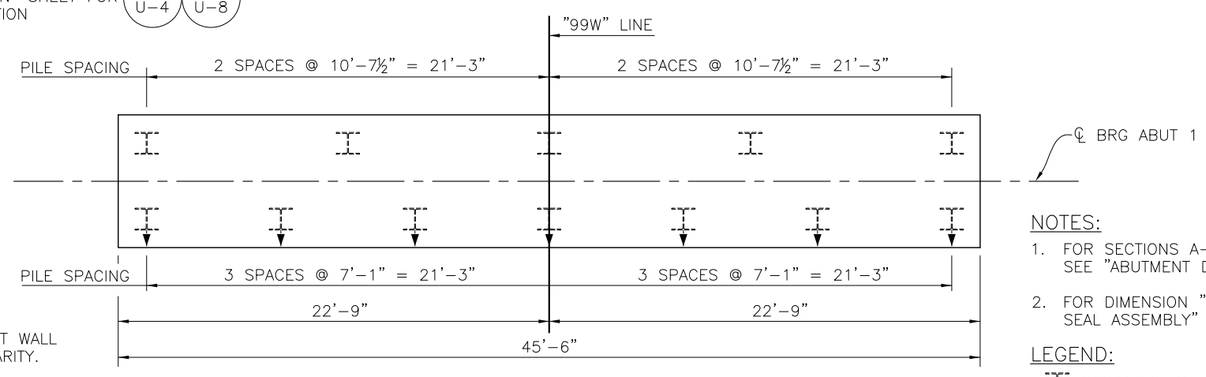


NOTE:
PZ27 SHEET PILE RET WALL NOT SHOWN FOR CLARITY.

## FOOTING PLAN
1/4" = 1'-0"

NOTES:

1. FOR SECTIONS A-A, B-B, DETAIL 1 & 2, SEE "ABUTMENT DETAILS NO. 1" SHEET.
2. FOR DIMENSION "a", SEE "STRIP JOINT SEAL ASSEMBLY" SHEET.

LEGEND:

INDICATES BATTERED HP PILE.

INDICATES VERTICAL HP PILE.

NOTE:
ABUT BACKFILL TO BE PLACED UP TO SEAT ELEVATION BEFORE CONSTRUCTING SUPERSTRUCTURE.

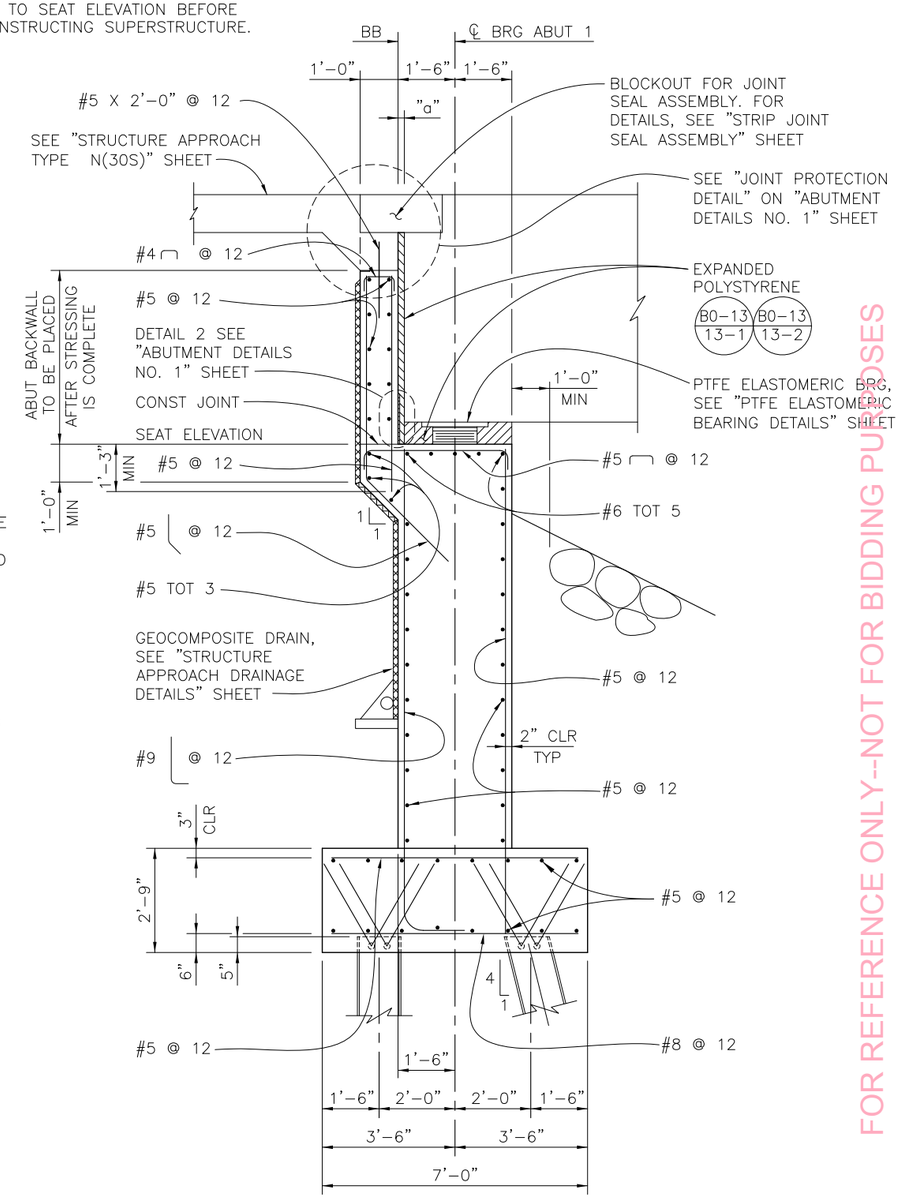


## TYPICAL SECTION
1/2" = 1'-0"

FOR REFERENCE ONLY-NOT FOR BIDDING PURPOSES

HDR

HDR Engineering, Inc.
2365 Iron Point Road, Suite 300 Folsom, CA 95630

REGISTERED CIVIL ENGINEER

REGISTERED PROFESSIONAL ENGINEER
TITUS KENG
No. 45226
Exp. 9-30-14
CIVIL
STATE OF CALIFORNIA

BRIDGE NO.
08C-0377

| No. | REVISION: | BY: | DATE: |
|---|---|---|---|
| | | | |

These drawings are instruments of service provided by the Tehama County Public Works Dept. and are not to be used for any type of construction unless signed and sealed by a Registered Engineer in the employ of the County of Tehama

TEHAMA COUNTY PUBLIC WORKS
9380 San Benito Ave.
Gerber, Ca. 96035
(530) 385-1462

COUNTY OF TEHAMA

| SCALE | |
|---|---|
| HORIZ: AS SHOWN | |
| VERT: | |
| DRAWN BY: J. VOUGHT | DATE: 11/01/2013 |
| CHECKED BY: S. KOTAMALA | DATE: 7/16/2013 |

99W AT THOMES CREEK BRIDGE
PROJECT (REPLACE)
ABUTMENT 1 LAYOUT

PROJECT NO.: 14-370861

SHEET NO. S-7

PAGE NO. 26/47

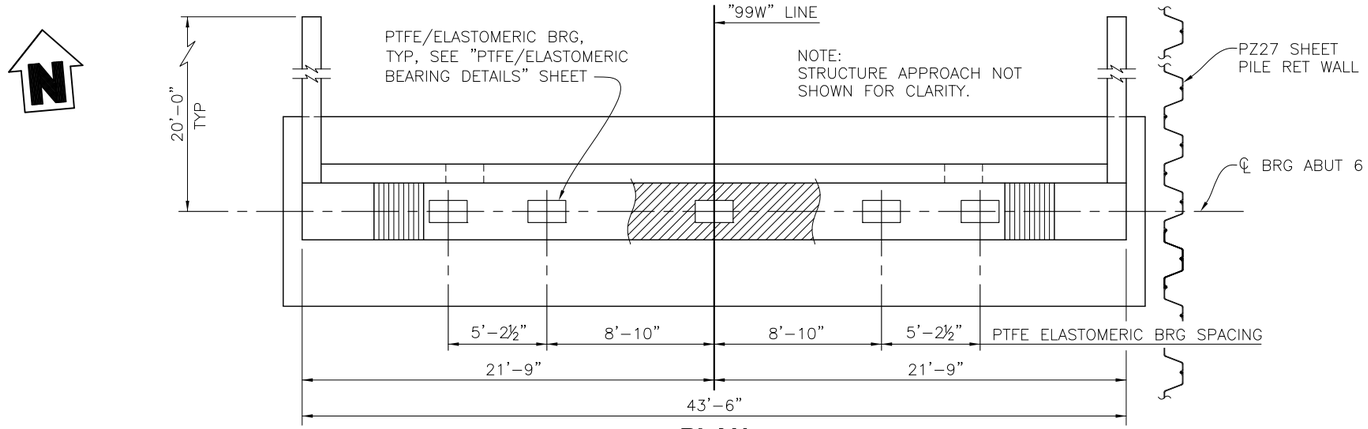


## PLAN
1/4" = 1'-0"

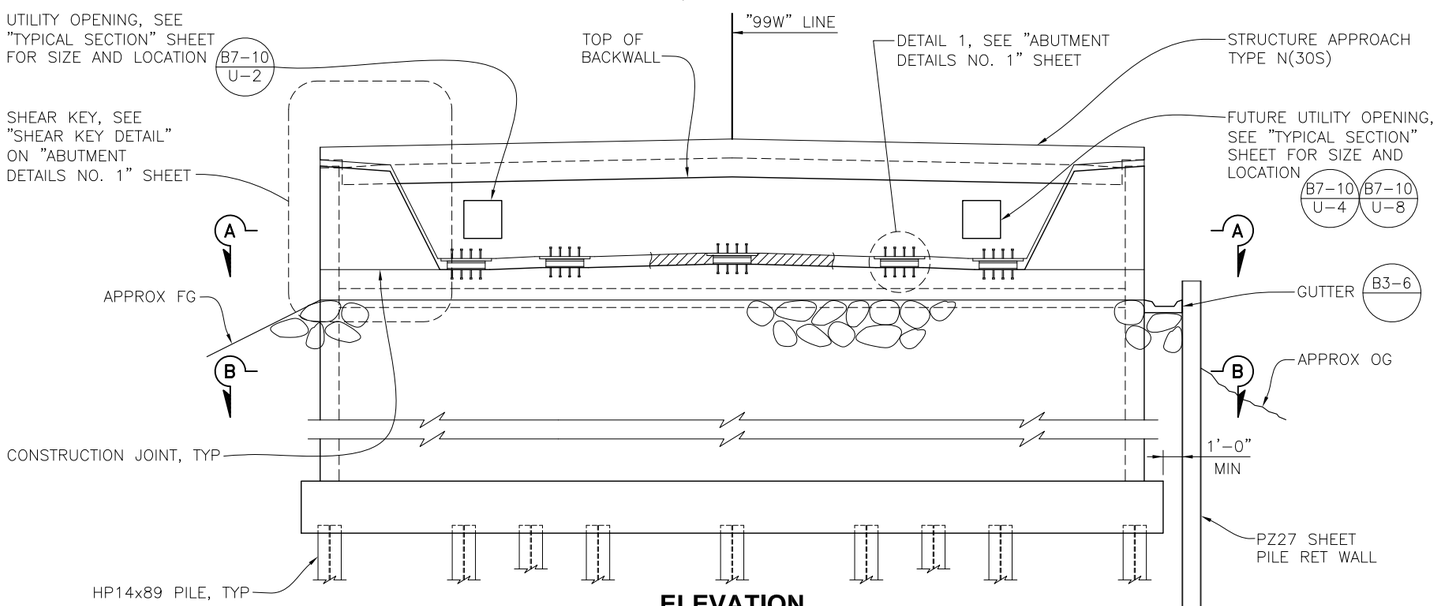


## ELEVATION
1/4" = 1'-0"

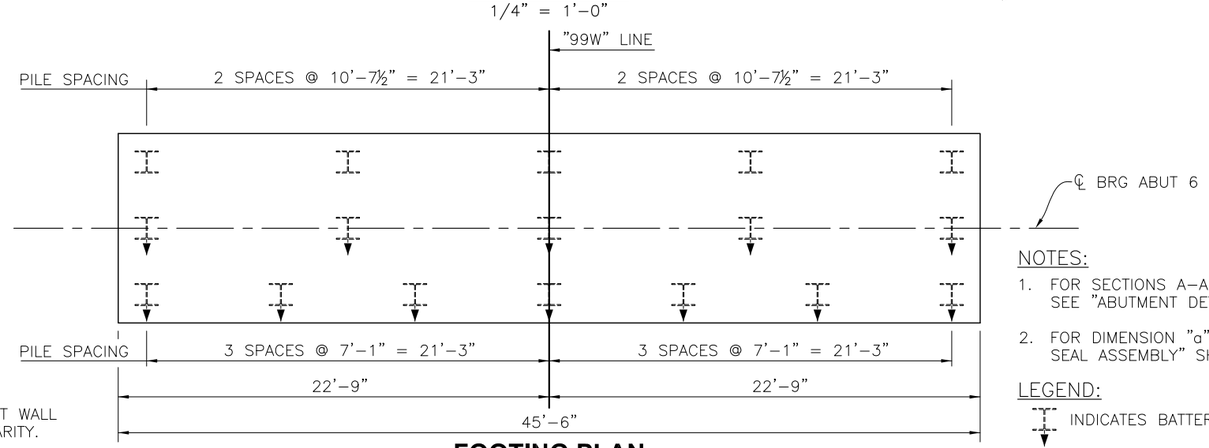


NOTE:
PZ27 SHEET PILE RET WALL NOT SHOWN FOR CLARITY.

## FOOTING PLAN
1/4" = 1'-0"

NOTES:

1. FOR SECTIONS A-A, B-B, DETAIL 1 & 2, SEE "ABUTMENT DETAILS NO. 1" SHEET.
2. FOR DIMENSION "a", SEE "STRIP JOINT SEAL ASSEMBLY" SHEET.

LEGEND:

INDICATES BATTERED HP PILE.

INDICATES VERTICAL HP PILE.

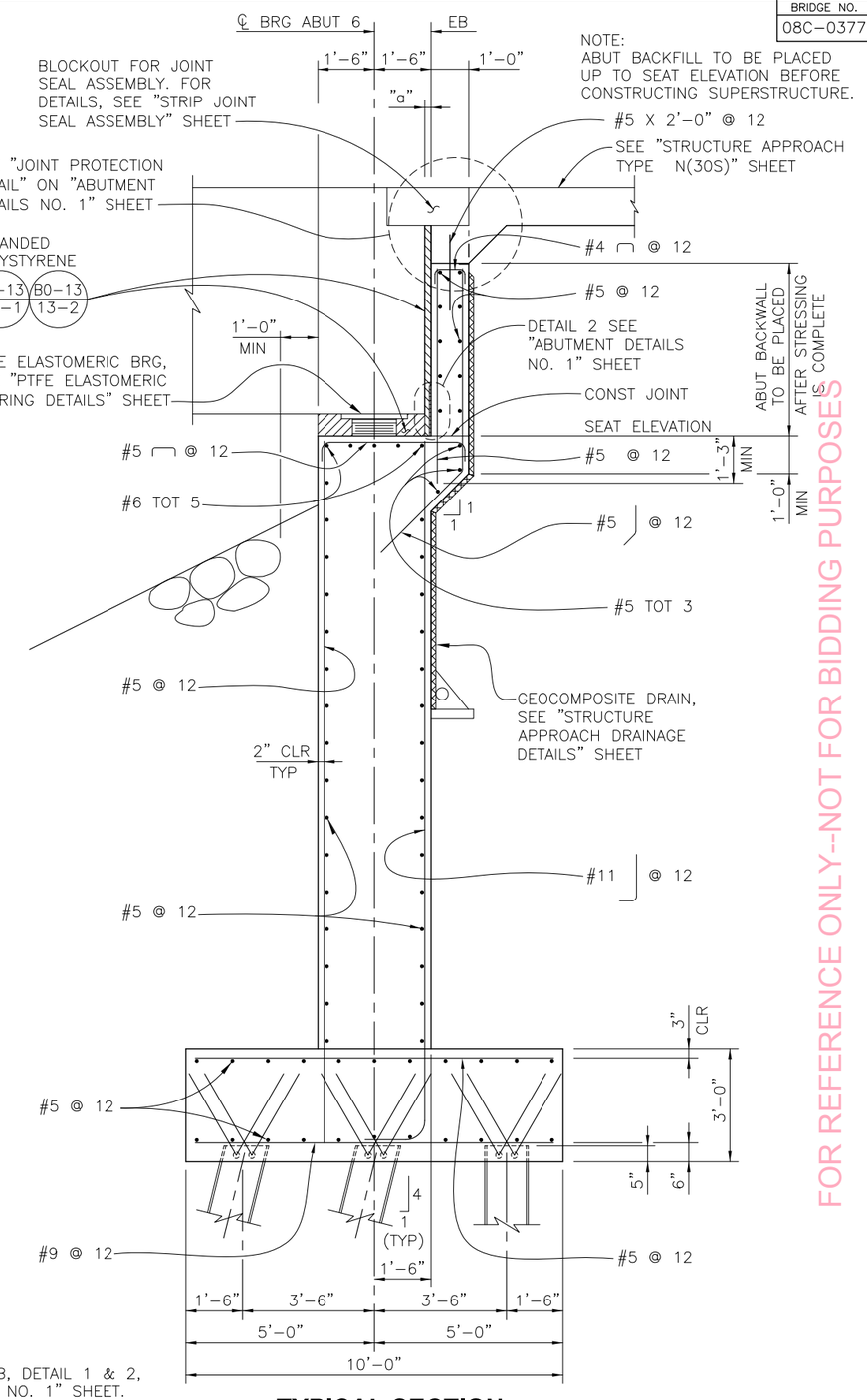


## TYPICAL SECTION
1/2" = 1'-0"

HDR

HDR Engineering, Inc.
2365 Iron Point Road, Suite 300 Folsom, CA 95630

REGISTERED CIVIL ENGINEER

REGISTERED PROFESSIONAL ENGINEER
TITUS KENG
No. 45226
Exp. 9-30-14
CIVIL
STATE OF CALIFORNIA

BRIDGE NO. 08C-0377

| No. | REVISION: | BY: | DATE: |
|---|---|---|---|
| | | | |

These drawings are instruments of service provided by the Tehama County Public Works Dept. and are not to be used for any type of construction unless signed and sealed by a Professional Engineer in the employ of the County of Tehama

FOR REFERENCE ONLY-NOT FOR BIDDING PURPOSES

TEHAMA COUNTY PUBLIC WORKS
9380 San Benito Ave.
Gerber, Ca 96035
(530) 385-1462

HORIZ: AS SHOWN
VERT:
SCALE
DRAWN BY: J. VOUGHT DATE: 11/01/2013
CHECKED BY: S. KOTAMALA DATE: 7/16/2013

# 99W AT THOMES CREEK BRIDGE
## PROJECT (REPLACE)
## ABUTMENT 6 LAYOUT

PROJECT NO.: 14-370861

SHEET NO. S-8

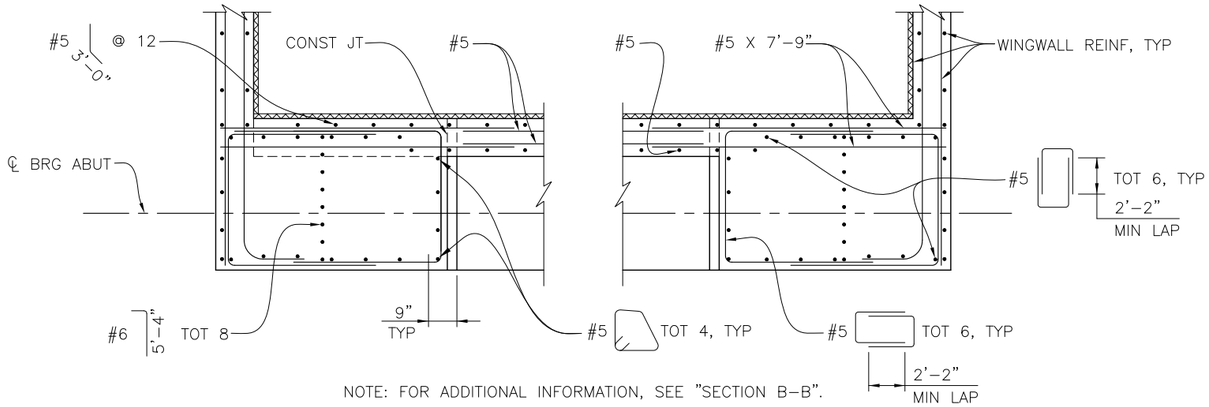


NOTE: FOR ADDITIONAL INFORMATION, SEE "SECTION B-B".

## SECTION A-A

1/2" = 1'-0"

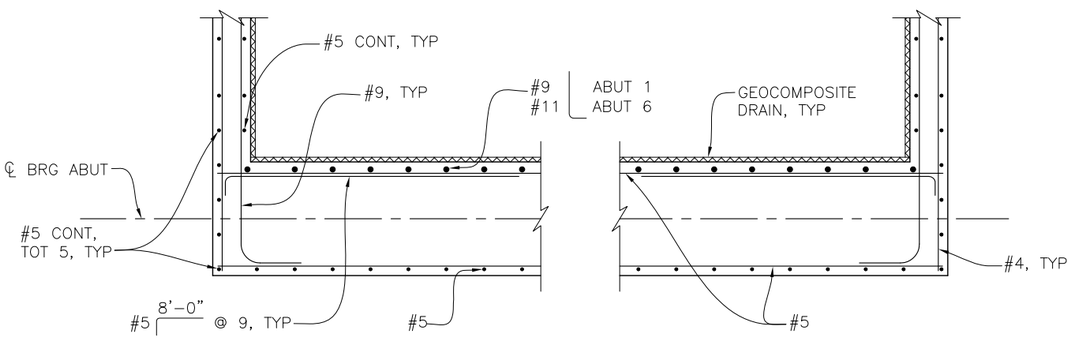


## SECTION B-B

1/2" = 1'-0"

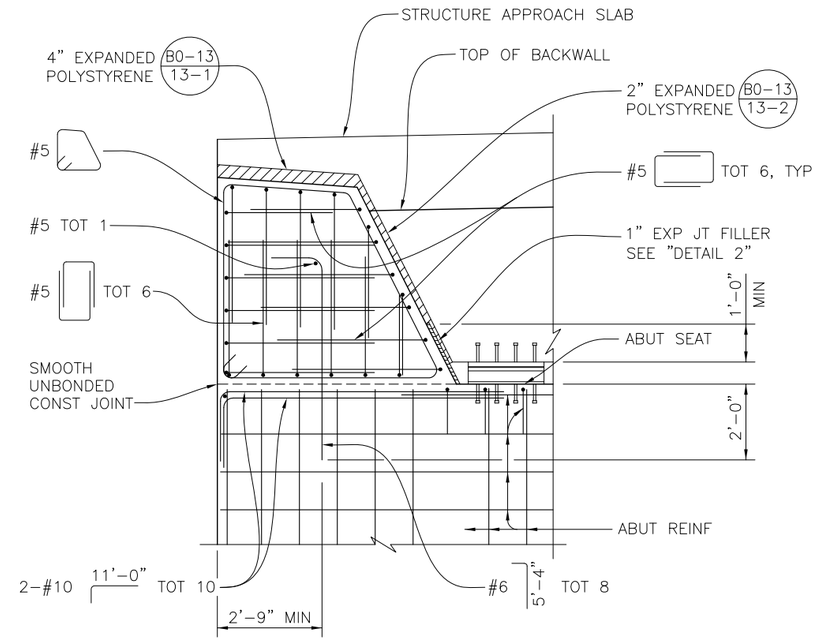


## SHEAR KEY DETAIL

1/2" = 1'-0"

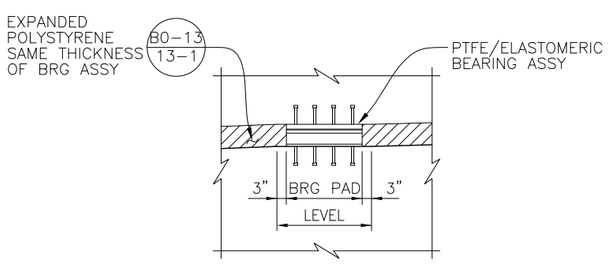


## DETAIL 1

1/2" = 1'-0"

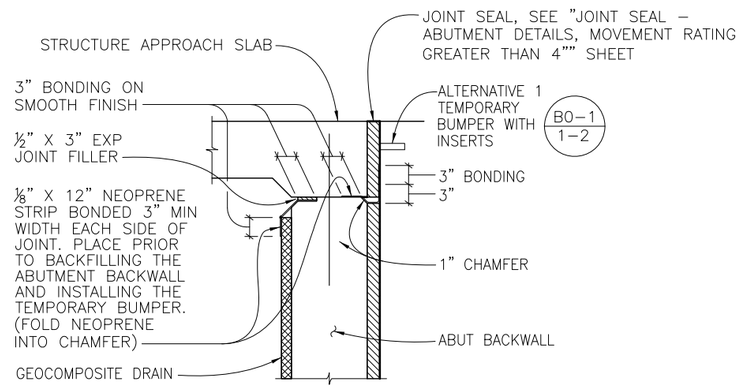


## JOINT PROTECTION DETAIL

1" = 1'-0"

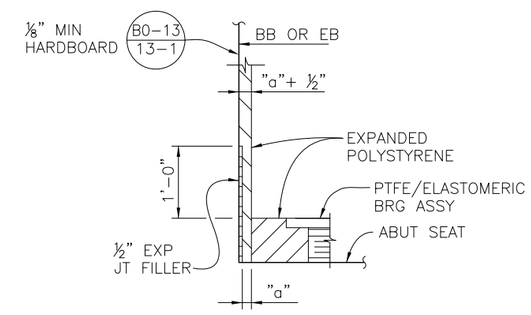


NOTES:
1. DETAIL AT BACKWALL SHOWN, DETAIL AT SHEAR KEY SIMILAR.
2. SEE "JOINT SEAL – ABUTMENT DETAILS, MOVEMENT RATING GREATER THAN 4"" SHEET.

## DETAIL 2

NO SCALE

BRIDGE NO. 08C-0377

| No. | REVISION: | BY: | DATE: |
|---|---|---|---|

These drawings are instruments of service provided by the Tehama County Public Works Dept. and are not to be used for any type of construction unless signed and sealed by a Registered Engineer in the employ of the County of Tehama

TEHAMA COUNTY PUBLIC WORKS
9380 San Benito Ave.
Gerber, Ca. 96035
(530) 385-1462

FOR REFERENCE ONLY-NOT FOR BIDDING PURPOSES

| SCALE | |
|---|---|
| HORIZ: AS SHOWN | |
| VERT: | |
| DRAWN BY: J. VOUGHT | DATE: 11/01/2013 |
| CHECKED BY: S. KOTAMALA | DATE: 7/16/2013 |

99W AT THOMES CREEK BRIDGE
PROJECT (REPLACE)
ABUTMENT DETAILS NO. 1

HDR
HDR Engineering, Inc.
2365 Iron Point Road, Suite 300 Folsom, CA 95630

REGISTERED CIVIL ENGINEER

REGISTERED PROFESSIONAL ENGINEER
TITUS KENG
No. 45226
Exp. 9-30-14
CIVIL
STATE OF CALIFORNIA

PROJECT NO.: 14-370861

| SHEET NO. | PAGE NO. |
|---|---|
| S-9 | 28/47 |

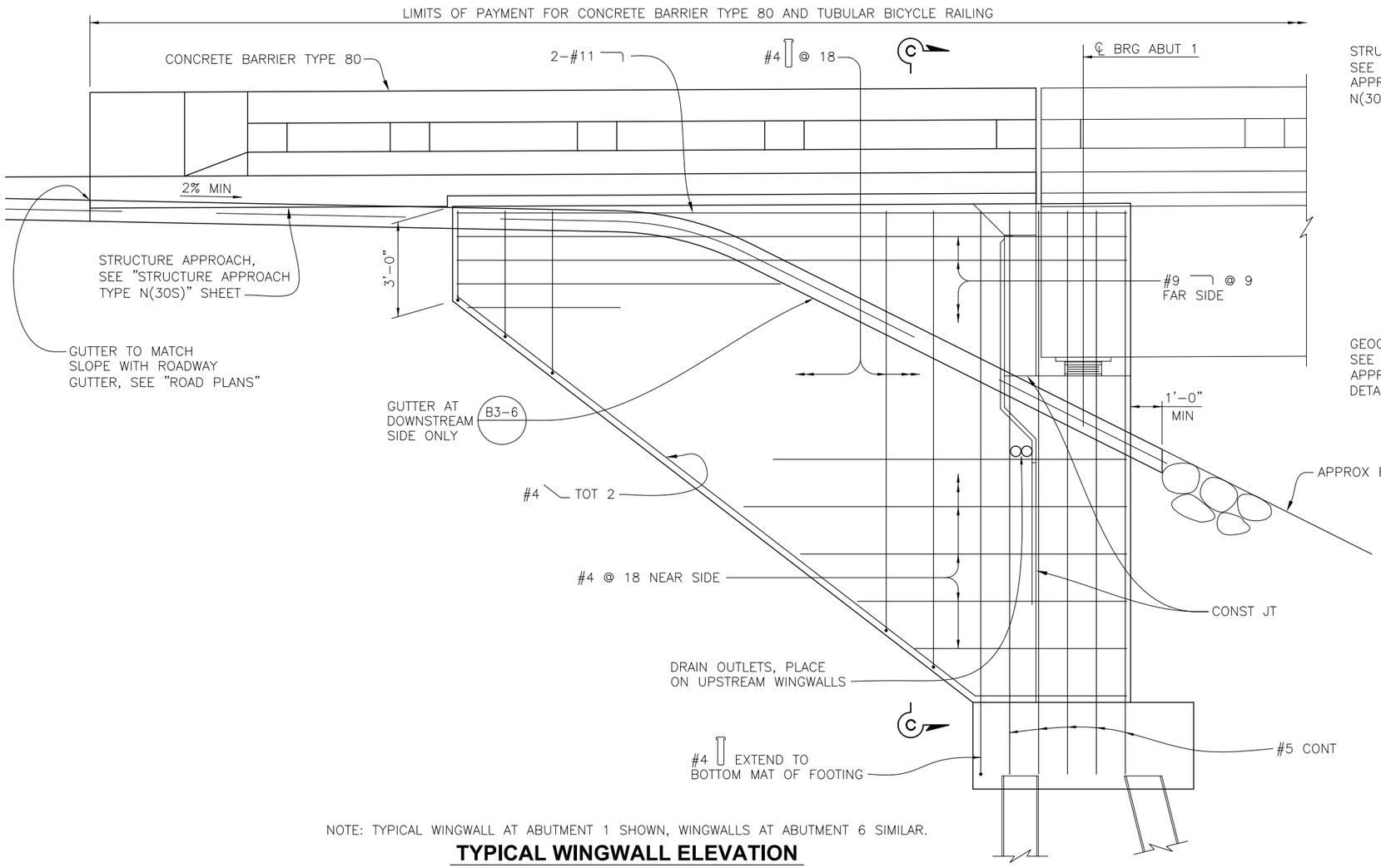


NOTE: TYPICAL WINGWALL AT ABUTMENT 1 SHOWN, WINGWALLS AT ABUTMENT 6 SIMILAR.

## TYPICAL WINGWALL ELEVATION

1/2" = 1'-0"

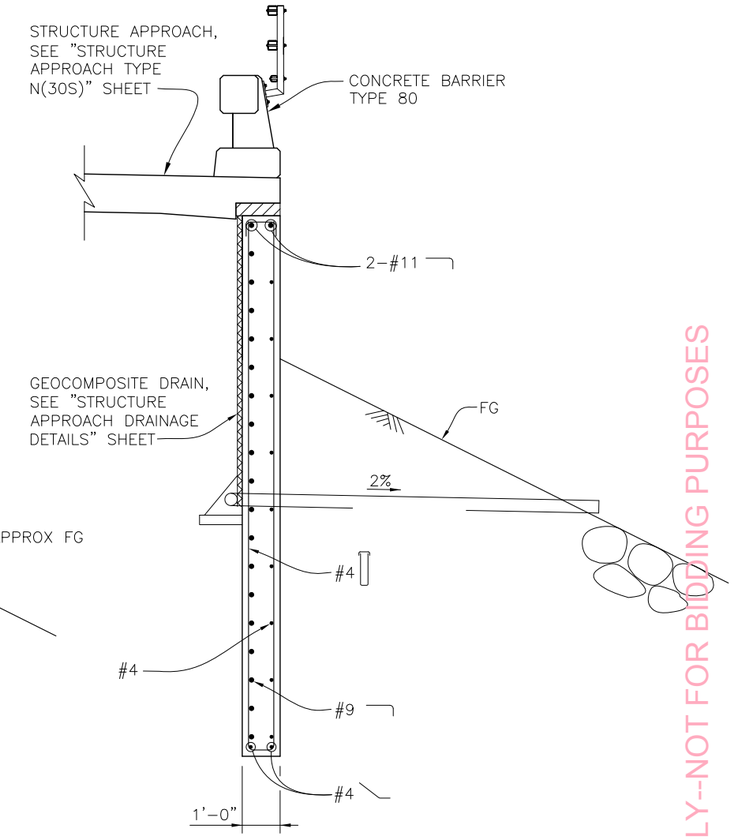


## SECTION C-C

1/2" = 1'-0"

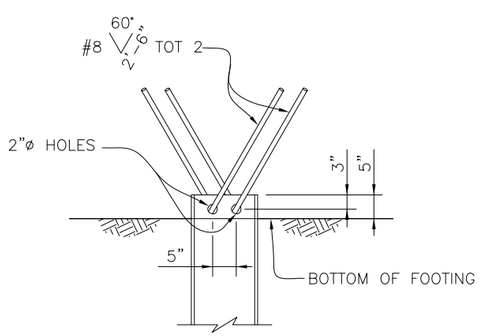


## STEEL PILE ANCHOR DETAIL

3/4" = 1'-0"

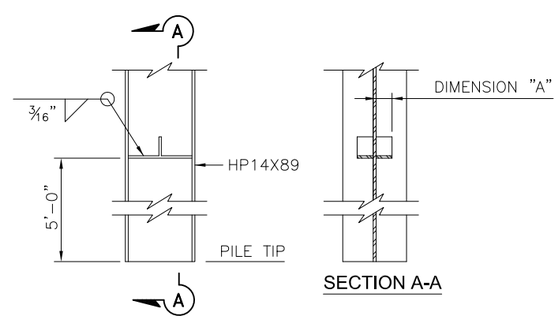


SECTION A-A

NOTE:
LUGS TO BE FURNISHED IF ORDERED BY THE ENGINEER AND PAID FOR AS EXTRA WORK.
DIMENSION "A" OF LUG TO BE DETERMINED BY THE ENGINEER.

## PILE LUG DETAIL

3/4" = 1'-0"

FOR REFERENCE ONLY-NOT FOR BIDDING PURPOSES

BRIDGE NO. 08C-0377

| No. | REVISION: | BY: | DATE: |
|---|---|---|---|

These drawings are instruments of service provided by the Tehama County Public Works Dept. and are not to be used for any type of construction unless signed and sealed by a Professional Engineer in the employ of the County of Tehama

TEHAMA COUNTY PUBLIC WORKS
9380 San Benito Ave.
Gerber, Ca. 96035
(530) 385-1462

| | |
|---|---|
| HORIZ: AS SHOWN | |
| VERT: | |
| DRAWN BY: J. VOUGHT | DATE: 11/01/2013 |
| CHECKED BY: S. KOTAMALA | DATE: 7/16/2013 |

99W AT THOMES CREEK BRIDGE
PROJECT (REPLACE)
ABUTMENT DETAILS NO. 2

PROJECT NO.: 14-370861

SHEET NO. S-10 PAGE NO. 29/47

HDR Engineering, Inc.
2365 Iron Point Road, Suite 300 Folsom, CA 95630

REGISTERED CIVIL ENGINEER

REGISTERED PROFESSIONAL ENGINEER TITUS KENG No. 45226 Exp. 9-30-14 CIVIL STATE OF CALIFORNIA

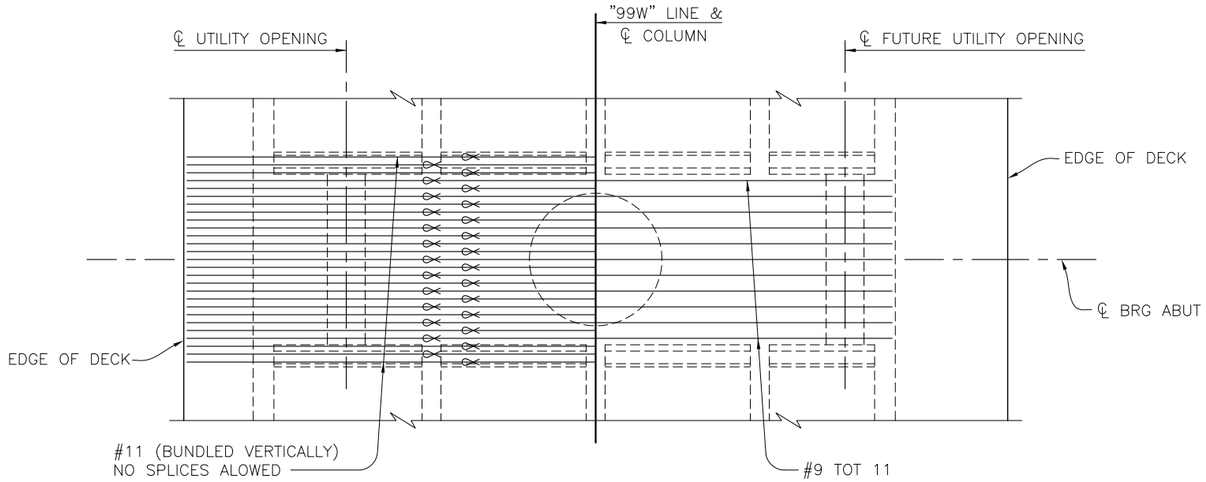


**TOP REINFORCEMENT** **BOTTOM REINFORCEMENT**

## PLAN

1/4" = 1'-0"

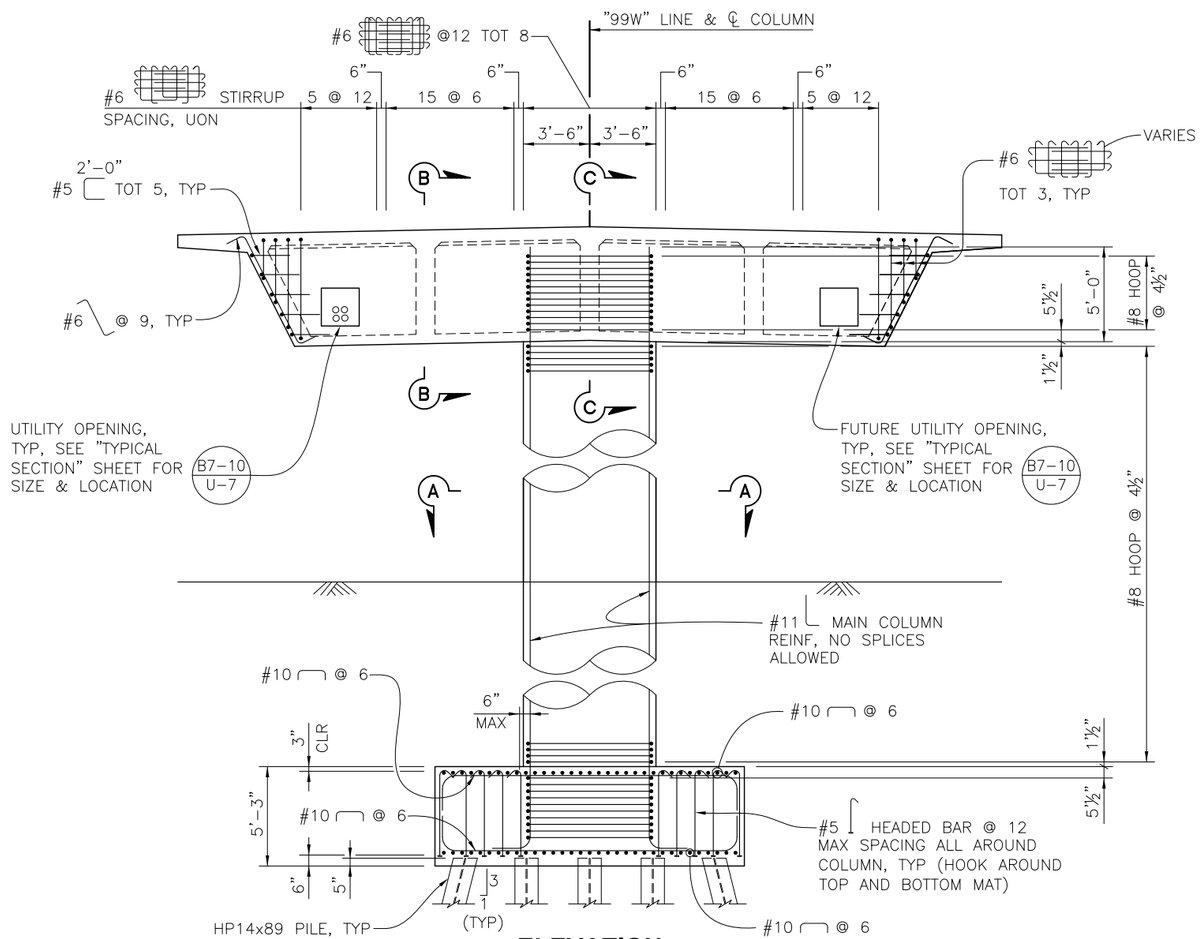


## ELEVATION

1/4" = 1'-0"

NOTES:

1. FOR SECTIONS A–A THRU C–C, SEE "PIER DETAILS NO. 2" SHEET.
2. MAIN COLUMN HOOP REINF TO MEET ULTIMATE SPLICE REQUIREMENTS.
3. PLACE STIRRUPS PARALLEL TO "99W" LINE AND SPACE ALONG ℄ BENT.

LEGEND:

——— INDICATES NEW STRUCTURE.

—⊶— DENOTES BUNDLED BARS.

FOR REFERENCE ONLY–NOT FOR BIDDING PURPOSES

HDR

HDR Engineering, Inc.
2365 Iron Point Road, Suite 300 Folsom, CA 95630

REGISTERED CIVIL ENGINEER

REGISTERED PROFESSIONAL ENGINEER
TITUS KENG
No. 45226
Exp. 9-30-14
CIVIL
STATE OF CALIFORNIA

| BRIDGE NO. |
|---|
| 08C-0377 |

| No. | REVISION: | BY: | DATE: |
|---|---|---|---|
| | | | |

These drawings are instruments of service provided by the Tehama County Public Works Dept. and are not to be used for any type of construction unless signed and sealed by a Professional Engineer in the employ of the County of Tehama

TEHAMA COUNTY
PUBLIC WORKS

9380 San Benito Ave.
Gerber, Ca. 96035
(530) 385-1462

COUNTY OF TEHAMA

HORIZ: AS SHOWN
VERT:
SCALE

DRAWN BY: J. VOUGHT
DATE: 11/01/2013
CHECKED BY: S. KOTAMALA
DATE: 7/16/2013

99W AT THOMES CREEK BRIDGE
PROJECT (REPLACE)
PIER DETAILS NO. 1

PROJECT NO.: 14-370861

SHEET NO. S-11

PAGE NO. 30/47

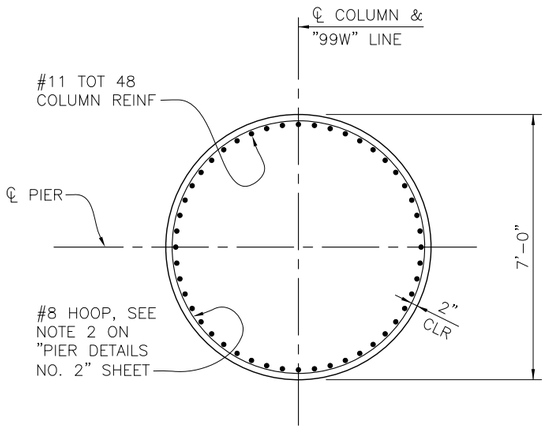


## SECTION A-A

1/2" = 1'-0"

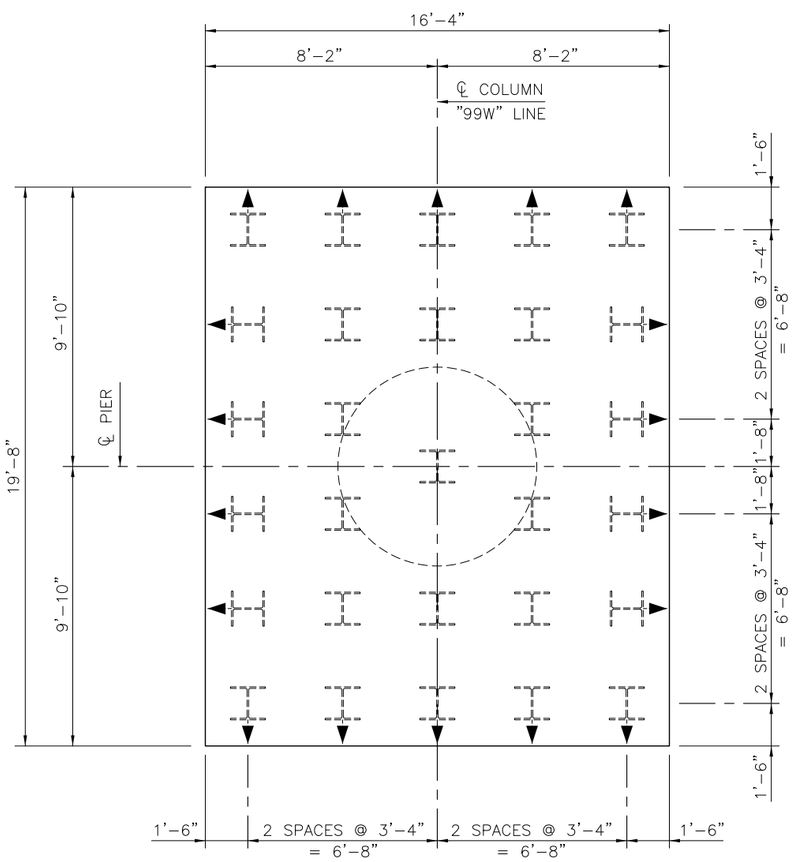


## FOOTING PLAN

3/8" = 1'-0"

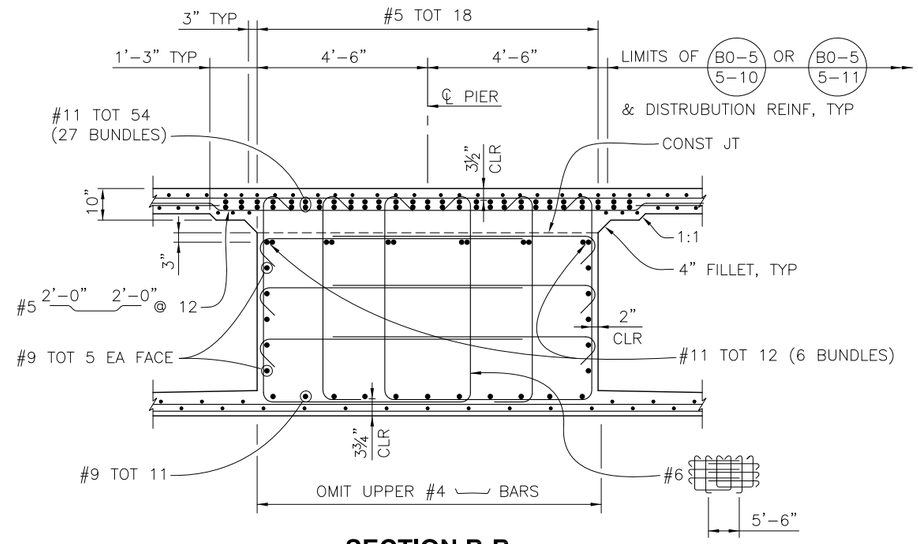


## SECTION B-B

1/2" = 1'-0"

NOTE:
ADJUST REINF AS REQUIRED TO
CLEAR PRESTRESSING DUCTS AND
COLUMN REINFORCING.

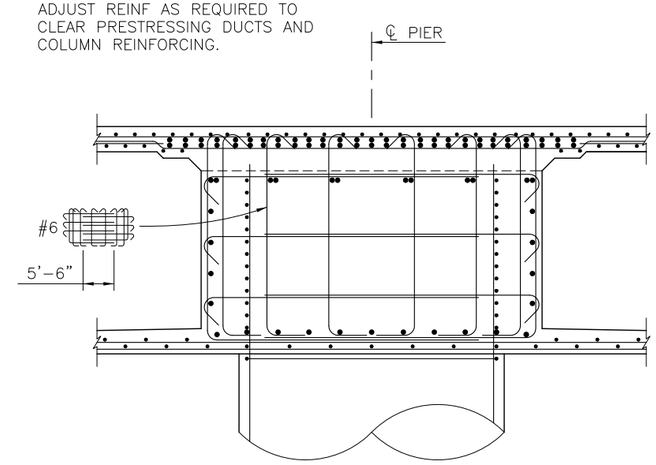


FOR INFORMATION NOT SHOWN, SEE "SECTION B-B".

## SECTION C-C

1/2" = 1'-0"

BRIDGE NO.
08C-0377

| No. | REVISION: | BY: | DATE: |
|---|---|---|---|
| | | | |

These drawings are instruments of service provided by the Tehama County Public Works Dept. and are not to be used for any type of construction unless signed and sealed by a Professional Engineer in the employ of the County of Tehama

TEHAMA COUNTY
PUBLIC WORKS

9380 San Benito Ave.
Gerber, Ca. 96035
(530) 385-1462

COUNTY OF TEHAMA

FOR REFERENCE ONLY-NOT FOR BIDDING PURPOSES

| | |
|---|---|
| SCALE | HORIZ: AS SHOWN<br>VERT: |
| DRAWN BY: | J. VOUGHT |
| DATE: | 11/01/2013 |
| CHECKED BY: | S. KOTAMALA |
| DATE: | 7/16/2013 |

99W AT THOMES CREEK BRIDGE
PROJECT (REPLACE)
PIER DETAILS NO. 2

PROJECT NO.: 14-370861

SHEET NO. S-12

PAGE NO. 31/47

HDR

HDR Engineering, Inc.
2365 Iron Point Road, Suite 300 Folsom, CA 95630

REGISTERED CIVIL ENGINEER

REGISTERED PROFESSIONAL ENGINEER
TITUS KENG
No. 45226
Exp. 9-30-14
CIVIL
STATE OF CALIFORNIA

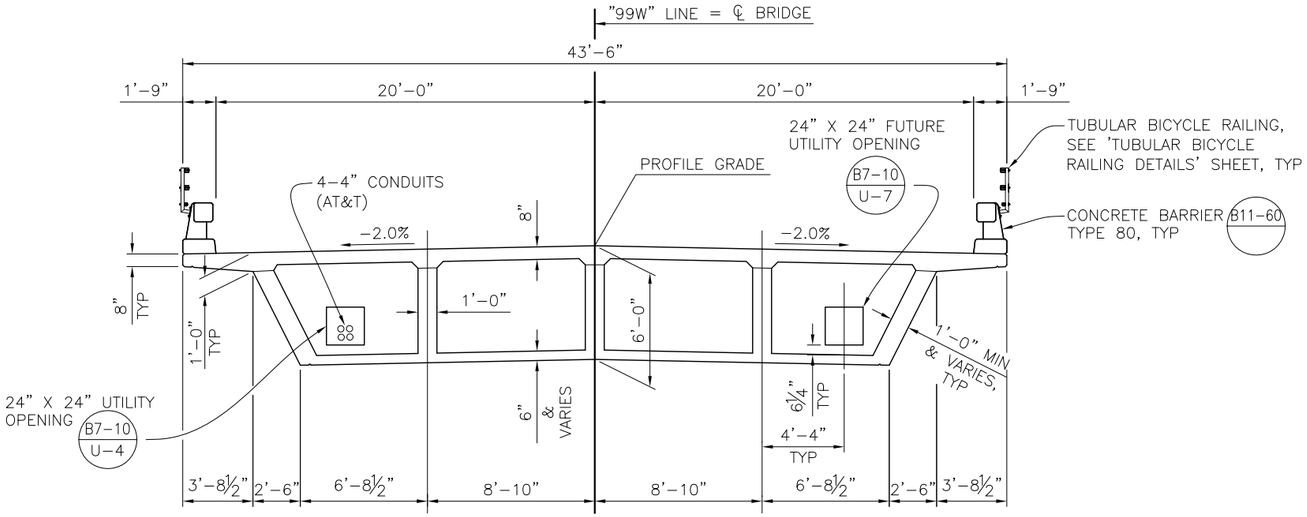


## TYPICAL SECTION

1/4" = 1'-0"

(LOOKING UP STATION)

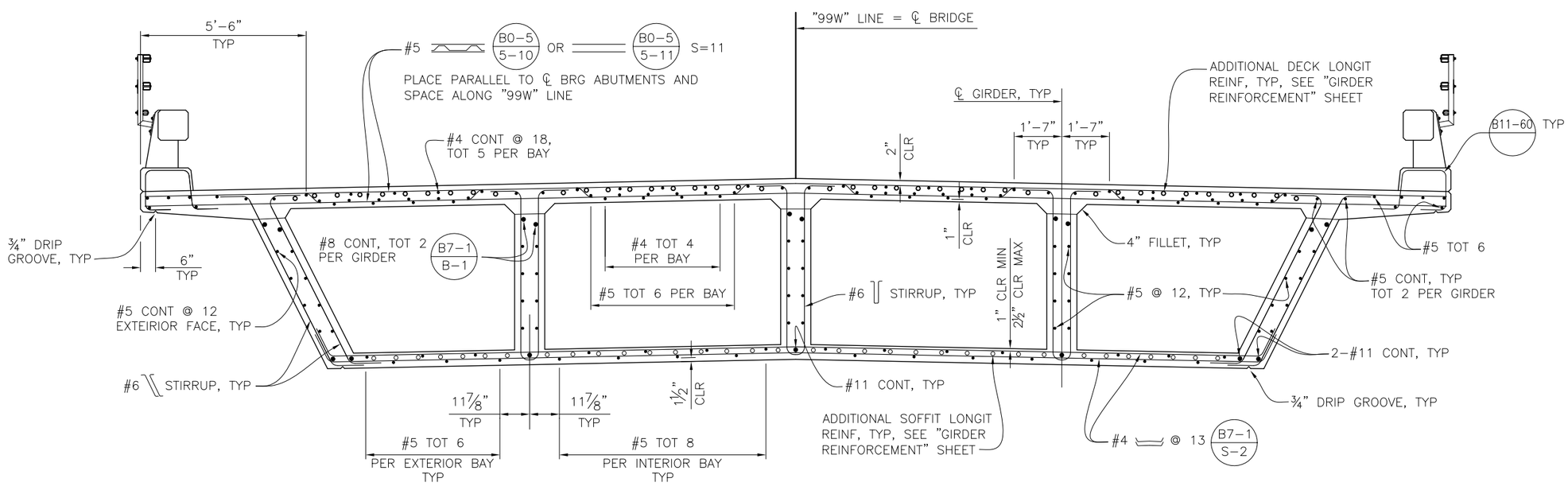


## TYPICAL SECTION

1/2" = 1'-0"

B0-5 B7-1 B8-5

## FALSEWORK RELEASE NOTES:

ALTERNATIVE 1:
FALSEWORK SHALL BE RELEASED AS SOON AS PERMITTED BY THE SPECIFICATIONS.

ALTERNATIVE 2:
FALSEWORK SHALL NOT BE RELEASED LESS THAN 28 DAYS AFTER THE LAST CONCRETE HAS BEEN PLACED.

WHEN FALSEWORK RELEASE ALTERNATIVE 2 IS USED, CAMBER VALUES ARE 0.75 TIME THOSE SHOWN.

## NOTES:

1. FOR ADDITIONAL INFORMATION, SEE "GIRDER REINFORCEMENT" SHEET.

BRIDGE NO. 08C-0377

| No. | REVISION: | BY: | DATE: |
|---|---|---|---|

These drawings are instruments of service provided by the Tehama County Public Works Dept. and are not to be used for any type of construction unless signed and sealed by a Registered Engineer in the employ of the County of Tehama

FOR REFERENCE ONLY--NOT FOR BIDDING PURPOSES

TEHAMA COUNTY PUBLIC WORKS
9380 San Benito Ave.
Gerber, Ca. 96035
(530) 385-1462

| SCALE | |
|---|---|
| HORIZ: AS SHOWN | |
| VERT: AS SHOWN | |
| DRAWN BY: J. GREEN | DATE: 11/01/2013 |
| CHECKED BY: S. KOTAMALA | DATE: 7/16/2013 |

99W AT THOMES CREEK BRIDGE
PROJECT (REPLACE)
TYPICAL SECTION

PROJECT NO.: 14-370861

HDR
HDR Engineering, Inc.
2365 Iron Point Road, Suite 300 Folsom, CA 95630

REGISTERED CIVIL ENGINEER

REGISTERED PROFESSIONAL ENGINEER TITUS KENG No. 45226 Exp. 9-30-14 CIVIL STATE OF CALIFORNIA

| SHEET NO. | PAGE NO. |
|---|---|
| S-13 | 32/47 |

BRIDGE NO. 08C-0377

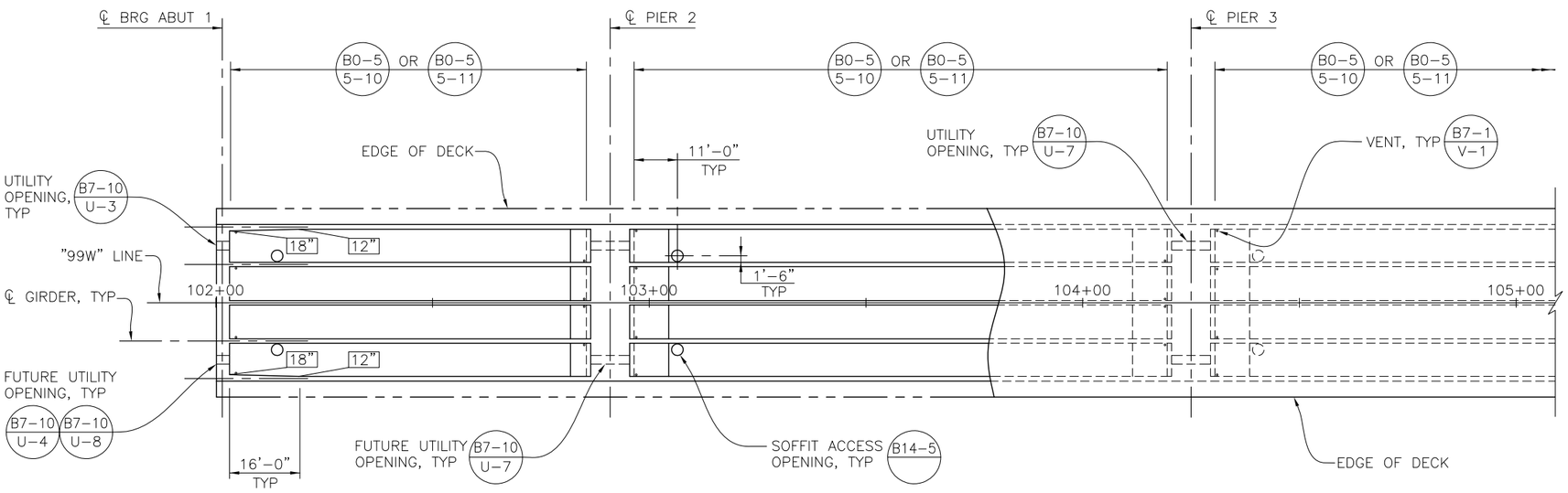


LEGEND:

INDICATES GIRDER FLARE WIDTH (B7-1 / S-3)

## GIRDER LAYOUT (B8-5)

1/16" = 1'-0"

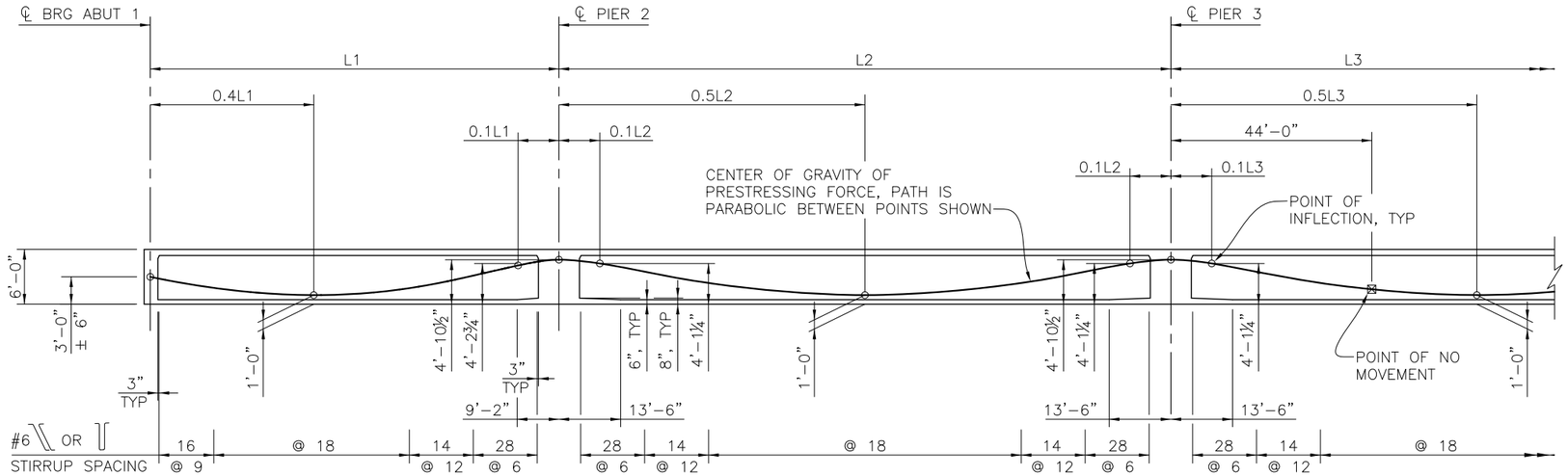


## LONGITUDINAL SECTION (B0-5 / B7-1 / B8-5)

1/16" = 1'-0" HORIZ
1/8" = 1'-0" VERT

## PRESTRESSING NOTES:

270 KSI LOW RELAXATION STRAND:
PJACK = 8000 KIPS
ANCHOR SET = ⅜"
TOTAL NUMBERS OF GIRDERS = 5
DISTRIBUTION OF PRESTRESS FORCE (PJACK) BETWEEN GIRDERS SHALL NOT EXCEED THE RATIO OF 3:2. MAXIMUM FINAL FORCE VARIATION BETWEEN GIRDERS SHALL NOT EXCEED 725 KIPS.

CONCRETE: f'c = 4000 PSI @ 28 DAYS
f'ci = 3500 PSI @ TIME OF STRESSING

CONTRACTOR SHALL SUBMIT ELONGATION CALCULATIONS BASED ON INITIAL STRESS AT POINT OF NO MOVEMENT AT ☒ = 0.7990 TIMES JACKING STRESS.

STRESSING SHALL BE PERFORMED FROM BOTH ENDS. DESIGN IS BASED ON $\mu$ = 0.15 AND K = 0.0002.

## NOTE:

1. FOR CONTINUATION OF GIRDER LAYOUT, SEE "GIRDER LAYOUT NO. 2" SHEET.

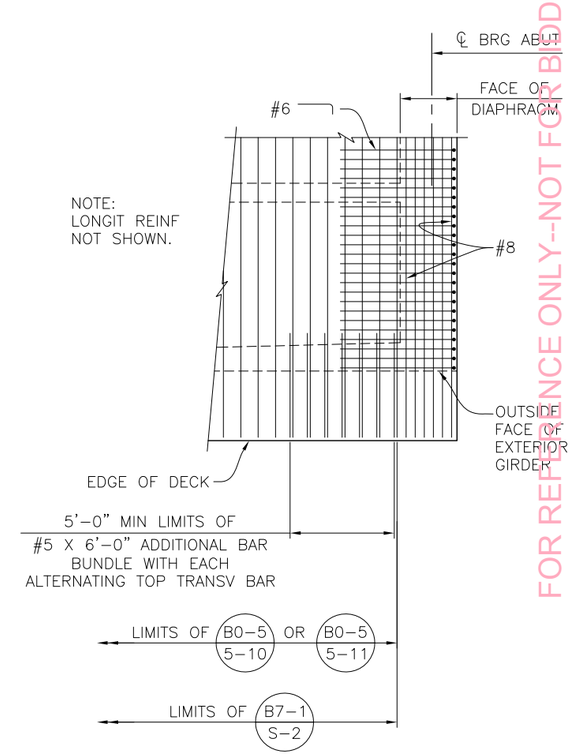


## DETAIL 1

1/4" = 1'-0"

FOR REFERENCE ONLY-NOT FOR BIDDING PURPOSES

| No. | REVISION: | BY: | DATE: |
|---|---|---|---|
| | | | |

These drawings are instruments of service provided by the Tehama County Public Works Dept. and are not to be used for any type of construction unless signed and sealed by a Registered Engineer in the employ of the County of Tehama

TEHAMA COUNTY PUBLIC WORKS
9380 San Benito Ave.
Gerber, Ca. 96035
(530) 385-1462

HORIZ: AS SHOWN
VERT: AS SHOWN
SCALE
DRAWN BY: J. VOUGHT DATE: 11/01/2013
CHECKED BY: S. KOTAMALA DATE: 7/16/2013

99W AT THOMES CREEK BRIDGE
PROJECT (REPLACE)
GIRDER LAYOUT NO. 1

HDR
HDR Engineering, Inc.
2365 Iron Point Road, Suite 300 Folsom, CA 95630

REGISTERED CIVIL ENGINEER

REGISTERED PROFESSIONAL ENGINEER TITUS KENG No. 45226 Exp. 9-30-14 CIVIL STATE OF CALIFORNIA

PROJECT NO.: 14-370861

| SHEET NO. | PAGE NO. |
|---|---|
| S-14 | 33/47 |

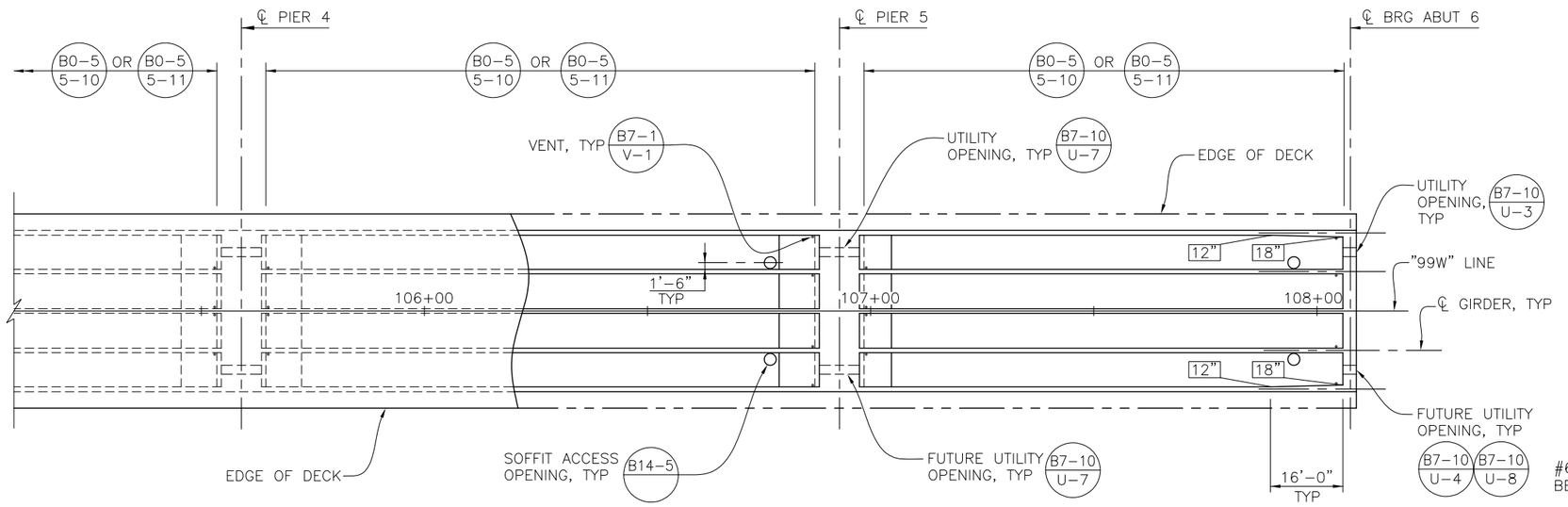


LEGEND:

INDICATES GIRDER FLARE WIDTH B7-1 S-3

## GIRDER LAYOUT B8-5

1/16" = 1'-0"

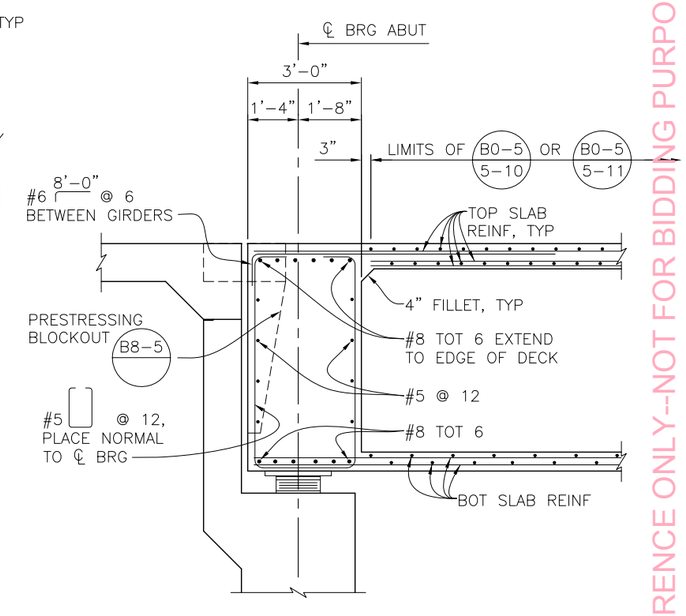


## END DIAPHRAGM SECTION

1/2" = 1'-0"

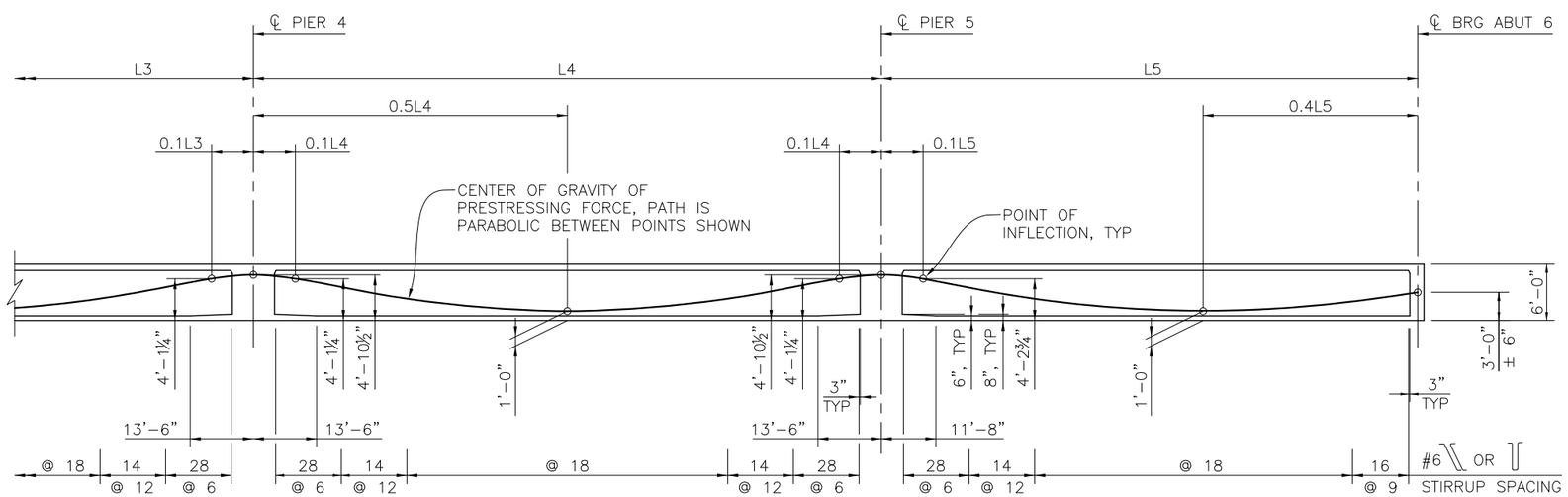


## LONGITUDINAL SECTION B0-5 B7-1 B8-5

1/16" = 1'-0" HORIZ
1/8" = 1'-0" VERT

NOTE:

1. FOR NOTES, SEE "GIRDER LAYOUT NO. 1" SHEET.
2. FOR PRESTRESSING NOTES, SEE "GIRDER LAYOUT NO. 1" SHEET.

HDR

HDR Engineering, Inc.
2365 Iron Point Road, Suite 300 Folsom, CA 95630

REGISTERED CIVIL ENGINEER

REGISTERED PROFESSIONAL ENGINEER
TITUS KENG
No. 45226
Exp. 9-30-14
CIVIL
STATE OF CALIFORNIA

FOR REFERENCE ONLY-NOT FOR BIDDING PURPOSES

BRIDGE NO. 08C-0377

| No. | REVISION: | BY: | DATE: |
|---|---|---|---|
| | | | |

These drawings are instruments of service provided by the Tehama County Public Works Dept. and are not to be used for any type of construction unless signed and sealed by a Professional Engineer in the employ of the County of Tehama

TEHAMA COUNTY PUBLIC WORKS
9380 San Benito Ave.
Gerber, Ca. 96035
(530) 385-1462

COUNTY OF TEHAMA

| SCALE | HORIZ: AS SHOWN | VERT: AS SHOWN |
|---|---|---|
| DRAWN BY: J. VOUGHT | DATE: 11/01/2013 | |
| CHECKED BY: S. KOTAMALA | DATE: 7/16/2013 | |

99W AT THOMES CREEK BRIDGE
PROJECT (REPLACE)
GIRDER LAYOUT NO. 2

PROJECT NO.: 14-370861

| SHEET NO. | PAGE NO. |
|---|---|
| S-15 | 34/47 |

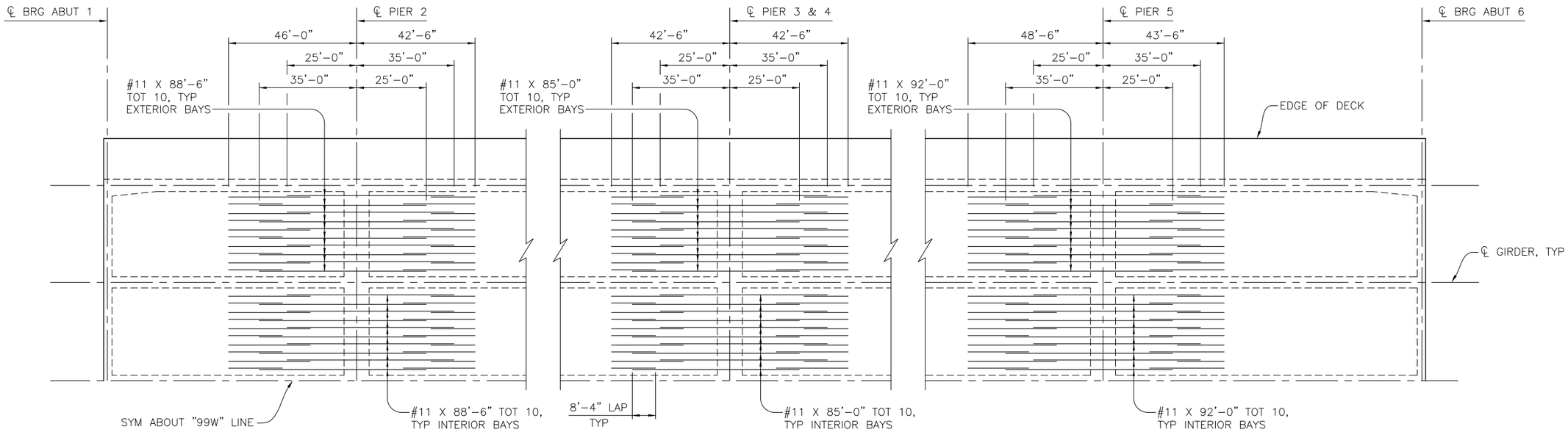


## DECK LONGITUDINAL REINFORCEMENT

NO SCALE

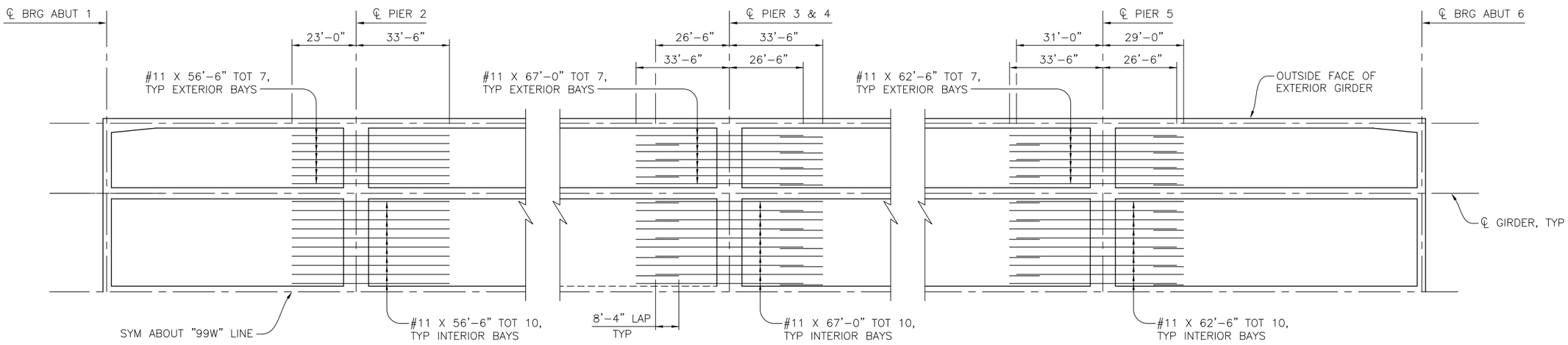


## SOFFIT LONGITUDINAL REINFORCEMENT

NO SCALE

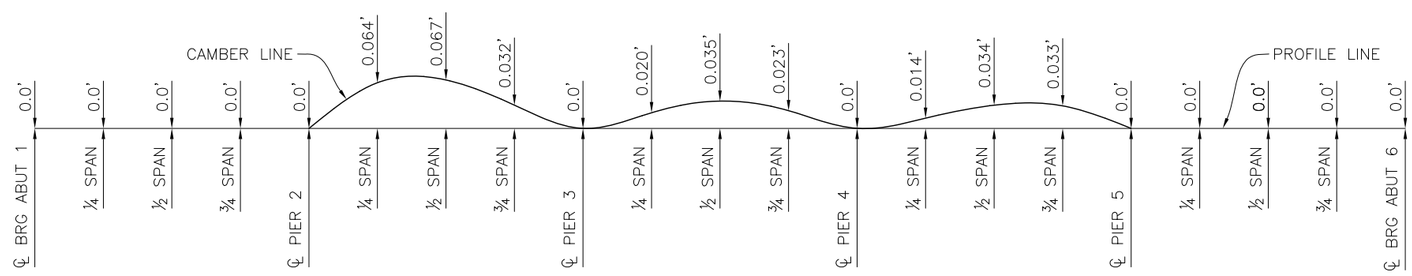


## CAMBER DIAGRAM

NO SCALE

(DOES NOT INCLUDE ALLOWANCE FOR FALSEWORK SETTLEMENT)

BRIDGE NO. 08C-0377

| No. | REVISION: | BY: | DATE: |
|---|---|---|---|
| | | | |

These drawings are instruments of service provided by the Tehama County Public Works Dept. and are not to be used for any type of construction unless signed and sealed by a Professional Engineer in the employ of the County of Tehama

TEHAMA COUNTY PUBLIC WORKS

9380 San Benito Ave.
Gerber, Ca. 96035
(530) 385-1462

FOR REFERENCE ONLY-NOT FOR BIDDING PURPOSES

| SCALE | |
|---|---|
| HORIZ: AS SHOWN | |
| VERT: | |
| DRAWN BY: J. VOUGHT | DATE: 11/01/2013 |
| CHECKED BY: S. KOTAMALA | DATE: 7/16/2013 |

99W AT THOMES CREEK BRIDGE
PROJECT (REPLACE)
GIRDER REINFORCEMENT

HDR

HDR Engineering, Inc.
2365 Iron Point Road, Suite 300 Folsom, CA 95630

REGISTERED CIVIL ENGINEER

REGISTERED PROFESSIONAL ENGINEER
TITUS KENG
No. 45226
Exp. 9-30-14
CIVIL
STATE OF CALIFORNIA

PROJECT NO.: 14-370861

| SHEET NO. | PAGE NO. |
|---|---|
| S-16 | 35/47 |

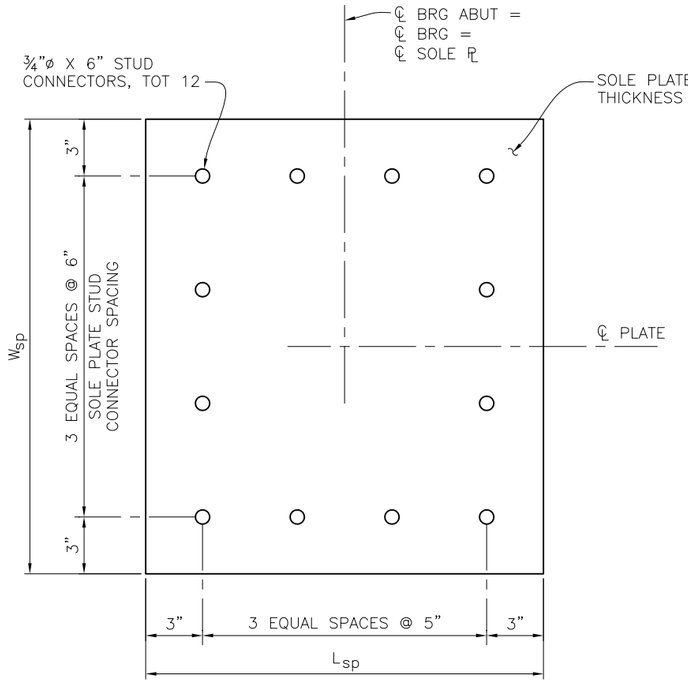


## SOLE PLATE

3" = 1'-0"

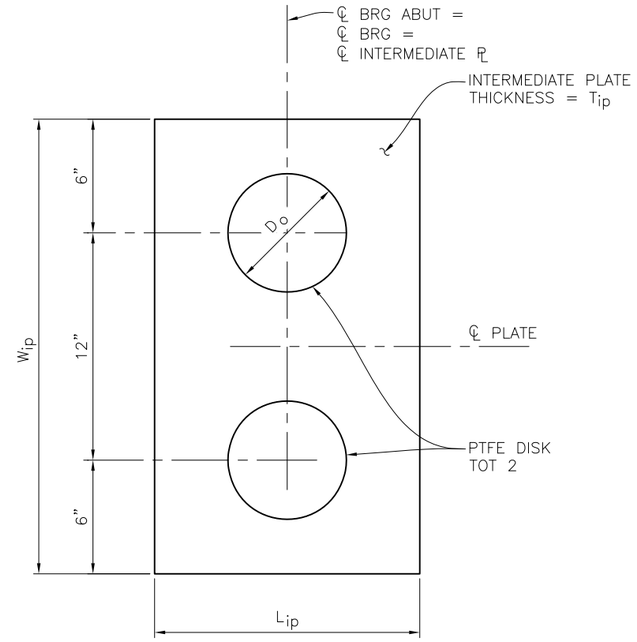


## INTERMEDIATE PLATE

3" = 1'-0"

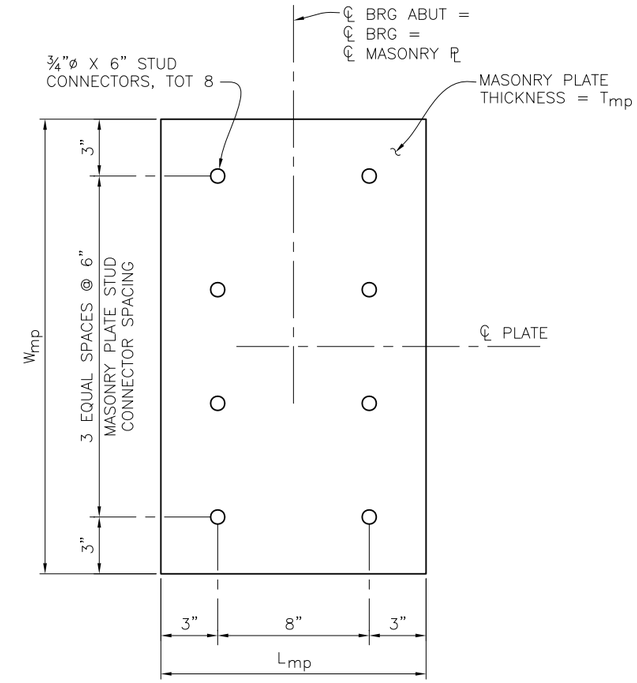


## MASONRY PLATE

3" = 1'-0"

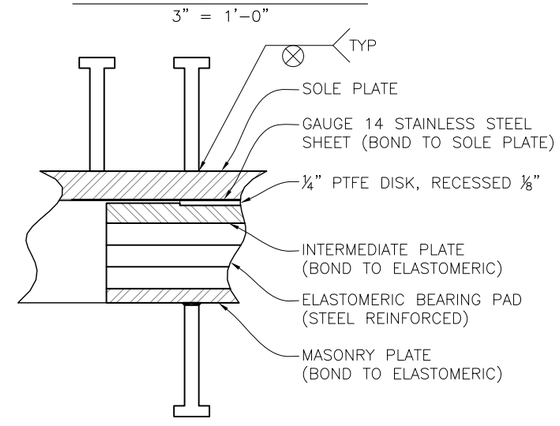


## DETAIL 1

NO SCALE

NOTES:

1. BEARING PLATES SHALL BE PLACED LEVEL.
2. FOR DIMENSION "a" SEE "JOINT SEAL – ABUTMENT DETAILS, MOVEMENT RATING GREATER THAN 4"" SHEET.
3. STEEL PLATES MUST COMPLY WITH ASTM–A–709/A–709M GRADE 36.

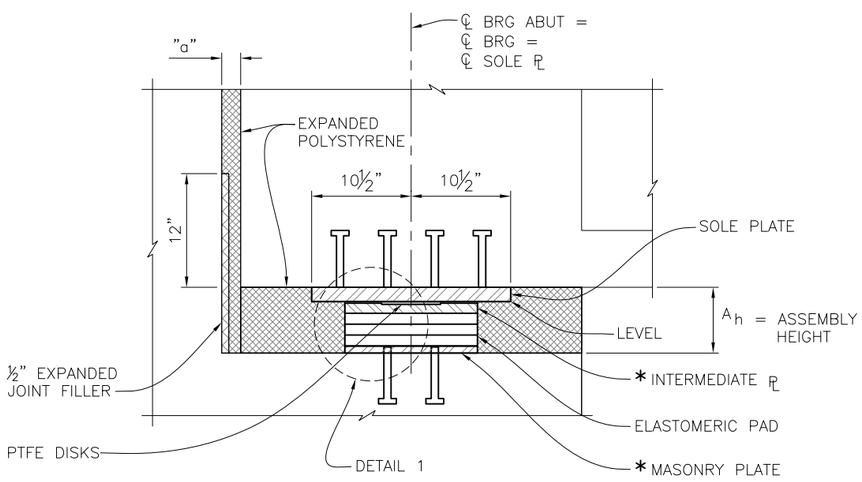


* GRIND FRONT AND BACK TO ¼" BEVEL AFTER FABRICATION

## BEARING DETAIL

3" = 1'-0"

## PTFE/ELASTOMERIC BEARING PAD

| LOCATION | MAXIMUM VERTICAL LOAD (kips) PER BEARING | MINIMUM VERTICAL LOAD (kips) PER BEARING | SOLE PLATE | | | PTFE DISK | INTERMEDIATE PLATE | | | STEEL REINFORCED ELASTOMERIC PAD | | | MASONRY PLATE | | | ASSEMBLY HEIGHT |
|---|---|---|---|---|---|---|---|---|---|---|---|---|---|---|---|---|
| | | | $L_{sp}$ | $W_{sp}$ | $T_{sp}$ | $D_o$ | $L_{ip}$ | $W_{ip}$ | $T_{ip}$ | $L_{ep}$ | $W_{ep}$ | $T_{ep}$ | $L_{mp}$ | $W_{mp}$ | $T_{mp}$ | $A_h$ |
| ABUT 1 | 185.0 | 100.0 | 21" | 24" | 1½" | 5¾" | 14" | 24" | 1⅛" | 14" | 24" | 3" | 14" | 24" | ¾" | 7" |
| ABUT 6 | 225.0 | 131.0 | 21" | 32" | 1½" | 6¼" | 14" | 24" | 1⅛" | 14" | 24" | 3" | 14" | 24" | ¾" | 7" |

HDR

HDR Engineering, Inc.
2365 Iron Point Road, Suite 300 Folsom, CA 95630

REGISTERED CIVIL ENGINEER

REGISTERED PROFESSIONAL ENGINEER
TITUS KENG
No. 45226
Exp. 9-30-14
CIVIL
STATE OF CALIFORNIA

BRIDGE NO.
08C-0377

| No. | REVISION: | BY: | DATE: |
|---|---|---|---|
| | | | |

These drawings are instruments of service provided by the Tehama County Public Works Dept. and are not to be used for any type of construction unless signed and sealed by a Professional Engineer in the employ of the County of Tehama

TEHAMA COUNTY
PUBLIC WORKS

9380 San Benito Ave.
Gerber, Ca. 96035
(530) 385-1462

COUNTY OF TEHAMA

FOR REFERENCE ONLY-NOT FOR BIDDING PURPOSES

| SCALE | |
|---|---|
| HORIZ: AS SHOWN | |
| VERT: | |
| DRAWN BY: J. GREEN | DATE: 11/01/2013 |
| CHECKED BY: S. KOTAMALA | DATE: 7/16/2013 |

99W AT THOMES CREEK BRIDGE
PROJECT (REPLACE)
PTFE / ELASTOMERIC BEARING DETAILS

PROJECT NO.: 14-370861

SHEET NO. S-17

PAGE NO. 36/47

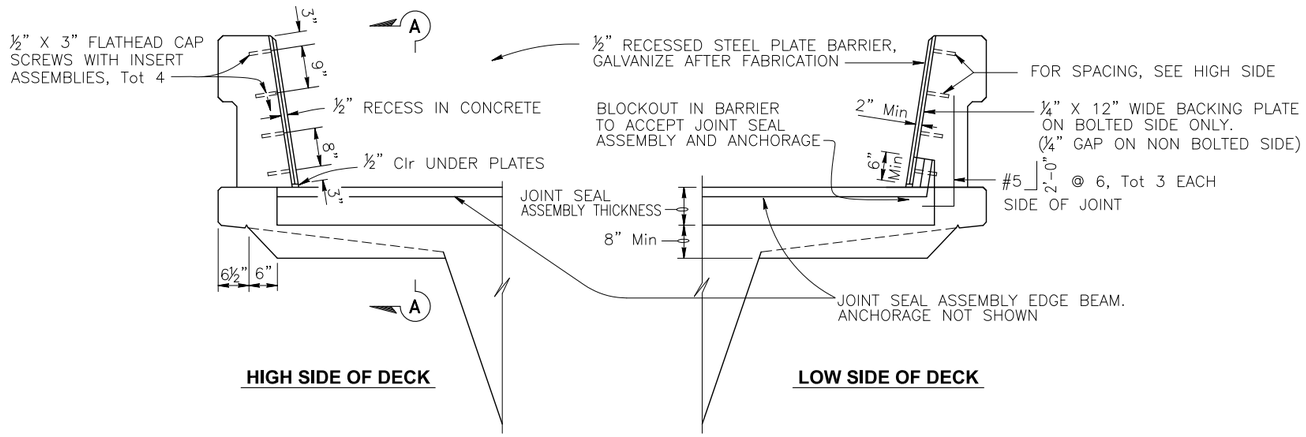


## SEAL INSTALLATION

¾" = 1'-0"

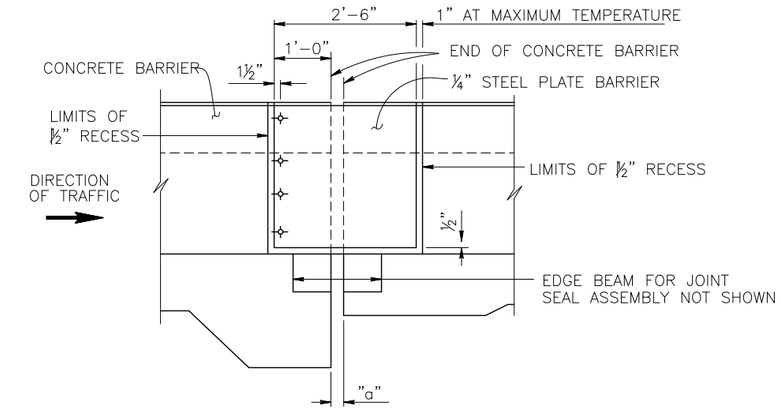


## ELEVATION A-A

¾" = 1'-0"

| JOINT INFORMATION | | | "a" DIMENSIONS | | |
|---|---|---|---|---|---|
| LOCATION | MOVEMENT RATING (MR) | SKEW | WINTER | SPRING & FALL | SUMMER |
| ABUT 1 | 3.5" | 0 | 1⅞" | 1½" | 1" |
| ABUT 6 | 4.5" | 0 | 2¼" | 1¾" | 1⅛" |

NOTES:
1. FOR DETAILS NOT SHOWN, SEE PROJECT PLANS.
2. X IS GREATER THAN OR EQUAL TO Y.

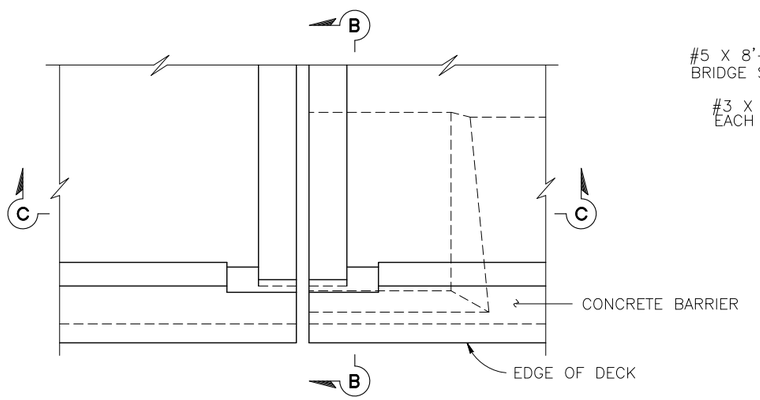


## PLAN - DECK JOINT

¾" = 1'-0"

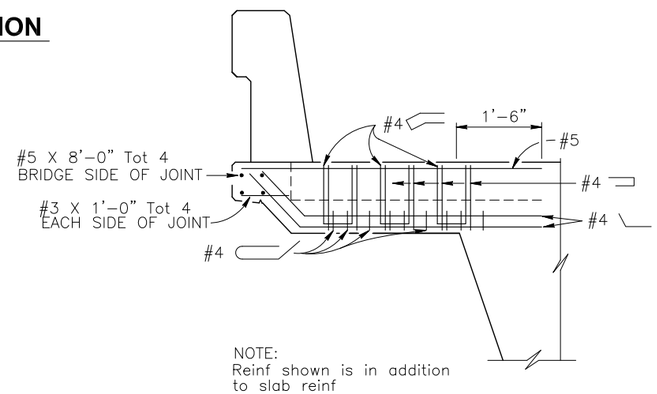


NOTE:
Reinf shown is in addition to slab reinf

## SECTION B-B

¾" = 1'-0"

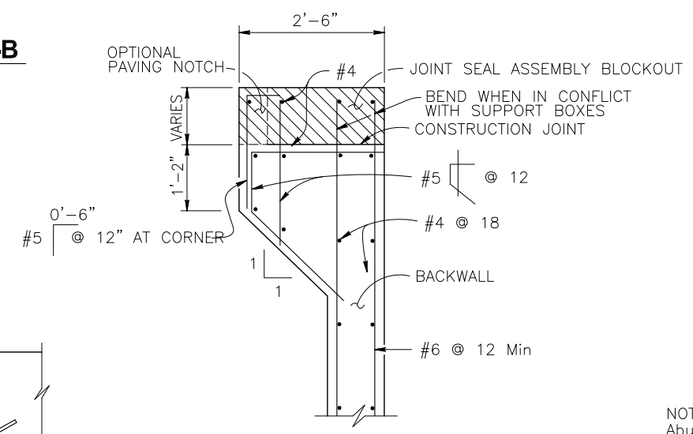


## DETAIL E

¾" = 1'-0"

BACKWALL WITHOUT APPROACH SLAB

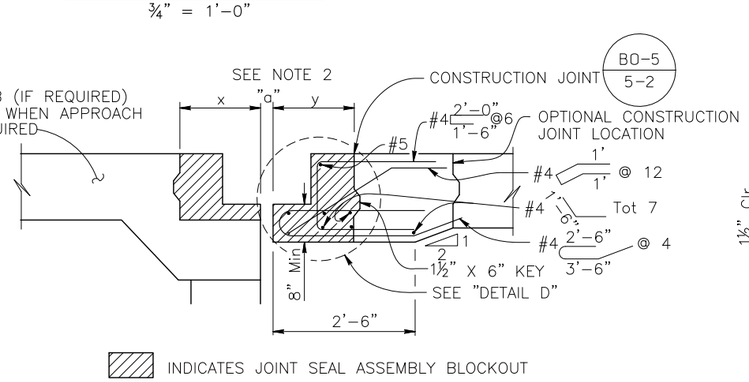


## SECTION C-C

¾" = 1'-0"

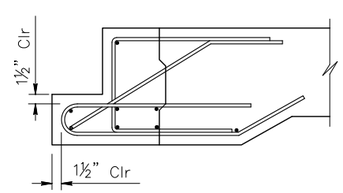


## DETAIL D

1" = 1'-0"

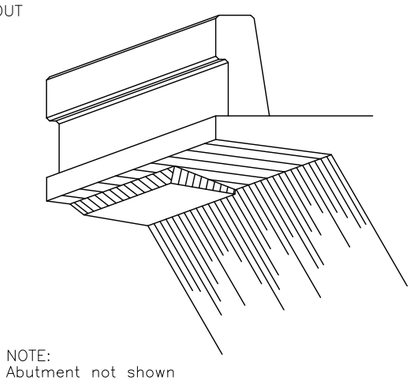

NOTE:
Abutment not shown

## DECK OVERHANG AT ABUTMENT

NO SCALE

BRIDGE NO. 08C-0377

| No. | REVISION: | BY: | DATE: |
|---|---|---|---|
| | | | |

These drawings are instruments of service provided by the Tehama County Public Works Dept. and are not to be used for any type of construction unless signed and sealed by a Registered Engineer in the employ of the County of Tehama

FOR REFERENCE ONLY-NOT FOR BIDDING PURPOSES

TEHAMA COUNTY PUBLIC WORKS
9380 San Benito Ave.
Gerber, Ca. 96035
(530) 385-1462

HORIZ: AS SHOWN
VERT:
SCALE
DRAWN BY: J. GREEN DATE: 11/01/2013
CHECKED BY: S. KOTAMALA DATE: 7/16/2013

99W AT THOMES CREEK BRIDGE
PROJECT (REPLACE)
JOINT SEAL - ABUTMENT DETAILS
MOVEMENT RATING GREATER THAN 4"

PROJECT NO.: 14-370861

SHEET NO. S-18 PAGE NO. 37/47

HDR
HDR Engineering, Inc.
2365 Iron Point Road, Suite 300 Folsom, CA 95630

REGISTERED CIVIL ENGINEER

REGISTERED PROFESSIONAL ENGINEER TITUS KENG No. 45226 Exp. 9-30-14 CIVIL STATE OF CALIFORNIA

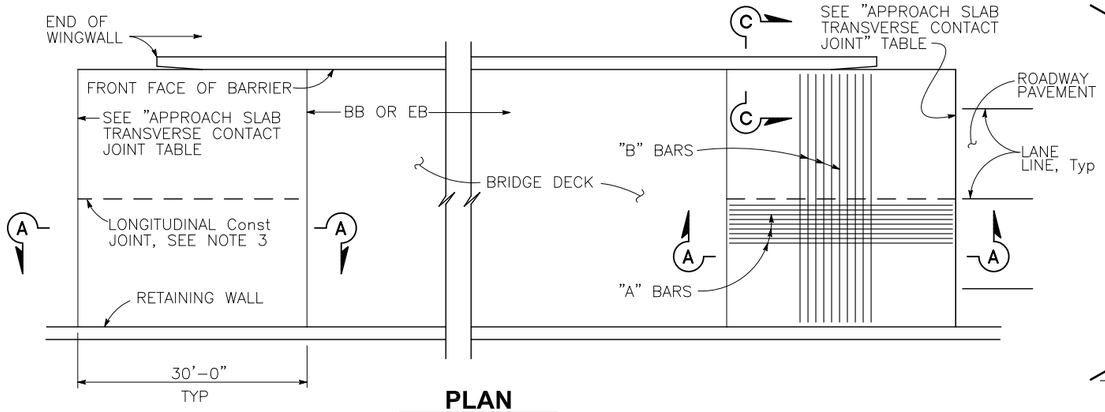


## PLAN

SCALE: 1" = 10'

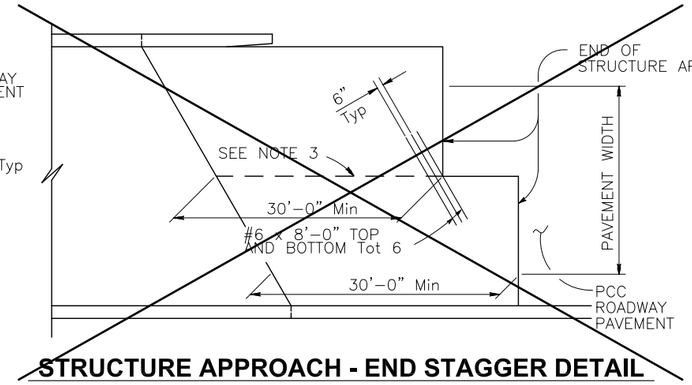


## STRUCTURE APPROACH - END STAGGER DETAIL

NO SCALE

| APPROACH SLAB TRANSVERSE CONTACT JOINT | | |
|---|---|---|
| APPROACH SKEW | WITH AC ROADWAY PAVEMENT | WITH PCC ROADWAY PAVEMENT |
| < 20° | PARALLEL TO FACE OF PN | PARALLEL TO FACE OF PN |
| 20° – 45° | PARALLEL TO FACE OF PN USE "DETAIL A" | STAGGER LINES 24" TO 36" APART |
| > 45° | PARALLEL TO FACE OF PN USE "DETAIL A" | STAGGER AT EACH LANE LINE |

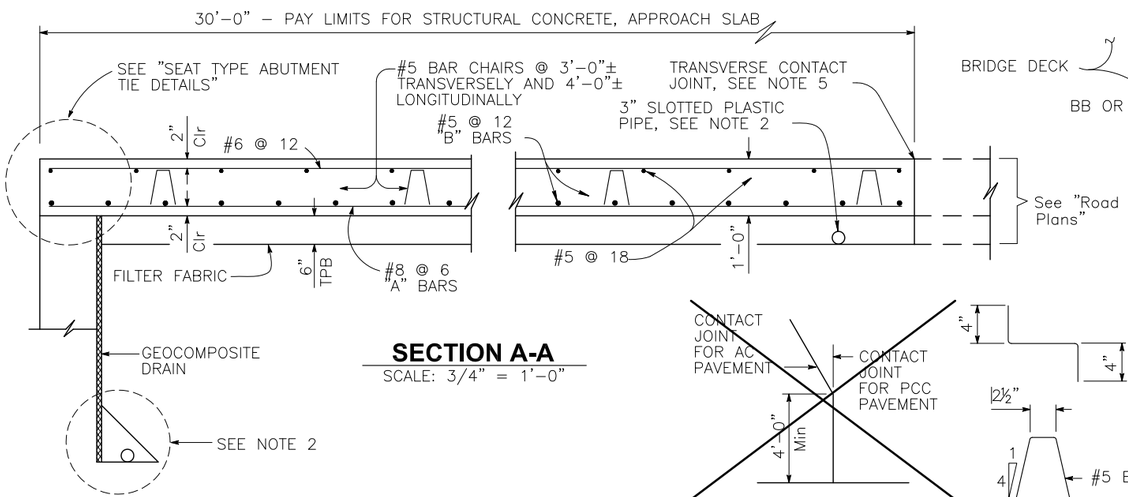


## SECTION A-A

SCALE: 3/4" = 1'-0"

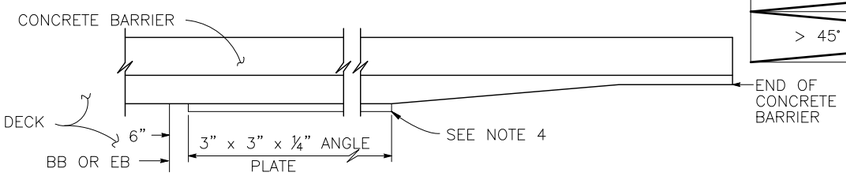


## EDGE ANGLE DETAIL

SCALE: 1/2" = 1'-0"




## DETAIL A

NO SCALE

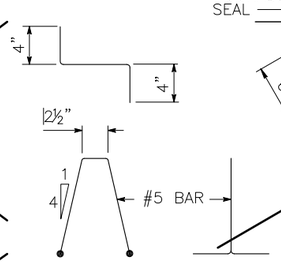


## BAR CHAIR DETAIL

SCALE: 1 1/2" = 1'-0"

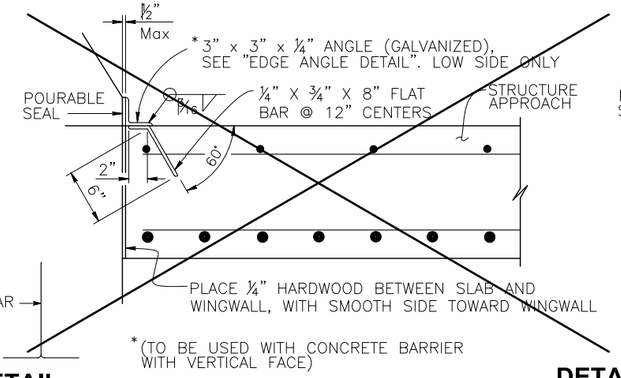


## DETAIL B

SCALE: 1 1/2" = 1'-0"

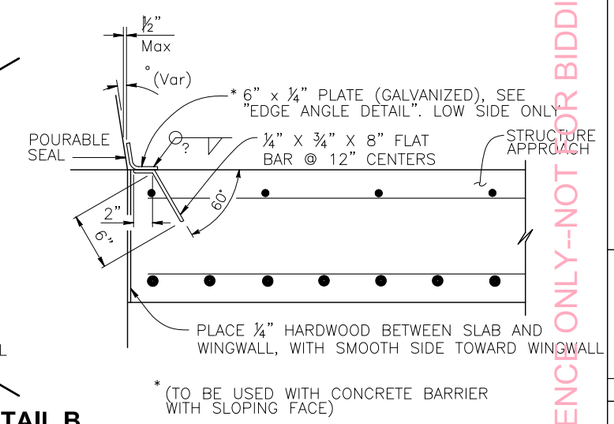


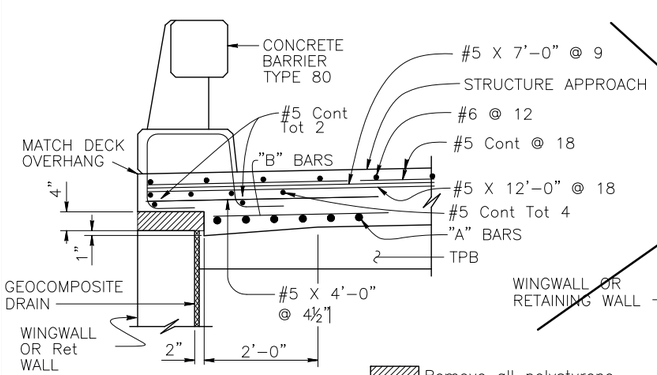


## SECTION C-C

SCALE: 3/4" = 1'-0"

(Type E-1 to be used, unless otherwise shown on plans)

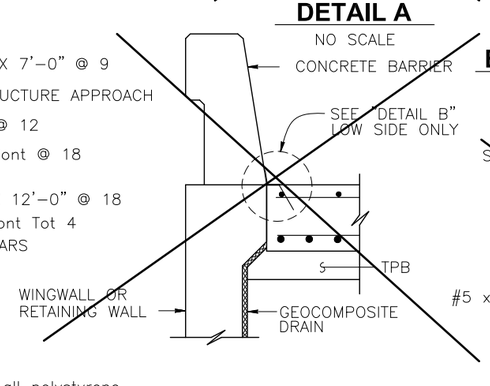


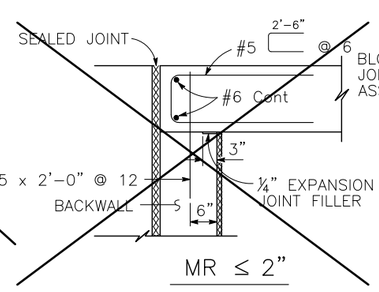


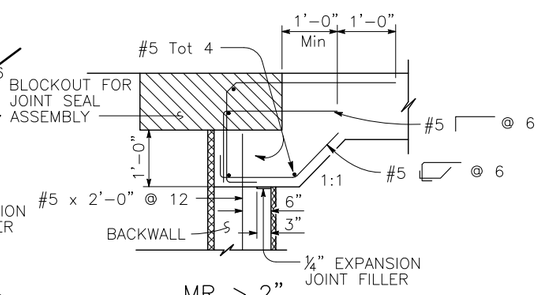


## SEAT TYPE ABUTMENT TIE DETAILS (SEE NOTE 1)

SCALE: 3/4" = 1'-0"

NOTES:

1. FOR DETAILS NOT SHOWN, SEE STRUCTURE PLANS.
2. FOR DRAINAGE DETAILS, SEE "STRUCTURE APPROACH DRAINAGE DETAILS" SHEET.
3. LONGITUDINAL CONSTRUCTION JOINTS, WHEN PERMITTED BY THE ENGINEER, SHALL BE LOCATED ON LANE LINES.
4. END ANGLE OR PLATE AT BEGINNING OF BARRIER TRANSITION, END OF WINGWALL OR END OF STRUCTURE APPROACH AS APPLICABLE.
5. FOR TRANSVERSE CONTACT JOINT WITH NEW PCC PAVING, REFER TO STANDARD PLAN P10.
6. AT THE CONTRACTOR'S OPTION, APPROACH SLAB TRANSVERSE REINFORCEMENT MAY BE PLACED PARALLEL TO PAVING NOTCH. SPACING OF TRANSVERSE REINFORCEMENT IS MEASURED ℄ ALONG ROADWAY.

FOR REFERENCE ONLY--NOT FOR BIDDING PURPOSES

BRIDGE NO. 08C-0377

| No. | REVISION: | BY: | DATE: |
|---|---|---|---|

These drawings are instruments of service provided by the Tehama County Public Works Dept. and are not to be used for any type of construction unless signed and sealed by a Registered Engineer in the employ of the County of Tehama

TEHAMA COUNTY PUBLIC WORKS
9380 San Benito Ave.
Gerber, Ca. 96035
(530) 385-1462

HORIZ: AS SHOWN
VERT:
SCALE
DRAWN BY: J. GREEN
DATE: 11/01/2013
CHECKED BY: S. KOTAMALA
DATE: 7/16/2013

99W AT THOMES CREEK BRIDGE
PROJECT ( REPLACE )
STRUCTURE APPROACH TYPE N ( 30S)

PROJECT NO.: 14-370861

HDR
HDR Engineering, Inc.
2365 Iron Point Road, Suite 300 Folsom, CA 95630

REGISTERED CIVIL ENGINEER

REGISTERED PROFESSIONAL ENGINEER TITUS KENG No. 45226 Exp. 9-30-14 CIVIL STATE OF CALIFORNIA

| SHEET NO. | PAGE NO. |
|---|---|
| S-19 | 38/47 |

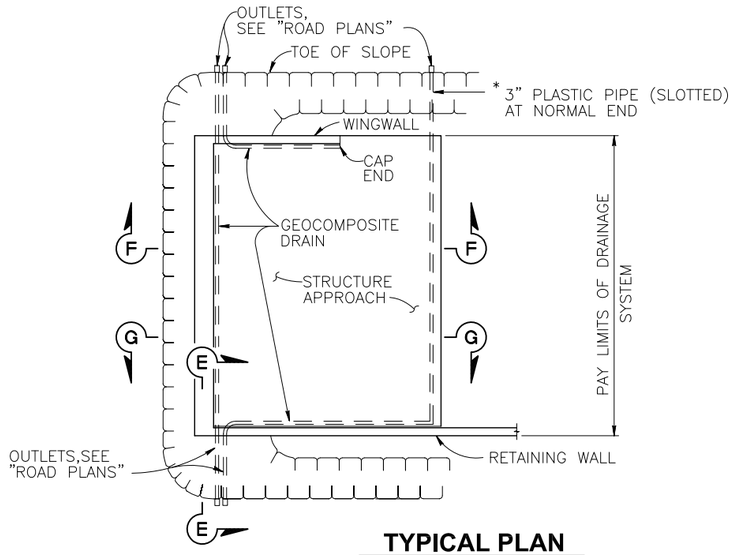


## TYPICAL PLAN

SCALE: 1" = 10'

* FOR PIPE LAYOUT AT STAGGERED END, SEE "DETAIL B"

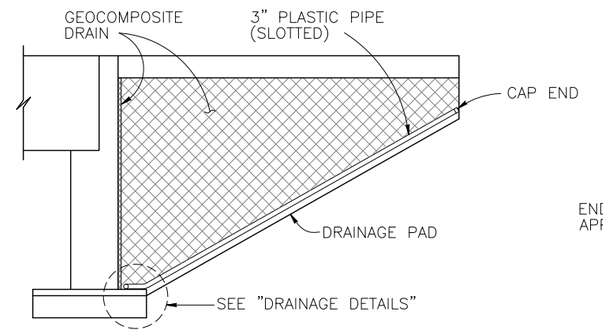


**CANTILEVER WINGWALL**

## SECTION F-F

SCALE: 1/4" = 1'-0"

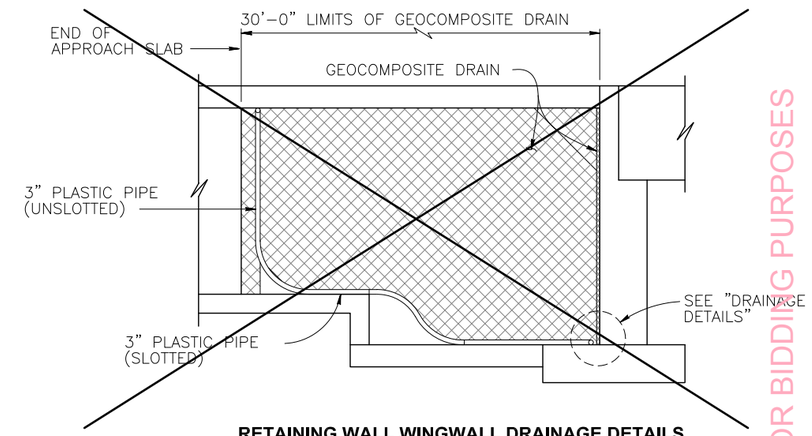


**RETAINING WALL WINGWALL DRAINAGE DETAILS**

## SECTION G-G

SCALE: 1/4" = 1'-0"

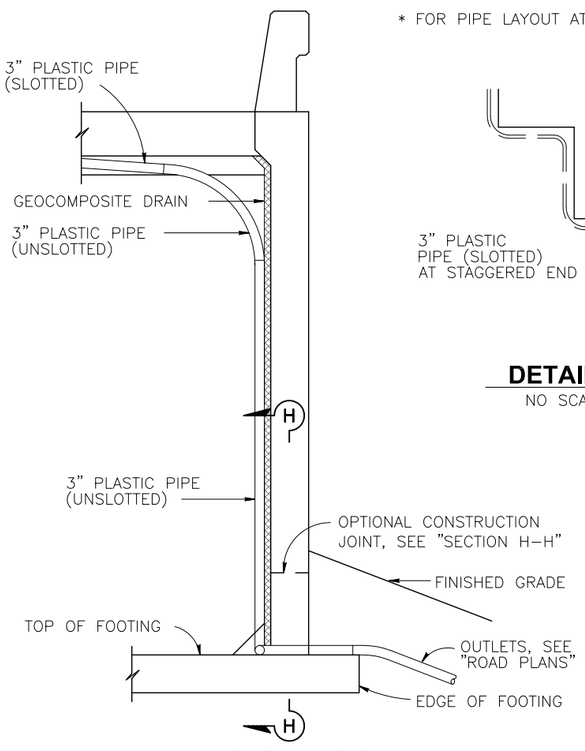


## SECTION E-E

SCALE: 1/2" = 1'-0"

NOTE: Bends and junctions in 3" plastic pipe are 30" radius Min

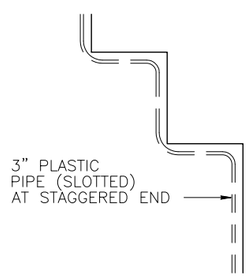


## DETAIL B

NO SCALE

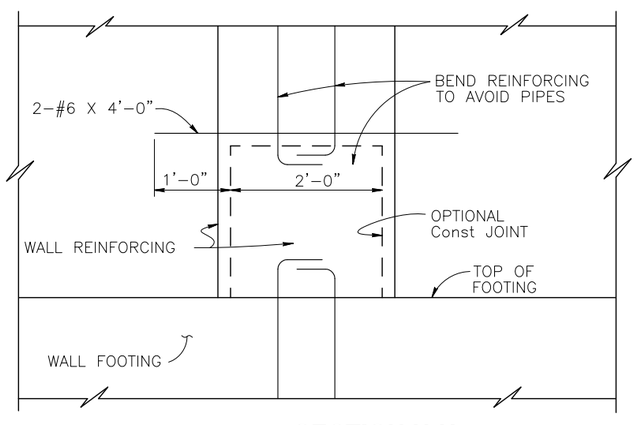


## SECTION H-H

SCALE: 1" = 1'-0"

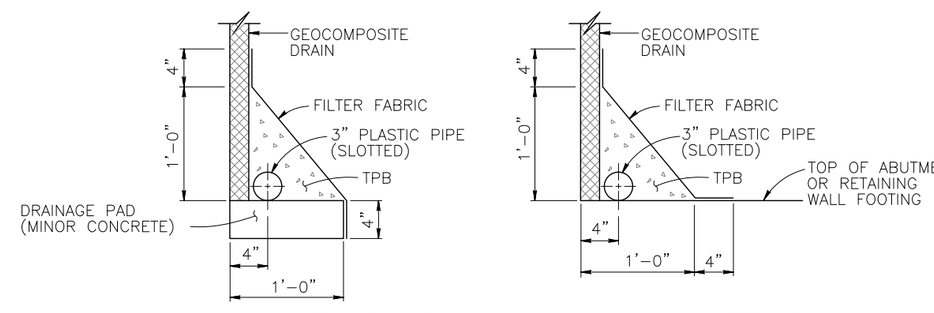


**WITHOUT FOOTING** **WITH FOOTING**

## DRAINAGE DETAILS

SCALE: 1/2" = 1'-0"

FOR REFERENCE ONLY-NOT FOR BIDDING PURPOSES

BRIDGE NO. 08C-0377

| No. | REVISION: | BY: | DATE: |
|---|---|---|---|
| | | | |

These drawings are instruments of service provided by the Tehama County Public Works Dept. and are not to be used for any type of construction unless signed and sealed by a Registered Civil Engineer in the employ of the County of Tehama

TEHAMA COUNTY PUBLIC WORKS
9380 San Benito Ave.
Gerber, Ca 96035
(530) 385-1462

HORIZ: AS SHOWN
VERT:
SCALE
DRAWN BY: J. GREEN DATE: 11/01/2013
CHECKED BY: S. KOTAMALA DATE: 7/16/2013

99W AT THOMES CREEK BRIDGE
PROJECT (REPLACE)
STRUCTURE APPROACH DRAINAGE DETAILS

HDR
HDR Engineering, Inc.
2365 Iron Point Road, Suite 300 Folsom, CA 95630

REGISTERED CIVIL ENGINEER

REGISTERED PROFESSIONAL ENGINEER TITUS KENG No. 45226 Exp. 9-30-14 CIVIL STATE OF CALIFORNIA

PROJECT NO.: 14-370861

SHEET NO. S-20 PAGE NO. 39/47

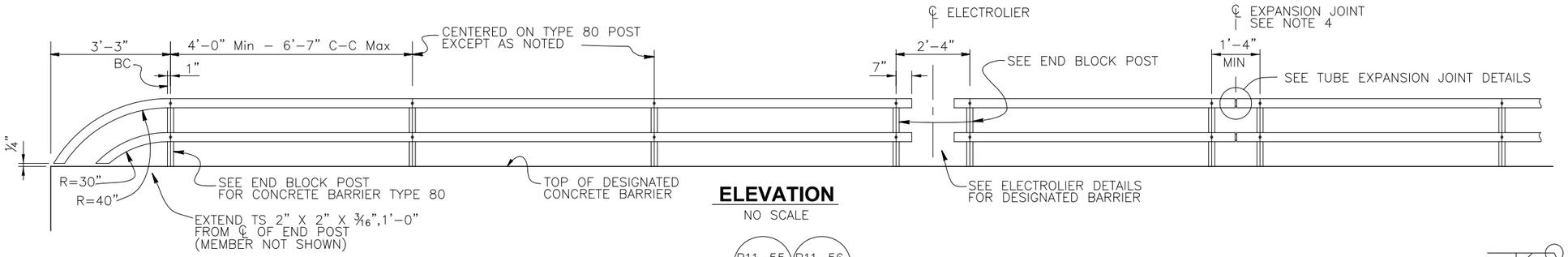


## ELEVATION
NO SCALE

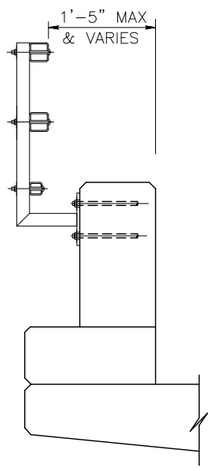


NOTE:
FOR DETAILS NOT SHOWN, SEE "TYPE 732 OR 736"

## TYPE 80 END BLOCK POST
SCALE: 1" = 1'-0"

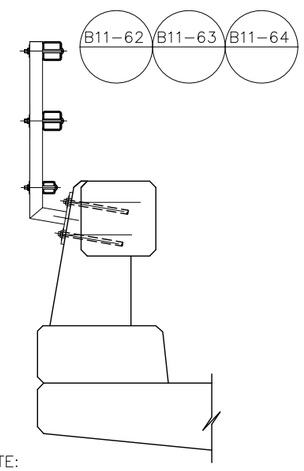


NOTE:
FOR DETAILS NOT SHOWN, SEE "TYPE 732 OR 736"

## TYPE 80
SCALE: 1" = 1'-0"

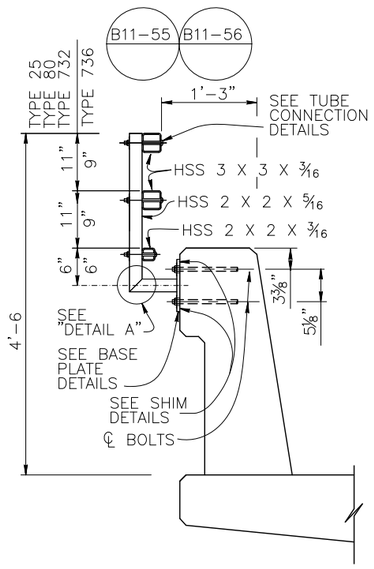


## TYPE 732 OR 736
SCALE: 1" = 1'-0"

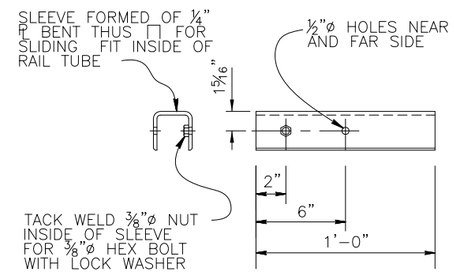


## SLEEVE DETAIL
NO SCALE

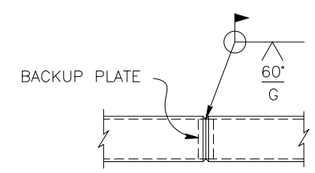


## WELDED SPLICE DETAIL
NO SCALE

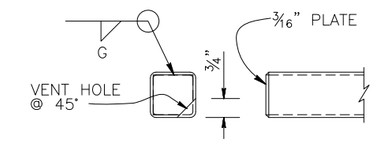


## RAIL CAP DETAIL
NO SCALE

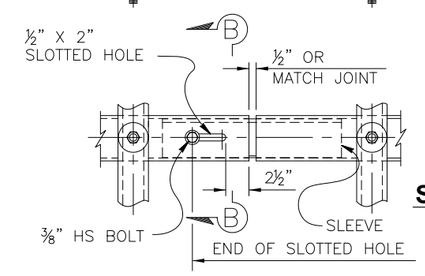

## SECTION B-B
NO SCALE

## TUBE EXPANSION JOINT DETAILS
NO SCALE

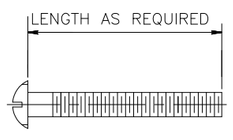


## ROUND HEAD SCREW DETAIL
NO SCALE

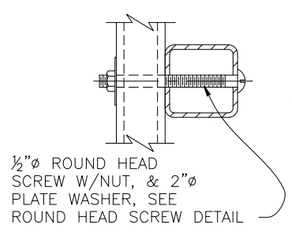


## TUBE CONNECTION DETAIL
NO SCALE

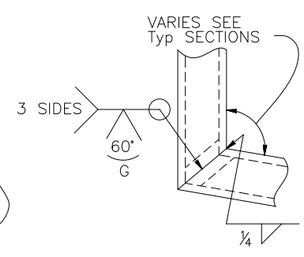


## DETAIL A
NO SCALE

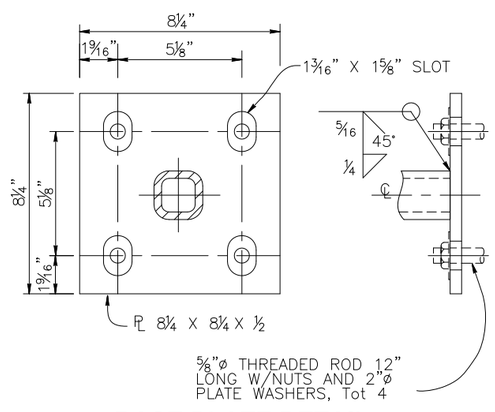


## BASE PLATE DETAIL
NO SCALE

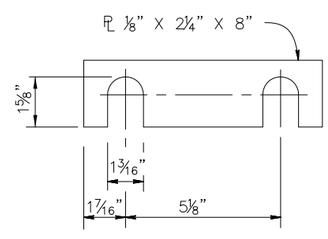


## SHIM DETAILS
NO SCALE

NOTES:

1. POST SHALL BE NORMAL TO RAILING.
2. RAIL TUBES SHALL BE SHOP BENT OR FABRICATED TO FIT HORIZONTAL CURVE WHEN RADIUS IS LESS THAN 12".
3. TUBE EXPANSION JOINTS SHALL BE LOCATED IN THE TUBES SPANNING DECK OR WALL JOINTS. INCREASE JOINT WIDTH IN TUBES TO MATCH EXPANSION JOINT WIDTH AND INCREASE SLEEVE LENGTH CORRESPONDINGLY.
4. TOP RAIL TUBE SHALL BE CONTINUOUS OVER NOT LESS THAN TWO POSTS EXCEPT A SHORT POST SPACING IS PERMITTED NEAR DECK OR WALL JOINTS, ELECTROLIERS, OR OTHER RAIL DISCONTINUITIES AS NOTED.
5. SEE PROJECT PLANS FOR LIMITS OF TUBULAR BICYCLE RAILING.

FOR REFERENCE ONLY--NOT FOR BIDDING PURPOSES

HDR
HDR Engineering, Inc.
2365 Iron Point Road, Suite 300 Folsom, CA 95630

REGISTERED CIVIL ENGINEER

REGISTERED PROFESSIONAL ENGINEER
TITUS KENG
No. 45226
Exp. 9-30-14
CIVIL
STATE OF CALIFORNIA

BRIDGE NO.
08C-0377

| No. | REVISION: | BY: | DATE: |
|---|---|---|---|
| | | | |

These drawings are instruments of service provided by the Tehama County Public Works Dept. and are not to be used for any type of construction unless signed and sealed by a Professional Engineer in the employ of the County of Tehama

TEHAMA COUNTY PUBLIC WORKS
9380 San Benito Ave.
Gerber, Ca. 96035
(530) 385-1462

COUNTY OF TEHAMA

| | |
|---|---|
| HORIZ: AS SHOWN | |
| VERT: | |
| SCALE | |
| DRAWN BY: J. GREEN | DATE: 11/01/2013 |
| CHECKED BY: S. KOTAMALA | DATE: 7/16/2013 |

99W AT THOMES CREEK BRIDGE
PROJECT (REPLACE)
TUBULAR BICYCLE RAILING DETAILS

PROJECT NO.: 14-370861

SHEET NO. S-21
PAGE NO. 40/47

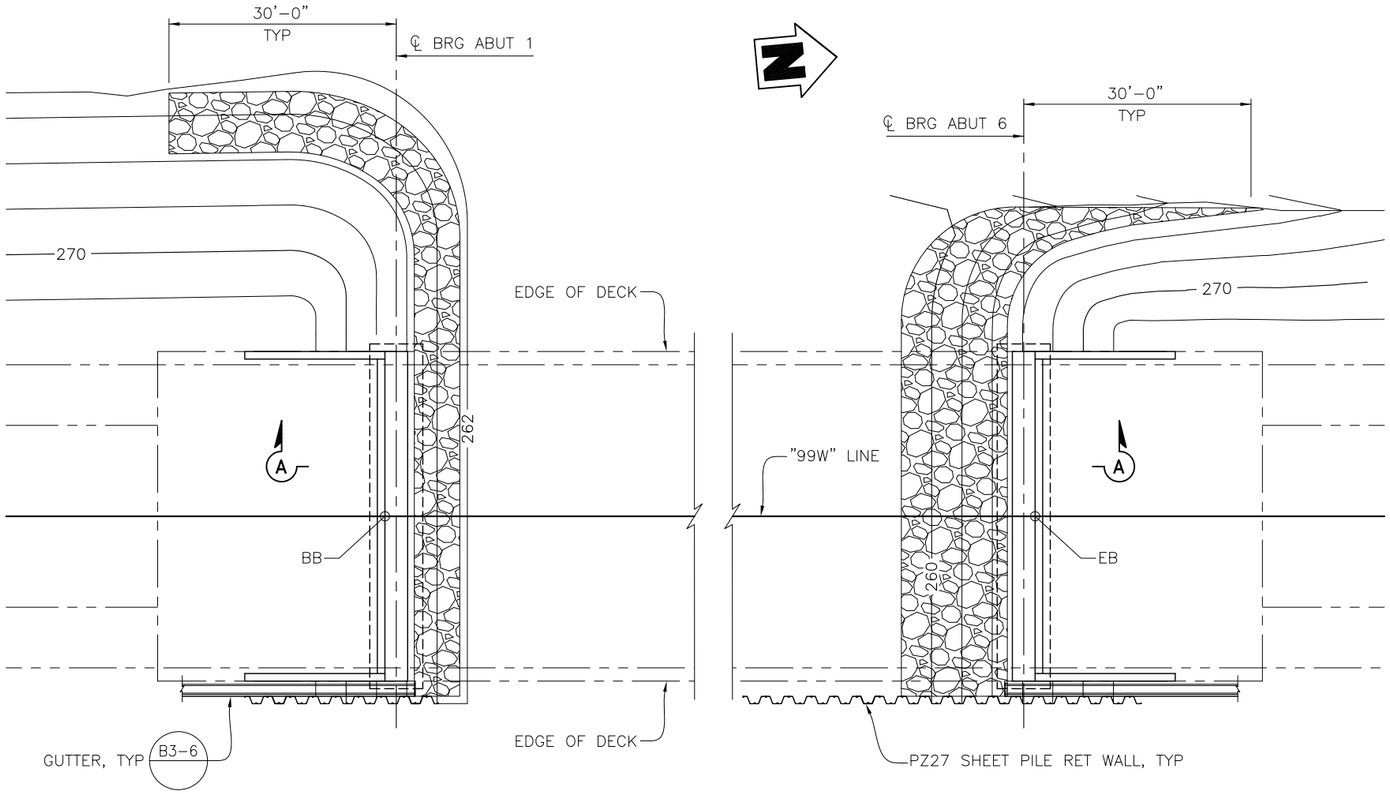


## PARTIAL PLAN

1" = 10'

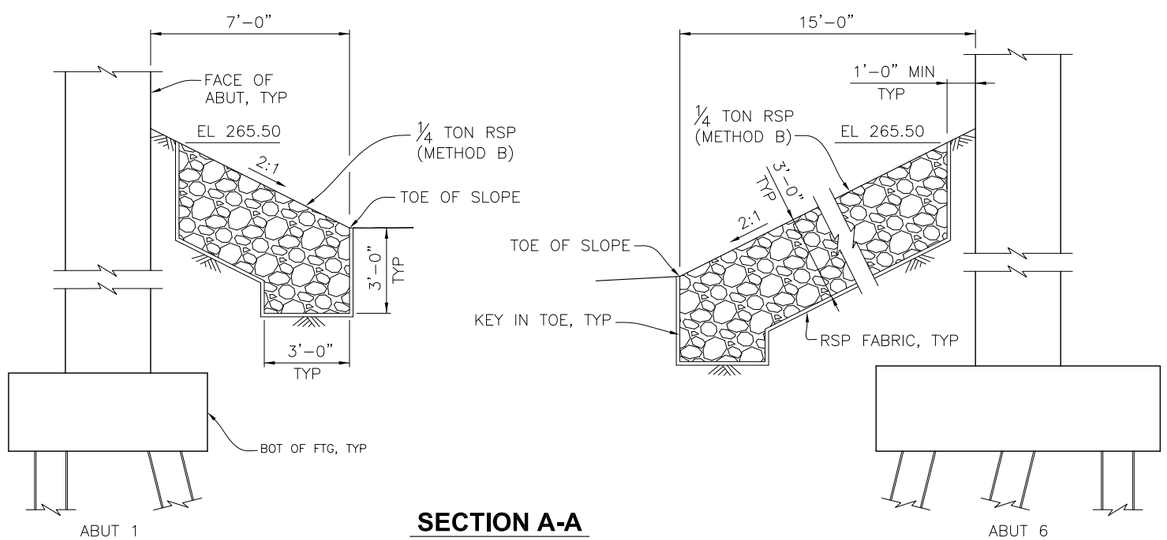


## SECTION A-A

NO SCALE

BRIDGE NO.
08C-0377

| No. | REVISION: | BY: | DATE: |
|---|---|---|---|
| | | | |

These drawings are instruments of service provided by the Tehama County Public Works Dept. and are not to be used for any type of construction unless signed and sealed by a Professional Engineer in the employ of the County of Tehama

TEHAMA COUNTY
PUBLIC WORKS

9380 San Benito Ave.
Gerber, Ca. 96035
(530) 385-1462

FOR REFERENCE ONLY-NOT FOR BIDDING PURPOSES

| SCALE | |
|---|---|
| HORIZ: AS SHOWN | |
| VERT: | |
| DRAWN BY: J. VOUGHT | DATE: 11/01/2013 |
| CHECKED BY: S. KOTAMALA | DATE: 7/16/2013 |

99W AT THOMES CREEK BRIDGE
PROJECT (REPLACE)
ROCK SLOPE PROTECTION DETAILS

PROJECT NO.: 14-370861

SHEET NO. S-22 | PAGE NO. 41/47

HDR

HDR Engineering, Inc.
2365 Iron Point Road, Suite 300 Folsom, CA 95630

REGISTERED CIVIL ENGINEER

REGISTERED PROFESSIONAL ENGINEER
TITUS KENG
No. 45226
Exp. 9-30-14
CIVIL
STATE OF CALIFORNIA

BRIDGE NO.
08C-0110

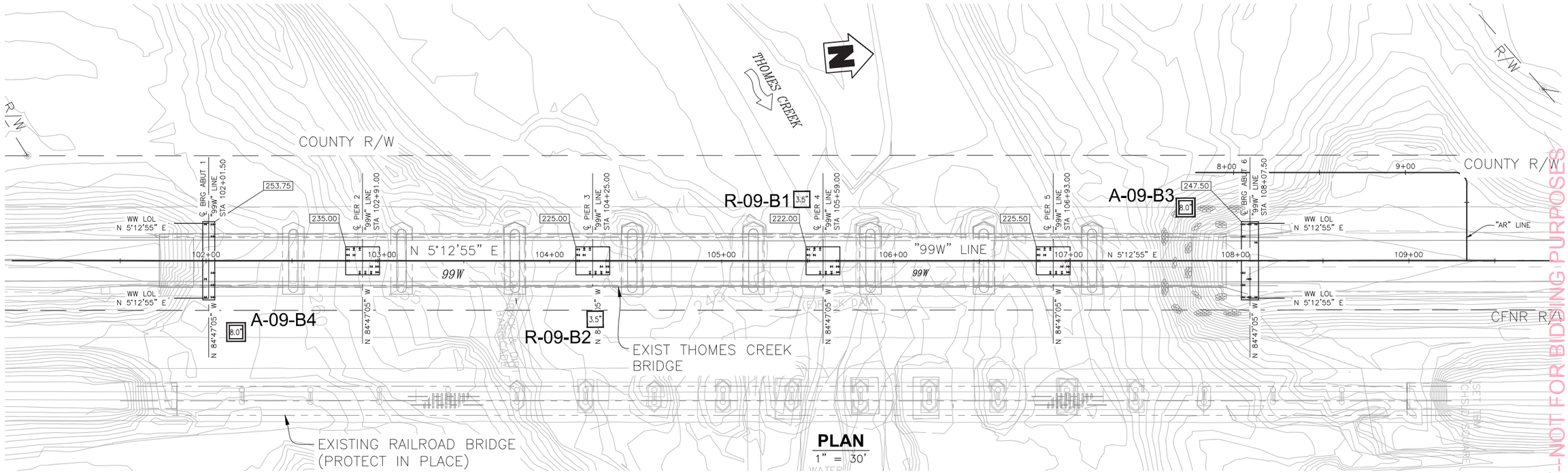


**PLAN**
1" = 30'

FOR REFERENCE ONLY-NOT FOR BIDDING PURPOSES

LEGEND:

- INDICATES BOTTOM OF FOOTING ELEVATION.
- INDICATES NEW STRUCTURE.
- INDICATES EXISTING FEATURES.
- INDICATES BATTERED HP PILE.
- INDICATES VERTICAL HP PILE.

NOTES:
1. Field classification of soils was in accordance with the Caltrans Soil & Rock Logging, Classification, and Presentation Manual (June 2007). See Log of Test Borings 4 and 5 of 6, "Soil Legend".
2. Standard Penetration tests were performed in accordance with ASTM D 1586–99 using a safety hammer operated with an cable–pulley system. Drill rods were 1 5/8–inch diameter "A"–rods; sampler was driven with brass liners.
3. "2.4 inch sampler": ID=2.4 inch, OD=2.9 inch. Driven in same manner as SPT ("1.4 inch") sampler.
4. The length of each sampled interval is shown graphically on the boring log. Whole number blow counts ("N") represent the "standard penetration resistance" interval in accordance with ASTM D1586–99. Where less than 1 foot of penetration is achieved, the blow count shown is for that fraction of the "standard penetration resistance" interval actually penetrated.
5. Consistency of soils shown in ( ) where estimated.
6. Groundwater surface elevations are subject to seasonal fluctuations and may occur at higher or lower elevations depending on the conditions at any particular time.
7. Boring elevations are estimated based on topography provided by Tehama County Department of Public Works.
8. Electronic media for plan view provided by HDR Engineering, Inc., General Plan, March 2014.
9. The "Log of Test Borings" drawing is included with plans in accordance with Section 2–1.03 of Caltrans "Standard Specifications".


blackburn consulting
**Blackburn Consulting**
**2491** Boatman Avenue, West Sacramento, CA 95691
File No. 1274.1


REGISTERED CIVIL ENGINEER

REGISTERED PROFESSIONAL ENGINEER
DAVID J. MORRELL
No. 60578
Exp. 12-31-14
CIVIL
STATE OF CALIFORNIA

| No. | REVISION: | BY: | DATE: |
|---|---|---|---|
| | | | |

These drawings are instruments of service provided by the Tehama County Public Works Dept. and are not to be used for any type of construction unless signed and sealed by a Registered Engineer in the employ of the County of Tehama


TEHAMA COUNTY
PUBLIC WORKS
9380 San Benito Ave.
Gerber, Ca. 96035
(530) 385-1462


COUNTY OF TEHAMA

| | |
|---|---|
| HORIZ: AS SHOWN | |
| VERT: AS SHOWN | |
| DRAWN BY: | M.D.R. |
| DATE: | 11/2009 |
| CHECKED BY: | D.J.M. |
| DATE: | 05/2013 |

SCALE

99W at THOMES CREEK BRIDGE
PROJECT ( REPLACE)
LOG OF TEST BORINGS 1 OF 6

PROJECT NO.: 370861

SHEET NO. S-23

PAGE NO. 42 / 47

# FOR PLAN VIEW AND BORING NOTES SEE LOG OF TEST BORINGS 1 of 6

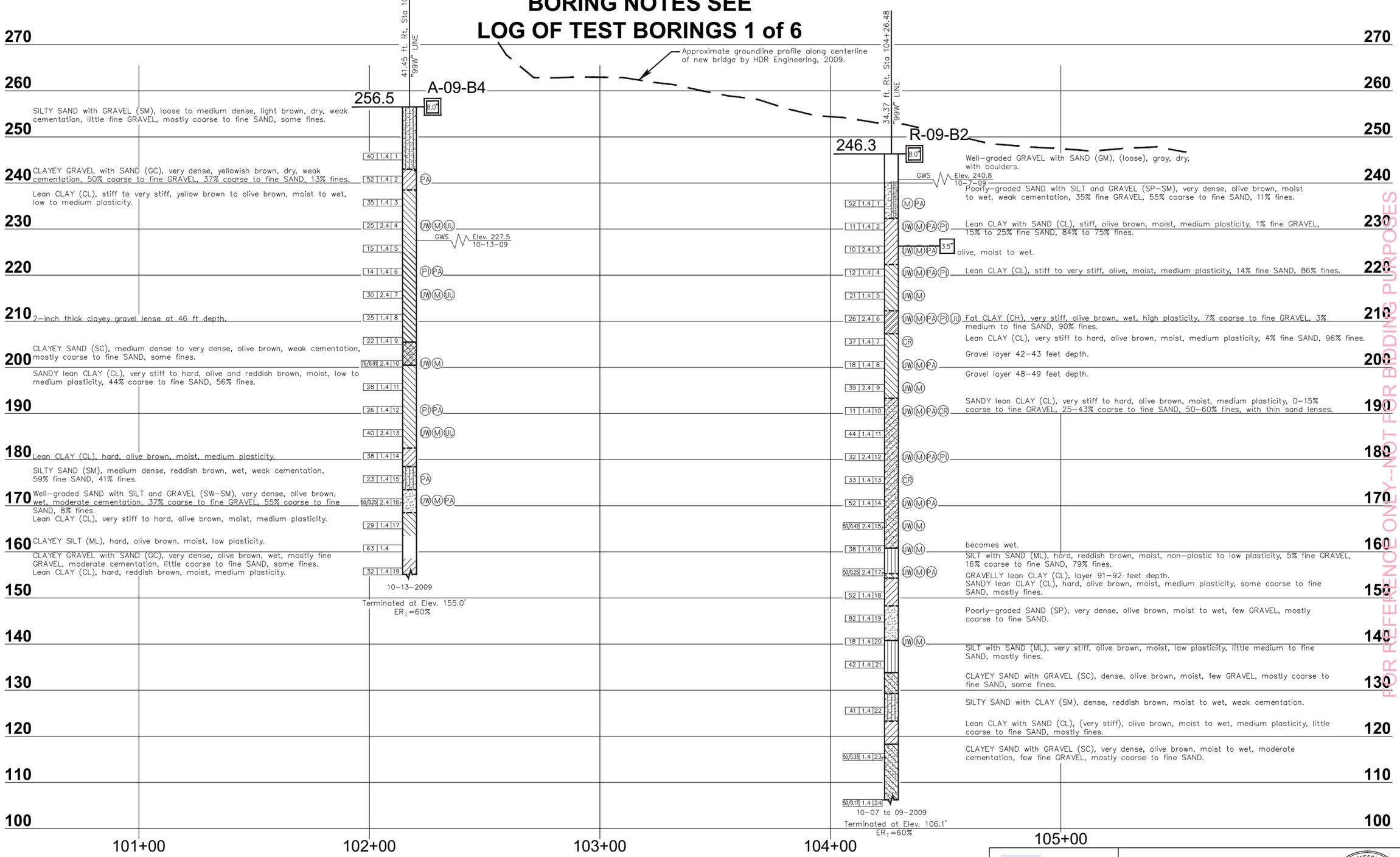


**PROFILE**

BRIDGE NO. 08C-0110

| No. | REVISION: | BY: | DATE: |
|---|---|---|---|
| | | | |

These drawings are instruments of service provided by the Tehama County Public Works Dept. and are to be used for any type of construction unless signed and sealed by a Registered Engineer in the employ of the County of Tehama

TEHAMA COUNTY PUBLIC WORKS

9380 San Benito Ave.
Gerber, Ca. 96035
(530) 385-1462

COUNTY OF TEHAMA

| SCALE | |
|---|---|
| HORIZ: | 1" = 20' |
| VERT: | 1" = 10' |
| DRAWN BY: | M.D.R. |
| DATE: | 11/2009 |
| CHECKED BY: | D.J.M. |
| DATE: | 05/2013 |

99W at THOMES CREEK BRIDGE
PROJECT (REPLACE)
LOG OF TEST BORINGS 2 OF 6

PROJECT NO.: 370861

| SHEET NO. | PAGE NO. |
|---|---|
| S-24 | 43 / 47 |

FOR REFERENCE ONLY--NOT FOR BIDDING PURPOSES

blackburn consulting
**Blackburn Consulting**
**2491** Boatman Avenue, West Sacramento, CA 95691
File No. 1274.1

REGISTERED CIVIL ENGINEER

REGISTERED PROFESSIONAL ENGINEER
DAVID J. MORRELL
No. 60578
Exp. 12-31-14
CIVIL
STATE OF CALIFORNIA

# FOR PLAN VIEW AND BORING NOTES SEE LOG OF TEST BORINGS 1 of 6

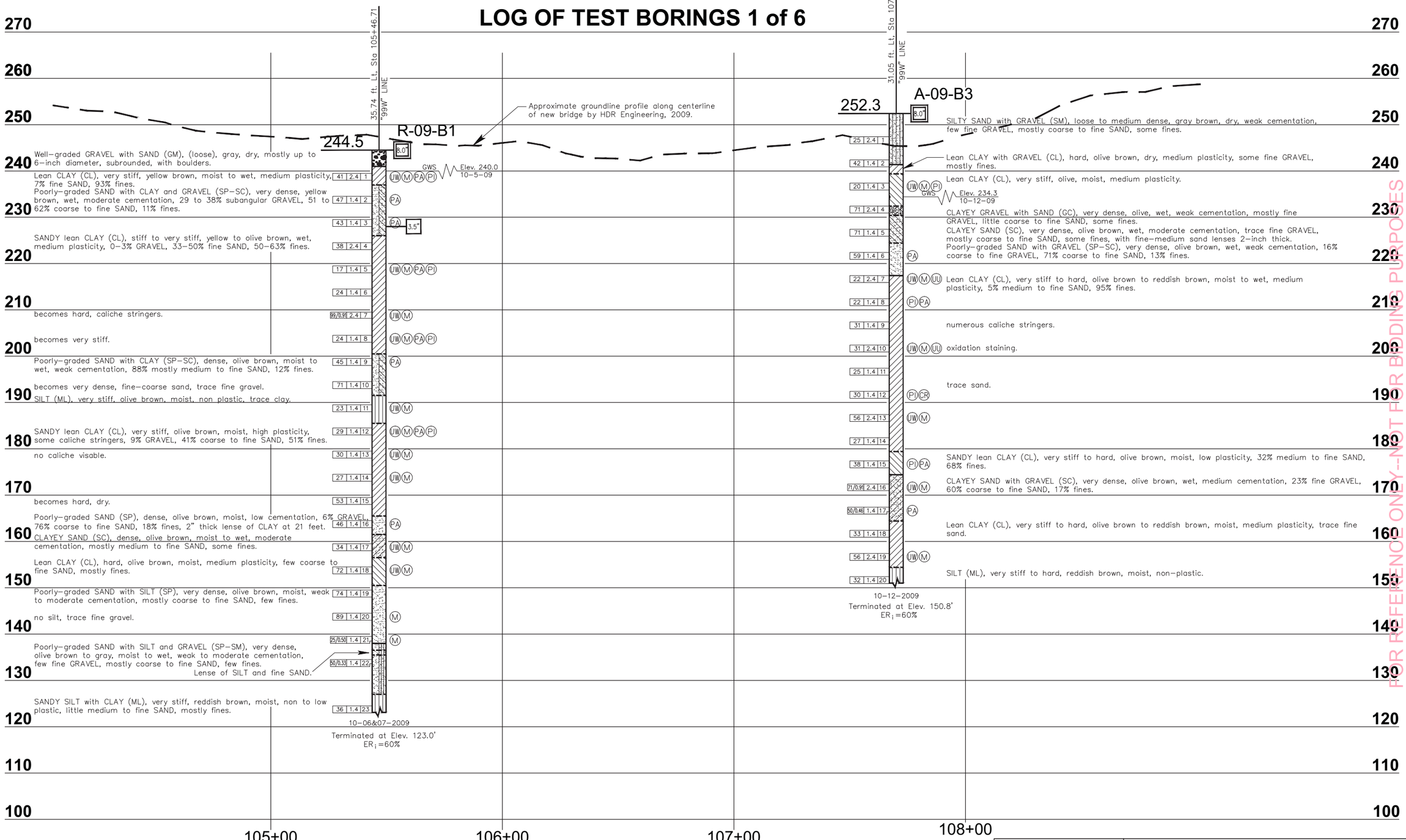


**PROFILE**

BRIDGE NO. 08C-0110

| No. | REVISION: | BY: | DATE: |
|---|---|---|---|

These drawings are instruments of service provided by the Tehama County Public Works Dept. and are not to be used for any type of construction unless signed and sealed by a Registered Civil Engineer in the employ of the County of Tehama

TEHAMA COUNTY PUBLIC WORKS
9380 San Benito Ave.
Gerber, Ca. 96035
(530) 385-1462

COUNTY OF TEHAMA

HORIZ: 1" = 20'
VERT: 1" = 10'
DRAWN BY: M.D.R.
DATE: 11/2009
CHECKED BY: D.J.M.
DATE: 05/2013

99W at THOMES CREEK BRIDGE PROJECT (REPLACE)
LOG OF TEST BORINGS 3 OF 6

PROJECT NO.: 370861

SHEET NO. S-25
PAGE NO. 44/47

blackburn consulting
Blackburn Consulting
2491 Boatman Avenue, West Sacramento, CA 95691
File No. 1274.1

REGISTERED CIVIL ENGINEER

REGISTERED PROFESSIONAL ENGINEER
DAVID J. MORRELL
No. 60578
Exp. 12-31-14
CIVIL
STATE OF CALIFORNIA

FOR REFERENCE ONLY--NOT FOR BIDDING PURPOSES

REFERENCE: CALTRANS SOIL & ROCK LOGGING, CLASSIFICATION, AND PRESENTATION MANUAL, (JUNE, 2007)

## CEMENTATION

| Description | Criteria |
|---|---|
| Weak | Crumbles or breaks with handling or little finger pressure. |
| Moderate | Crumbles or breaks with considerable finger pressure. |
| Strong | Will not crumble or break with finger pressure. |

## BOREHOLE IDENTIFICATION

| Symbol | Hole Type | Description |
|---|---|---|
| Size | A | Auger Boring |
| Size | R<br>P | Rotary drilled boring<br>Rotary percussion boring (air) |
| Size | R | Rotary drilled diamond core |
| Size | HD<br>HA | Hand driven (1–inch soil tube)<br>Hand Auger |
| ● | D | Dynamic Cone Penetration Boring |
| ▲ | CPT | Cone Penetration Test (ASTM D 5778) |
| ⬚ | O | Other |

NOTE: Size in inches.

## CONSISTENCY OF COHESIVE SOILS

| Description | Unconfined Compressive Strength (tsf) | Pocket Penetrometer Measurement (tsf) | Torvane Measurement (tsf) | Field Approximation |
|---|---|---|---|---|
| Very Soft | <0.25 | <0.25 | <0.12 | Easily penetrated several inches by fist |
| Soft | 0.25 to 0.50 | 0.25 to 0.50 | 0.12 to 0.25 | Easily penetrated several inches by thumb |
| Medium Stiff | 0.50 to 1.0 | 0.50 to 1.0 | 0.25 to 0.50 | Penetrated several inches by thumb with moderate effort |
| Stiff | 1 to 2 | 1 to 2 | 0.50 to 1.0 | Readily indented by thumb but penetrated only with great effort |
| Very Stiff | 2 to 4 | 2 to 4 | 1.0 to 2.0 | Readily indented by thumbnail |
| Hard | > 4.0 | > 4.0 | > 2.0 | Indented by thumbnail with difficulty |

## PLASTICITY OF FINE-GRAINED SOILS

| Description | Criteria |
|---|---|
| Nonplastic | A 1/8–inch thread cannot be rolled at any water content. |
| Low | The thread can barely be rolled and the lump cannot be formed when drier than the plastic limit. |
| Medium | The thread is easy to roll and not much time is required to reach the plastic limit. The thread cannot be rerolled after reaching the plastic limit. The lump crumbles when drier than the plastic limit. |
| High | It takes considerable time rolling and kneading to reach the plastic limit. The thread can be rerolled several times after reaching the plastic limit. The lump can be formed without crumbling when drier than the plastic limit. |

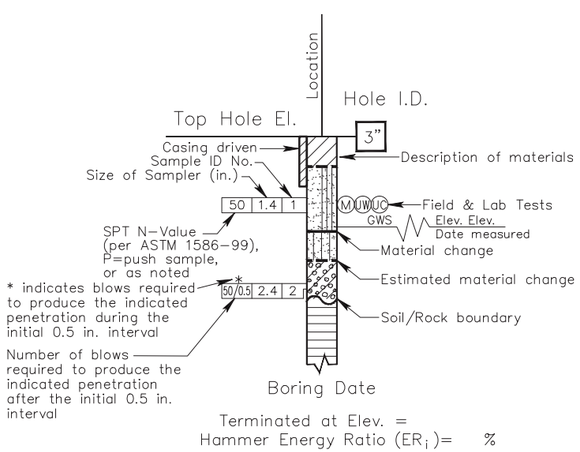


**ROTARY BORING**

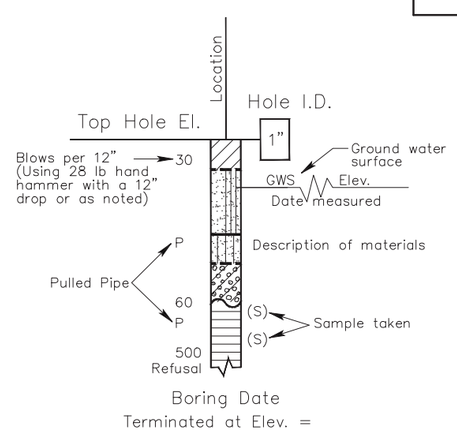


**HAND BORING**

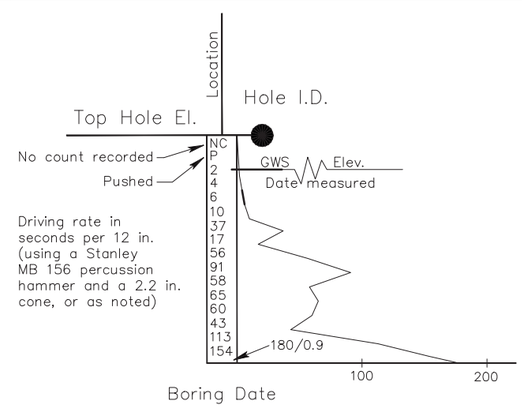


**DYNAMIC CONE PENETRATION BORING**

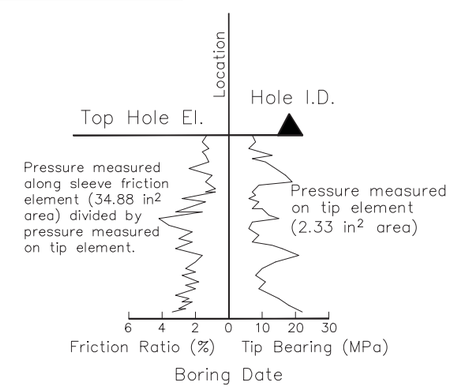


**CONE PENETRATION TEST (CPT) SOUNDING**

## SOIL LEGEND

blackburn consulting

**Blackburn Consulting**
**2491** Boatman Avenue, West Sacramento, CA 95691
File No. 1274.1

REGISTERED CIVIL ENGINEER

REGISTERED PROFESSIONAL ENGINEER
DAVID J. MORRELL
No. 60578
Exp. 12-31-14
CIVIL
STATE OF CALIFORNIA

BRIDGE NO.
08C–0110

| No. | REVISION: | BY: | DATE: |
|---|---|---|---|
| | | | |

These drawings are instruments of service provided by the Tehama County Public Works Dept. and are not to be used for any type of construction unless signed and sealed by a Professional Engineer in the employ of the County of Tehama

FOR REFERENCE ONLY–NOT FOR BIDDING PURPOSES

TEHAMA COUNTY PUBLIC WORKS
9380 San Benito Ave.
Gerber, Ca. 96035
(530) 385–1462

COUNTY OF TEHAMA

SCALE
HORIZ: NO SCALE
VERT: NO SCALE
DRAWN BY: M.D.R.
DATE: 11/2009
CHECKED BY: D.J.M.
DATE: 05/2013

99W at THOMES CREEK BRIDGE
PROJECT (REPLACE)
LOG OF TEST BORINGS 4 OF 6

PROJECT NO.: 370861

SHEET NO. S-26
PAGE NO. 45/47

REFERENCE: CALTRANS SOIL & ROCK LOGGING, CLASSIFICATION, AND PRESENTATION MANUAL, (JUNE, 2007)

## GROUP SYMBOLS AND NAMES

| Graphic/Symbol | Group Names |
|---|---|
| GW | Well-graded GRAVEL<br>Well-graded GRAVEL with SAND |
| GP | Poorly-graded GRAVEL<br>Poorly-graded GRAVEL with SAND |
| GW-GM | Well-graded GRAVEL with SILT<br>Well-graded GRAVEL with SILT and SAND |
| GW-GC | Well-graded GRAVEL with CLAY (or SILTY CLAY)<br>Well-graded GRAVEL with CLAY and SAND (or SILTY CLAY and SAND) |
| GP-GM | Poorly-graded GRAVEL with SILT<br>Poorly-graded GRAVEL with SILT and SAND |
| GP-GC | Poorly-graded GRAVEL with CLAY (or SILTY CLAY)<br>Poorly-graded GRAVEL with CLAY and SAND (or SILTY CLAY and SAND) |
| GM | SILTY GRAVEL<br>SILTY GRAVEL with SAND |
| GC | CLAYEY GRAVEL<br>CLAYEY GRAVEL with SAND |
| GC-GM | SILTY, CLAYEY GRAVEL<br>SILTY, CLAYEY GRAVEL with SAND |
| SW | Well-graded SAND<br>Well-graded SAND with GRAVEL |
| SP | Poorly-graded SAND<br>Poorly-graded SAND with GRAVEL |
| SW-SM | Well-graded SAND with SILT<br>Well-graded SAND with SILT and GRAVEL |
| SW-SC | Well-graded SAND with CLAY (or SILTY CLAY)<br>Well-graded SAND with CLAY and GRAVEL (or SILTY CLAY and GRAVEL) |
| SP-SM | Poorly-graded SAND with SILT<br>Poorly-graded SAND with SILT and GRAVEL |
| SP-SC | Poorly-graded SAND with CLAY (or SILTY CLAY)<br>Poorly-graded SAND with CLAY and GRAVEL (or SILTY CLAY and GRAVEL) |
| SM | SILTY SAND<br>SILTY SAND with GRAVEL |
| SC | CLAYEY SAND<br>CLAYEY SAND with GRAVEL |
| SC-SM | SILTY, CLAYEY SAND<br>SILTY, CLAYEY SAND with GRAVEL |
| PT | PEAT |
| | COBBLES<br>COBBLES and BOULDERS<br>BOULDERS |

| Graphic/Symbol | Group Names |
|---|---|
| CL | Lean CLAY<br>Lean CLAY with SAND<br>Lean CLAY with GRAVEL<br>SANDY lean CLAY<br>SANDY lean CLAY with GRAVEL<br>GRAVELLY lean CLAY<br>GRAVELLY lean CLAY with SAND |
| CL-ML | SILTY CLAY<br>SILTY CLAY with SAND<br>SILTY CLAY with GRAVEL<br>SANDY SILTY CLAY<br>SANDY SILTY CLAY with GRAVEL<br>GRAVELLY SILTY CLAY<br>GRAVELLY SILTY CLAY with SAND |
| ML | SILT<br>SILT with SAND<br>SILT with GRAVEL<br>SANDY SILT<br>SANDY SILT with GRAVEL<br>GRAVELLY SILT<br>GRAVELLY SILT with SAND |
| OL | ORGANIC lean Clay<br>ORGANIC lean Clay with SAND<br>ORGANIC lean Clay with GRAVEL<br>SANDY ORGANIC lean CLAY<br>SANDY ORGANIC lean CLAY with GRAVEL<br>GRAVELLY ORGANIC lean CLAY<br>GRAVELLY ORGANIC lean CLAY with SAND |
| OL | ORGANIC SILT<br>ORGANIC SILT with SAND<br>ORGANIC SILT with GRAVEL<br>SANDY ORGANIC SILT<br>SANDY ORGANIC SILT with GRAVEL<br>GRAVELLY ORGANIC SILT<br>GRAVELLY ORGANIC SILT with SAND |
| CH | Fat CLAY<br>Fat CLAY with SAND<br>Fat CLAY with GRAVEL<br>SANDY fat CLAY<br>SANDY fat CLAY with GRAVEL<br>GRAVELLY fat CLAY<br>GRAVELLY fat CLAY with SAND |
| MH | Elastic SILT<br>Elastic SILT with SAND<br>Elastic SILT with GRAVEL<br>SANDY elastic SILT<br>SANDY elastic SILT with GRAVEL<br>GRAVELLY elastic SILT<br>GRAVELLY elastic SILT with SAND |
| OH | ORGANIC fat CLAY<br>ORGANIC fat CLAY with SAND<br>ORGANIC fat CLAY with GRAVEL<br>SANDY ORGANIC fat CLAY<br>SANDY ORGANIC fat CLAY with GRAVEL<br>GRAVELLY ORGANIC fat CLAY<br>GRAVELLY ORGANIC fat CLAY with SAND |
| OH | ORGANIC elastic SILT<br>ORGANIC elastic SILT with SAND<br>ORGANIC elastic SILT with GRAVEL<br>SANDY ORGANIC elastic SILT<br>SANDY ORGANIC elastic SILT with GRAVEL<br>GRAVELLY ORGANIC elastic SILT<br>GRAVELLY ORGANIC elastic SILT with SAND |
| OH/OL | ORGANIC SOIL<br>ORGANIC SOIL with SAND<br>ORGANIC SOIL with GRAVEL<br>SANDY ORGANIC SOIL<br>SANDY ORGANIC SOIL with GRAVEL<br>GRAVELLY ORGANIC SOIL<br>GRAVELLY ORGANIC SOIL with SAND |

## FIELD AND LABORATORY TESTING

- (C) Consolidation (ASTM D 2435)
- (CL) Collapse Potential (ASTM D 5333)
- (CP) Compaction Curve (CTM 216)
- (CR) Corrosivity Testing (CTM 643, CTM 422, CTM 417)
- (CU) Consolidated Undrained Triaxial (ASTM D 4767)
- (DS) Direct Shear (ASTM D 3080)
- (EI) Expansion Index (ASTM D 4829)
- (M) Moisture Content (ASTM D 2216)
- (OC) Organic Content-% (ASTM D 2974)
- (P) Permeability (CTM 220)
- (PA) Particle Size Analysis (ASTM D 422)
- (PI) Plasticity Index (AASHTO T 90) Liquid Limit (AASHTO T 89)
- (PL) Point Load Index (ASTM D 5731)
- (PM) Pressure Meter
- (PP) Pocket Penetrometer
- (R) R-Value (CTM 301)
- (SE) Sand Equivalent (CTM 217)
- (SG) Specific Gravity (AASHTO T 100)
- (SL) Shrinkage Limit (ASTM D 427)
- (SW) Swell Potential (ASTM D 4546)
- (TV) Pocket Torvane
- (UC) Unconfined Compression-Soil (ASTM D 2166) Unconfined Compression-Rock (ASTM D 2938)
- (UU) Unconsolidated Undrained Triaxial (ASTM D 2850)
- (UW) Unit Weight (ASTM D 2937)
- (VS) Vane Shear (AASHTO T 223)

## APPARENT DENSITY OF COHESIONLESS SOILS

| Description | SPT $N_{60}$-Value (Blows / 12 inches) |
|---|---|
| Very Loose | 0 - 4 |
| Loose | 5 - 10 |
| Medium Dense | 11 - 30 |
| Dense | 31 - 50 |
| Very Dense | > 50 |

## MOISTURE

| Description | Criteria |
|---|---|
| Dry | Absence of moisture, dusty, dry to the touch |
| Moist | Damp but no visible water |
| Wet | Visible free water, usually soil is below water table |

## PERCENT OR PROPORTION OF SOILS

| Description | Criteria |
|---|---|
| Trace | Particles are present but estimated to be less than 5% |
| Few | 5 to 10% |
| Little | 15 to 25% |
| Some | 30 to 45% |
| Mostly | 50 to 100% |

## PARTICLE SIZE

| Description | | Size |
|---|---|---|
| Boulder | | > 12" |
| Cobble | | 3" to 12" |
| Gravel | Coarse | 3/4" to 3" |
| | Fine | No. 4 to 3/4" |
| Sand | Coarse | No. 10 to No. 4 |
| | Medium | No. 40 to No. 10 |
| | Fine | No. 200 to No. 40 |

# SOIL LEGEND


blackburn consulting
Blackburn Consulting
2491 Boatman Avenue, West Sacramento, CA 95691
File No. 1274.1


REGISTERED CIVIL ENGINEER

REGISTERED PROFESSIONAL ENGINEER DAVID J. MORRELL No. 60578 Exp. 12-31-14 CIVIL STATE OF CALIFORNIA

FOR REFERENCE ONLY--NOT FOR BIDDING PURPOSES

BRIDGE NO. 08C-0110

| No. | REVISION: | BY: | DATE: |
|---|---|---|---|
| | | | |

These drawings are instruments of service provided by the Tehama County Public Works Dept. and are not to be used for any type of construction unless signed and sealed by a Registered Civil Engineer in the employ of the County of Tehama


TEHAMA COUNTY PUBLIC WORKS
9380 San Benito Ave.
Gerber, Ca. 96035
(530) 385-1462


SCALE: HORIZ: NO SCALE; VERT: NO SCALE
DRAWN BY: M.D.R. DATE: 11/2009
CHECKED BY: D.J.M. DATE: 05/2013

99W at THOMES CREEK BRIDGE
PROJECT (REPLACE)
LOG OF TEST BORINGS 5 OF 6

PROJECT NO.: 370861

| District | County | Route | Section | Phase |
|---|---|---|---|---|
| 03 | Teh | 7 | A | 14 21 |

Approved
March 6, 1950

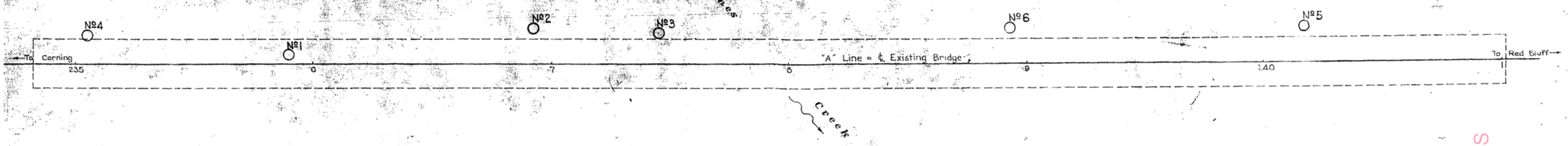


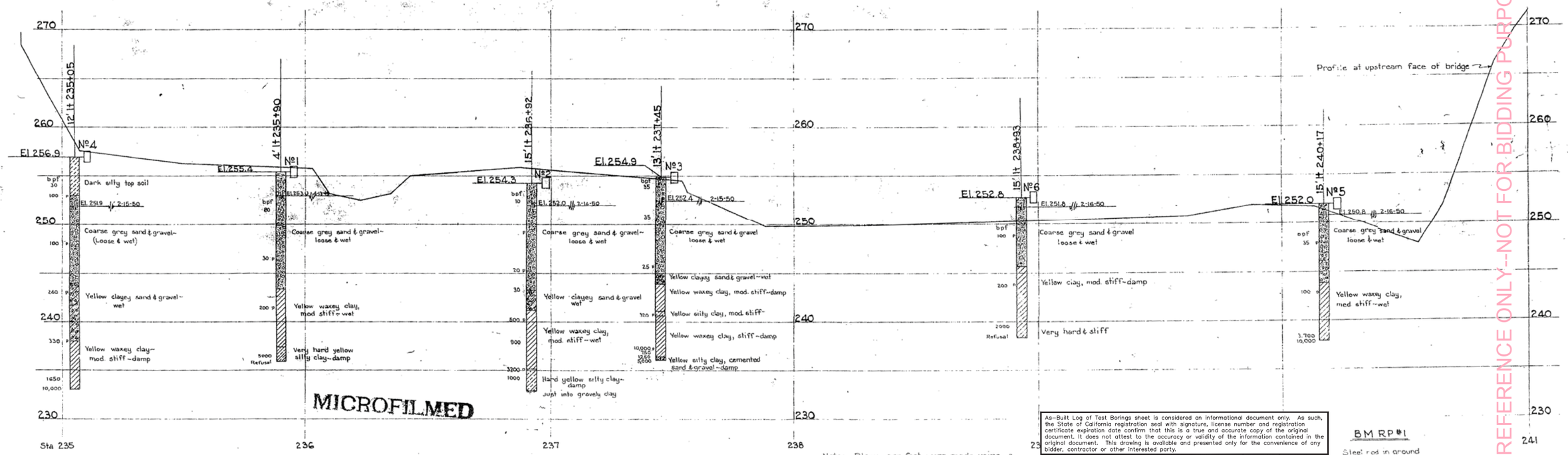


MICROFILMED

Note: Blows per foot were made using a 28 lb hand hammer with a 12" drop

BM RP#1
Steel rod in ground
56.35' rt sta 241+75
Elev 258.47

As-Built Log of Test Borings sheet is considered an informational document only. As such, the State of California registration seal with signature, license number and registration certificate expiration date confirm that this is a true and accurate copy of the original document. It does not attest to the accuracy or validity of the information contained in the original document. This drawing is available and presented only for the convenience of any bidder, contractor or other interested party.

| DIST. | COUNTY | ROUTE | POST MILES–TOTAL PROJECT | SHEET NO. | TOTAL SHEETS |
|---|---|---|---|---|---|
| 03 | Teh | 99 (Old) | | – | – |

REGISTERED ENGINEERING GEOLOGIST DATE

## 99W at THOMES CREEK BRIDGE, PROJECT (REPLACE)
## LOG OF TEST BORINGS 6 OF 6

NOTE: A COPY OF THIS LOG OF TEST BORINGS IS AVAILABLE AT OFFICE OF STRUCTURE MAINTENANCE AND INVESTIGATIONS, SACRAMENTO, CALIFORNIA.

CU:
EA:
BRIDGE NO. 08C-0377

SHEET NO. S-28 PAGE NO. 47/47

Revisions made to this Log of Test Borings from the original 1963 Log of Test Borings are the addition of the following table and notes.

| Boring | Station | Offset from "99W" LINE |
|---|---|---|
| No. 1 | 102+31.42 | 03.54 ft Lt |
| No. 2 | 103+83.79 | 14.38 ft Lt |
| No. 3 | 104+36.81 | 12.42 ft Lt |
| No. 4 | 101+97.23 | 11.87 ft Lt |
| No. 5 | 107+07.21 | 14.66 ft Lt |
| No. 6 | 105+83.98 | 14.27 ft Lt |

REGISTERED PROFESSIONAL ENGINEER
DAVID J. MORRELL
No. 60578
Exp 12/31/14
CIVIL
STATE OF CALIFORNIA

### NOTES

[illegible] SUBJECT TO SECTION [illegible] ARTICLE [illegible] OF [illegible] SPECIFICATIONS AND TO THE SPECIAL PROVISIONS [illegible] CONTRACT [illegible] ATION OF EARTH MATERIAL AS SHOWN ON THIS SHEET [illegible] BASED [illegible] AND IS NOT TO BE CONSTRUED TO IMPLY MECHANICAL [illegible]

AS BUILT (No corrections)
CORRECTIONS BY [illegible]
DATE: 2-5-51

### CLASSIFICATION OF MATERIAL BASED ON STANDARD GRADE SIZE LIMITS

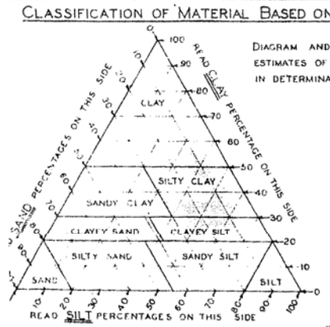


DIAGRAM AND TABLE SHOWING THE BASIS FOR ESTIMATES OF GRADE SIZE DISTRIBUTION USED IN DETERMINATION OF CLASS NAMES.

| GROUPING USED IN TRIANGULAR CLASSIFICATION | | | |
|---|---|---|---|
| CLASS NAME | PERCENTAGE OF SIZES PRESENT | | |
| | SAND | SILT | CLAY |
| SAND | 80-100 | 0-20 | 0-20 |
| SILTY SAND | 45-80 | 0-55 | 0-20 |
| SANDY SILT | 0-45 | 35-80 | 0-20 |
| SILT | 0-20 | 80-100 | 0-20 |
| CLAYEY SAND | 30-80 | 0-42 | 20-30 |
| CLAYEY SILT | 0-38 | 32-80 | 20-30 |
| SANDY CLAY | 30-70 | 0-40 | 30-50 |
| SILTY CLAY | 0-30 | 20-70 | 30-50 |
| CLAY | 0-30 | 0-30 | 50-100 |

* GRAVEL IS PRESENT IN APPRECIABLE AMOUNTS THE TERM "GRAVELLY" MAY BE ADDED TO THE CLASS NAME, AS "GRAVELLY SAND". THE TERMS "COARSE," "MEDIUM" AND "FINE" WHEN USED TO DESCRIBE GRAVEL, SAND AND SILT REFER TO STANDARD GRADE SIZE LIMITS.

### LEGEND OF BORING OPERATIONS

- PLAN OF ANY BORING
- 1" SAMPLER BORING
- ROTARY WASH BORING
- 1" CLOSED SAMPLER DRIVEN
- CORE BORING
- 2½" PENETROMETER DRIVEN
- 2" SAMPLER BORING
- 2" TO 5" AUGER BORING
- 6" TO 20" AUGER BORING
- CASING DRIVEN
- JET BORING
- (S) SAMPLE TAKEN

THE APPROPRIATE BORING SYMBOLS DESIGNATING THE METHOD OF OPERATION ARE SHOWN AT THE UPPER RIGHT-HAND CORNER OF THE RESPECTIVE BORING. WHERE TOOL CHANGES WERE MADE DURING THE BORING OPERATION SYMBOLS ARE SHOWN AT THE POINT OF CHANGE.

### LEGEND OF EARTH MATERIALS

- GRAVEL – G
- SAND – S
- SILT – SI
- CLAY – C
- SILTY SAND – SI S
- CLAYEY SAND – C S
- SANDY SILT – S SI
- CLAYEY SILT – C SI
- SANDY CLAY – SC
- SILTY CLAY – SI C
- PEAT AND ORGANIC CLAY – O
- SANDSTONE – SS
- SHALE – SH
- BROKEN ROCK (FRAGMENTS) – BR
- ROCK – R

THOMES CREEK
LOG OF TEST BORINGS
Horizontal: 1" = 20'
Vertical: 1" = 5'
8-40 08C 0110

FOR REFERENCE ONLY--NOT FOR BIDDING PURPOSES