California Department of Transportation
Division of Maintenance

Structure Maintenance and Investigations

BRIDGE

INSPECTION

RECORDS

INFORMATION

SYSTEM

The requested documents have been generated by BIRIS.

These documents are the property of the California Department of Transportation and should be handled in accordance with Deputy Directive 55 and the State Administrative Manual.

Records for “Confidential” bridges may only be released outside the Department of Transportation upon execution of a confidentiality agreement.

Bids Opened 4-19-50
Contract 51-2TC4

Bridge ~~6m4C~~ 8C-110 THOMES CREEK (WIDENING) II-Teh-~~3[illegible]~~ 8 B2

TYPE---------- R.C. Arches on R.C. Piers & Abutments
Steel H Piles under widened footings.

SPANS---------- 9 at various (58' to 66') TOTAL LENGTH 619.25'

ROADWAY---------- Widened (7') to 28' SKEW NONE

DESIGN LOADING----- H15-44 (for widening) ON TANGENT

REMARKS---------- Contract includes 20.4 miles widening highway; widening bridges at McClure & Elder Creeks
Total of 11 bids; averaged 3 low.

BRIDGE WIDENING COST			LOW	AVERAGE
TOTAL COST BRIDGE WORK ONLY 619.25 x 7 = 4335 sq.ft.			$22.57	$22.24
QUANTITIES AND UNIT BID PRICES				
Remove Concrete----------	44	c.y. at	$21.00	$17.00
Remove & Reset Br. Rail----------	620	l.f. at	2.00	2.667
Struct. Excavation-Type "A"------	1,040	c.y. at	9.00	8.433
Asph. Paint Binder-Pr.Ct.(Br.Surf.)--	2	tons at	35.00	36.333
Paving Asphalt (P.M.S.)----------	15	tons at	22.00	21.00
Min. Aggregate (P.M.S.)----------	310	tons at	2.45	2.2627
Class "A" P.C.C.(Struct)----------	885	c.y. at	59.00	56.00
Class "A" P.C.C. (Ftg. Blocks)-----	220	c.y. at	30.00	36.333
Misc. Steel----------	280	lbs. at	0.31	0.337
Furnish Steel Piling----------	2,310	l.f. at	3.45	3.227
Drive Piles----------	152	ea. at	53.00	54.18
Steel Pile Splices----------	15	ea. at	25.00	24.033
Bar Reinforcing Steel----------	120,000	lbs. at	0.082	0.0867
Total Cost Bridge Items only			$97,825.80	$96,395.39
Temporary Timber Rail----------	620	l.f. at	$ 4.00	$ 3.187
Portable Timber Barricades----------	20	ea. at	46.00	36.00
Metal Plate Guard Rail----------	126	l.f. at	3.25	3.50

TOTAL CONTRACT BID

LOW BID	$380,573.80	McGillivray Constr. Co.
AVERAGE BID	$393,061.59	Sacramento

ClibPDF - www.fastio.com

FED. ROAD DIV. NO.	STATE	PROJ. NO.	FISCAL YEAR	SHEET NO.	TOTAL SHEETS
7	CAL.				

DIST.	COUNTY	ROUTE	SECTION	SHEET NO.	TOTAL SHEETS
11	Teh	7	A	13	21

05

BRIDGE ENGINEER — CIVIL AND STRUCTURAL ENGINEER—LICENSE DATE

DATE APPROVED March 6, 1950

G.T. McCOY

CIVIL ENGINEER — LICENSE DATE

By Fred Greene
Deputy State Highway Engineer

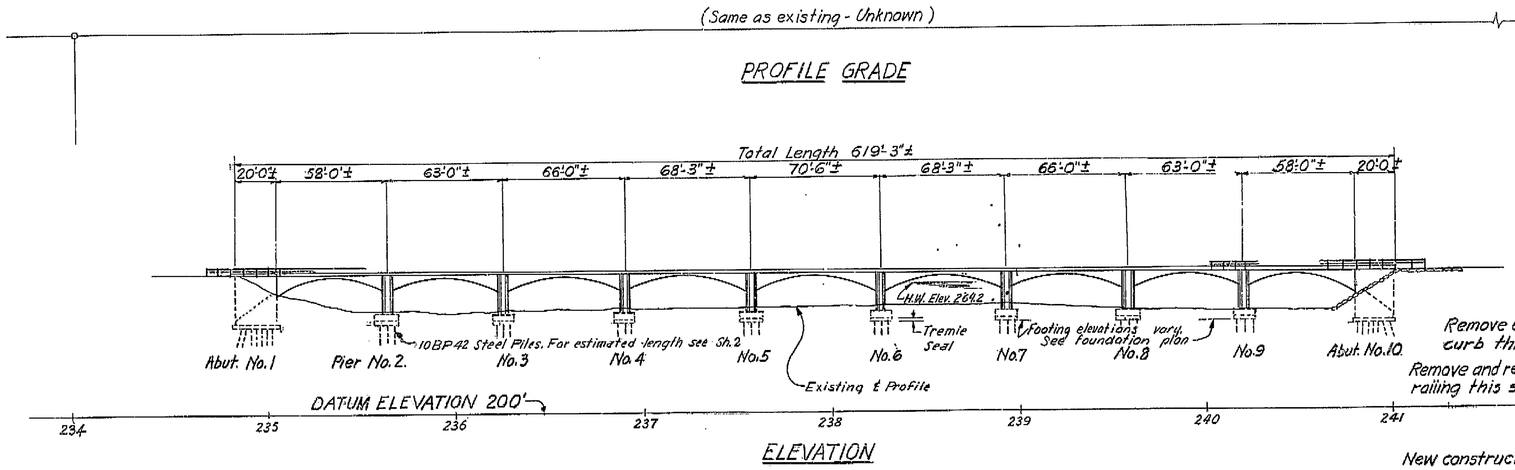

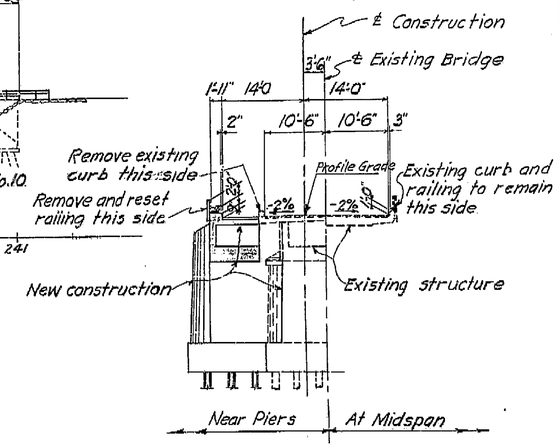

TYPICAL SECTION
Scale 1" = 10'

AS BUILT PLANS
Contract No.
Date Completed
Document No. 2

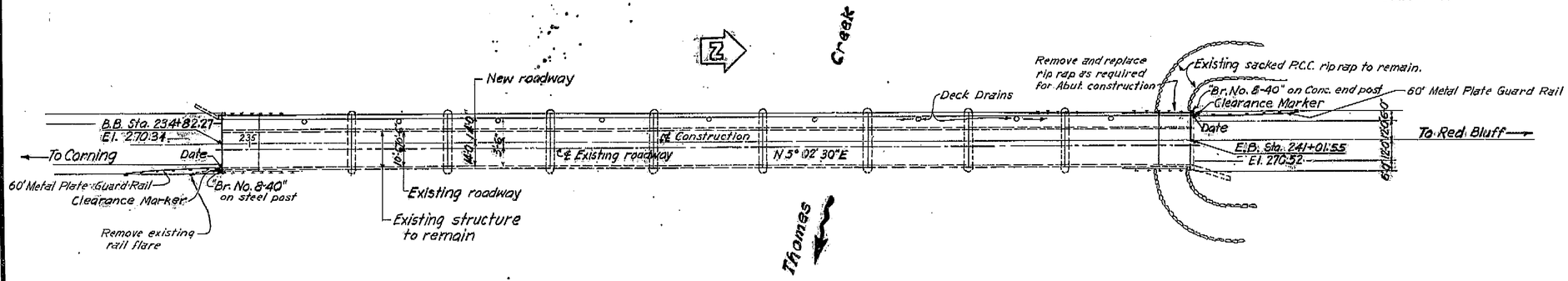

PLAN

County Br.

Co. Br. 8C-110

See Sheet No.15 for General Notes.

Live Loading for widening H15-44

STATE OF CALIFORNIA
DEPARTMENT OF PUBLIC WORKS
DIVISION OF HIGHWAYS

WIDENING OF BRIDGE ACROSS THOMES CREEK
LOCATED 33 MILES NORTH OF CORNING IN TEHEMA COUNTY

GENERAL PLAN

Except as noted SCALE 1" = 30' | BRIDGE 8C-110 | DRAWING C-442-53

BRIDGE DEPARTMENT

Submitted by: [signature]

DESIGN	By [signature]	Chk.	GDG 3-50
DETAILS	By [signature]	Chk.	GDG 3-50
QUANTITIES	By RSS 3-50	Chk.	GDG 3-50
SPECIFICATIONS	By	Chk.	
Approval Recommended by	[signature]	Date	1950

I HEREBY CERTIFY THAT THIS IS A TRUE AND ACCURATE COPY OF THE ABOVE DOCUMENT TAKEN UNDER MY DIRECTION AND CONTROL ON THIS DATE IN SACRAMENTO, CALIFORNIA PURSUANT TO AUTHORIZATION BY THE DIRECTOR OF PUBLIC WORKS.

DATE 11-2-71 SIGNATURE [signature] TITLE

ClibPDF - www.fastio.com

F.A.U. ROUTE OR STATE ROUTE NO.	STATE	PROJECT NO.	FISCAL YEAR	SHEET NO.	TOTAL SHEETS
7	CAL.				

DIST.	COUNTY	ROUTE	SECTION	SHEET NO.	TOTAL SHEETS
11	Teh	7	A	15	21

BRIDGE ENGINEER — CIVIL AND STRUCTURAL ENGINEER—LICENSE 5918

DATE APPROVED March 6, 1950

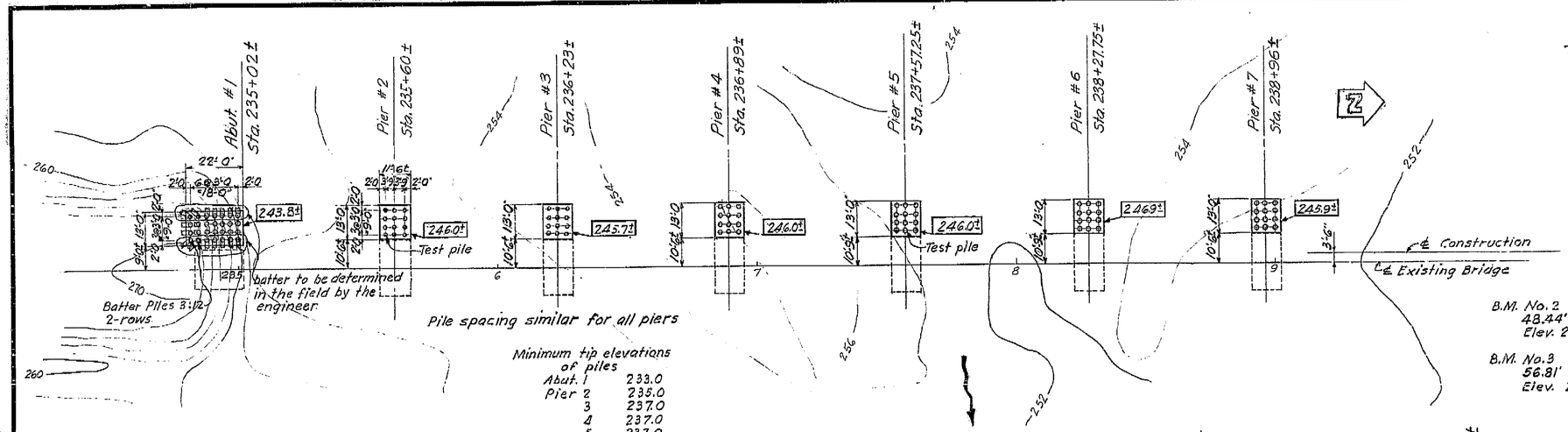

Minimum tip elevations of piles

Abut. 1	233.0
Pier 2	235.0
3	237.0
4	237.0
5	237.0
6	238.0
7	238.0
8	238.0
9	238.0
Abut. 10	238.0

For estimating purposes only
average length of piles = 15'
length of test piles = 25'

B.M. No. 2 Steel Rod
48.44' Rt. Sta. 233+70
Elev. 260.897

B.M. No. 3 Steel Rod
56.81' Lt. Sta. 233+70
Elev. 259.949

FOUNDATION PLAN

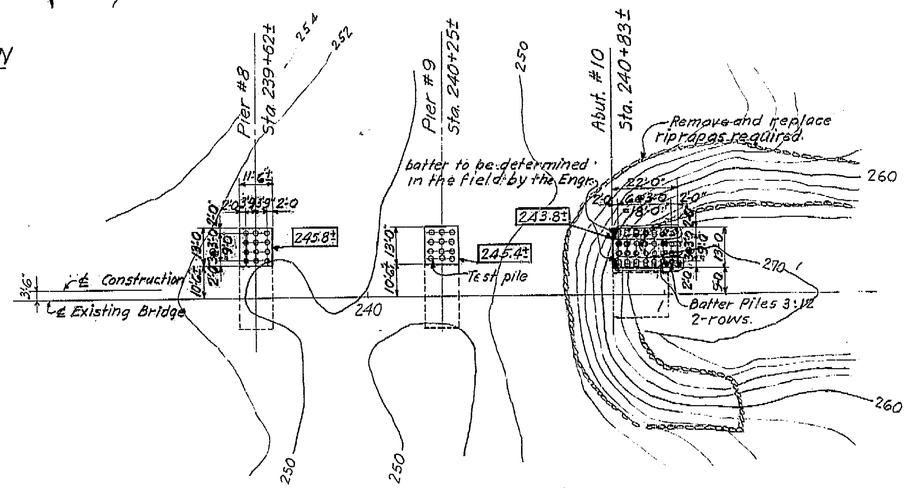

GENERAL NOTES

Specifications:

Design: A.A.S.H.O. dated 1949 with subsequent revisions, and Bridge Department Supplement dated 1949.

Construction: Standard Specifications, Division of Highways dated January 1949. and the Special Provisions.

Live Loading: H15-44

Unit Stresses: fs = 20000 p.s.i.; fc = 1000 p.s.i.; n = 10 except:
Arch Rib: fs = 20000 p.s.i.; fc = 1500 p.s.i.; n = 8

Pile Loading: 32 tons. 10".B.P. 42 Steel Piles

Reinforcement: Embedment is clear to outside of bar; and is 2" to main reinforcement, except as noted. Hooks shall conform to the Manual of Standard Practice, A.C.I. Backing for hooks is four diameters, except as noted. Bar areas are based on rounds for less than 1" and squares for over 1".
Bars in thick slabs having more than 12" of concrete under the bars shall be lapped 35 diameters, and all others lapped 20 diameters, to make the splice.

All dimensions dependent upon existing structure shall be verified in the field by the Contractor.

Bottom of footing elevations shown thus ▭
See Sht. No. 16 for pile splice.

AS BUILT PLANS
Contract No.
Date Completed
Document No. 2

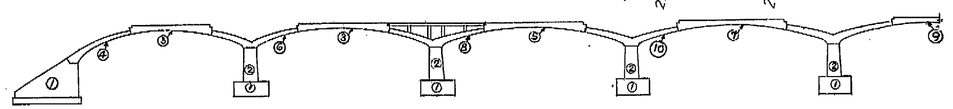

POURING DIAGRAM

Concrete pours of arch rib to be made in order shown on diagram. The contractor may submit an alternate pouring diagram for approval of the engineer. Sections at springing are not to be placed for at least 24 hours after pouring the center of the next adjacent span (5) to be poured 24 hours before (6). Diaphragms and deck may be poured after arch has set for at least seven days and before centering has been struck.

8C-110

	By	Date	Checked
Submitted by	[illegible]	4-26	
Drawn	[illegible]	3-26	
Traced	[illegible]	3-26	
Quantities	[illegible]	3-26	
Checked	[illegible]	3-26	
Approved Recommended by	[illegible]		

STATE OF CALIFORNIA
DEPARTMENT OF PUBLIC WORKS
DIVISION OF HIGHWAYS

WIDENING OF BRIDGE ACROSS THOMES CREEK

FOUNDATION PLAN

SCALE 1" = 20' | BRIDGE 8-40 | FILE | DRAWING C-442-55

I HEREBY CERTIFY THAT THIS IS A TRUE AND ACCURATE COPY OF THE ABOVE DOCUMENT TAKEN UNDER MY DIRECTION AND CONTROL ON THIS DATE IN SACRAMENTO, CALIFORNIA PURSUANT TO AUTHORIZATION BY THE DIRECTOR OF PUBLIC WORKS.

DATE 12-2-71 SIGNATURE [signature] TITLE Sr. Rmo

BRIDGE DEPARTMENT

MICROFILM - STATE OF CALIFORNIA - DEPARTMENT OF PUBLIC WORKS - MICROFILM

ClibPDF - www.fastio.com

DIST.	COUNTY	ROUTE	POST MILE	SHEET NO.	TOTAL SHEETS
II	Teh	7	A	14	21

March 6, 1950

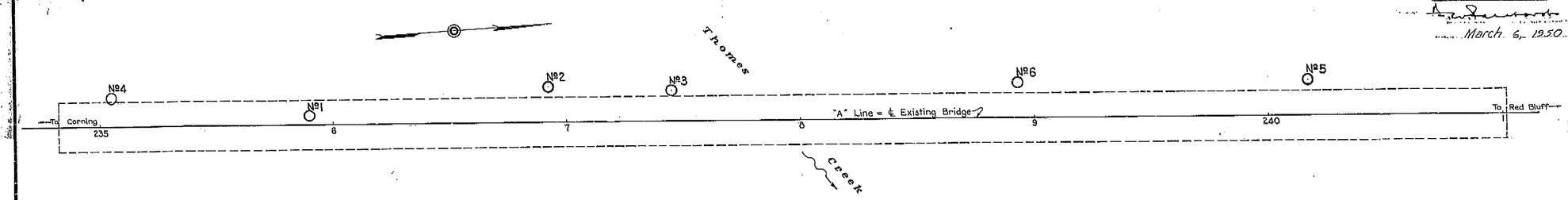

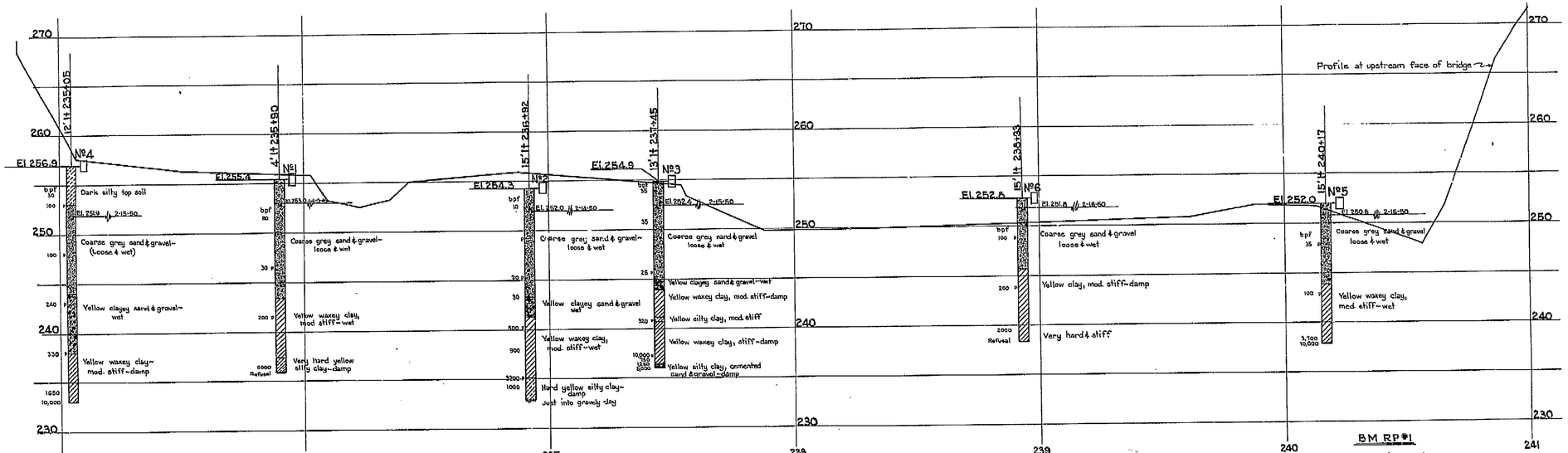

Note: Blows per foot were made using a 28 lb hand hammer with a 12" drop.

Classification of Material Based on Standard Grade Size Limits

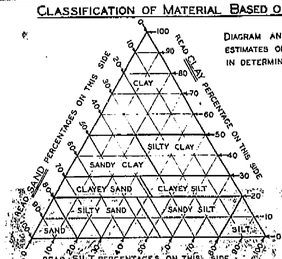

Diagram and table showing the basis for estimates of grade size distribution used in determination of class names.

Grouping Used in Triangular Classification			
Class Name	Percentage of Sizes Present		
	Sand	Silt	Clay
SAND	60-100	0-20	0-20
SILTY SAND	45-80	0-55	0-20
SANDY SILT	0-45	35-80	0-20
SILT	0-20	80-100	0-20
CLAYEY SAND	35-80	0-42	20-35
CLAYEY SILT	0-35	32-80	20-50
SANDY CLAY	30-70	0-40	30-50
SILTY CLAY	0-30	20-70	30-50
CLAY	0-50	0-50	50-100

If gravel is present in appreciable amounts, the term "gravelly" may be added to the class name, viz. "gravelly sand". The terms "coarse", "medium" and "fine" when used to describe gravel, sand and silt refer to Standard Grade Size Limits.

Legend of Boring Operations

- Plan of any boring
- 1" Sampler boring
- Rotary wash boring
- 1" Closed sampler driven
- Core boring
- 2½" Penetrometer driven
- 2" Sampler boring
- 2"-10½" Auger boring
- 6"-20" Auger boring
- Casing driven
- Jet boring
- (S) Sample taken

The appropriate boring symbols designating the method of operation are shown at the upper right-hand corner of the respective boring. Where tool changes were made during the boring operation symbols are shown at the point of change.

Legend of Earth Materials

- Gravel— G
- Sand— S
- Silt— Si
- Clay— C
- Silty Sand— Si S
- Clayey Sand— C S
- Sandy Silt— S Si
- Clayey Silt— C Si
- Sandy Clay— S C
- Silty Clay— Si C
- Peat and/or Organic Clay— O
- Sandstone— SS
- Shale— Sh
- Broken Rock (Fragments)— Br
- Rock— R

Abbreviations

El. 69.4	Elevation of ground at test hole
b p f	Blows per foot—(see note above)
P	Pulled pipe
M	Moisture as % dry weight
El. 64.3 ∇ 5-3-49	Elevation of ground water and date

Notes

The contractor's attention is directed to Section 2, Article (c) of the Standard Specifications and to the Special Provisions accompanying this set of plans.

Classification of earth material as shown on this sheet is based upon field inspection and is not to be construed to imply mechanical analysis.

AS BUILT PLANS
Contract No.
Date Completed
Document No. 2

THOMES CREEK
LOG OF TEST BORINGS
Horizontal: 1"=20'
Vertical: 1"=5'
ENGINEERING
DRAWING NO. C 442-54

BRIDGE DEPARTMENT

J.O.D. 3-50

Chief Bridge Engineer

I HEREBY CERTIFY THAT THIS IS A TRUE AND ACCURATE COPY OF THE ABOVE DOCUMENT TAKEN UNDER MY DIRECTION AND CONTROL ON THIS DATE IN SACRAMENTO, CALIFORNIA PURSUANT TO AUTHORIZATION BY THE DIRECTOR OF PUBLIC WORKS.

DATE 12-2-71 SIGNATURE [signature] TITLE SR. RMC.

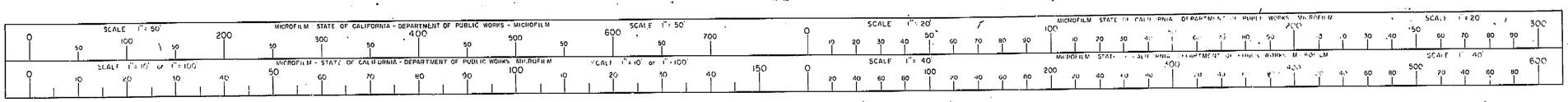

ClibPDF - www.fastio.com

FED. ROAD DIV. NO.	STATE	PROJ. NO.	FISCAL YEAR	SHEET NO.	TOTAL SHEETS
7	CAL.				

DIST.	COUNTY	ROUTE	SECTION	SHEET NO.	TOTAL SHEETS
11	Teh	7	A	20	21

DATE APPROVED: March 6, 1950

BRIDGE DEPARTMENT

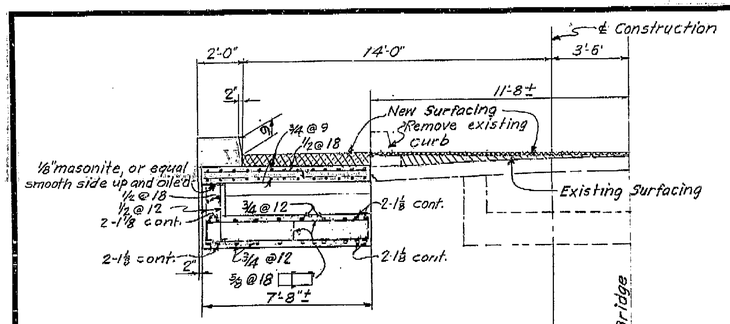

SECTION H-H

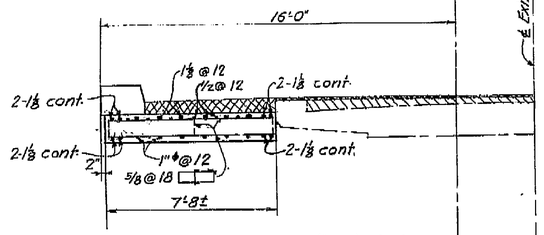

SECTION J-J

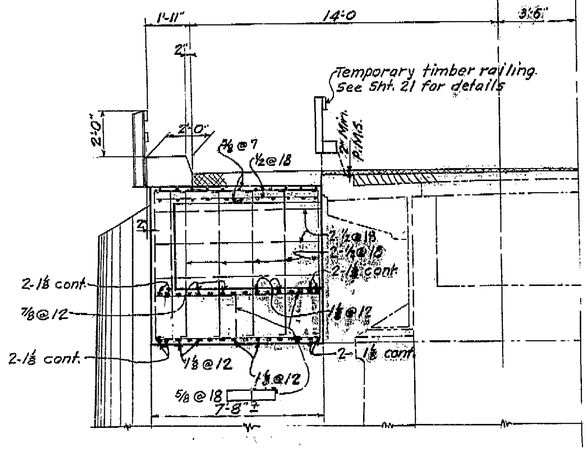

SECTION K-K

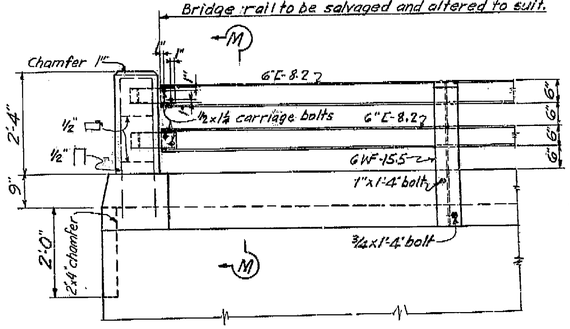

ELEVATION L-L

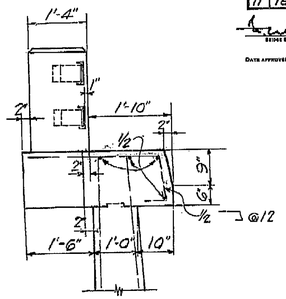

SECTION M-M

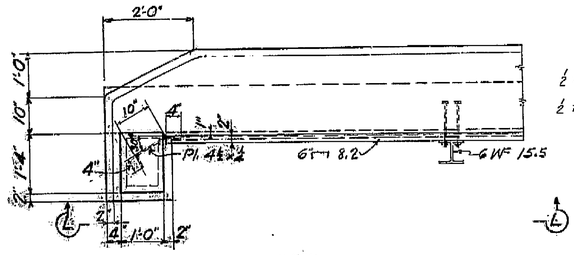

PART PLAN
CURB RETURN ABUTMENT 10
Scale 3/4"=1'-0

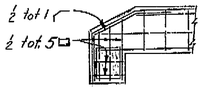

CURB RETURN REINFORCEMENT
Scale 3/8"=1'-0"

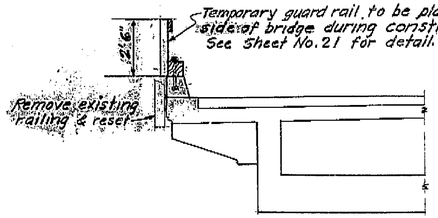

TEMPORARY GUARD RAIL
No Scale

AS BUILT PLANS
Contract No.
Date Completed
Document No. 2

8C-110

Submitted by Wakefield — Dec. 3-49
DESIGN — Dec. 3-49
DETAILS — Dec. 3-49
QUANTITIES — Dec. 3-49
SPECIFICATIONS — Dec. 3-49
Approved for submission by Bridge Engineer — Jan. 1950

STATE OF CALIFORNIA
DEPARTMENT OF PUBLIC WORKS
DIVISION OF HIGHWAYS

WIDENING OF BRIDGE ACROSS THOMES CREEK

DETAILS NO. 2

Excess materials from this bridge SCALE 1"=10' BRIDGE 8C-110 FILE DRAWING C-442-60

For location of Section H-H see Sht. 17.
For location of Sections J-J & K-K see Sht. 18.

POST DRAWING NO. 8-12-52

I HEREBY CERTIFY THAT THIS IS A TRUE AND ACCURATE COPY OF THE ABOVE DOCUMENT TAKEN UNDER MY DIRECTION AND CONTROL ON THIS DATE IN SACRAMENTO, CALIFORNIA PURSUANT TO AUTHORIZATION BY THE DIRECTOR OF PUBLIC WORKS.

DATE _____ SIGNATURE _____ TITLE _____

MICROFILM - STATE OF CALIFORNIA - DEPARTMENT OF PUBLIC WORKS - MICROFILM
SCALE 1"=50' SCALE 1"=20' SCALE 1"=10' or 1"=100' SCALE 1"=40'

ClibPDF - www.fastio.com

DIST.	COUNTY	ROUTE	SECTION	SHEET NO.	TOTAL SHEETS
11	Teh.	7	A	16	21

DISTR. ENGINEER — CIVIL AND STRUCTURAL ENGINEER — ACCESS 1410

DATE APPROVED: March 6, 1950

BRIDGE DEPARTMENT

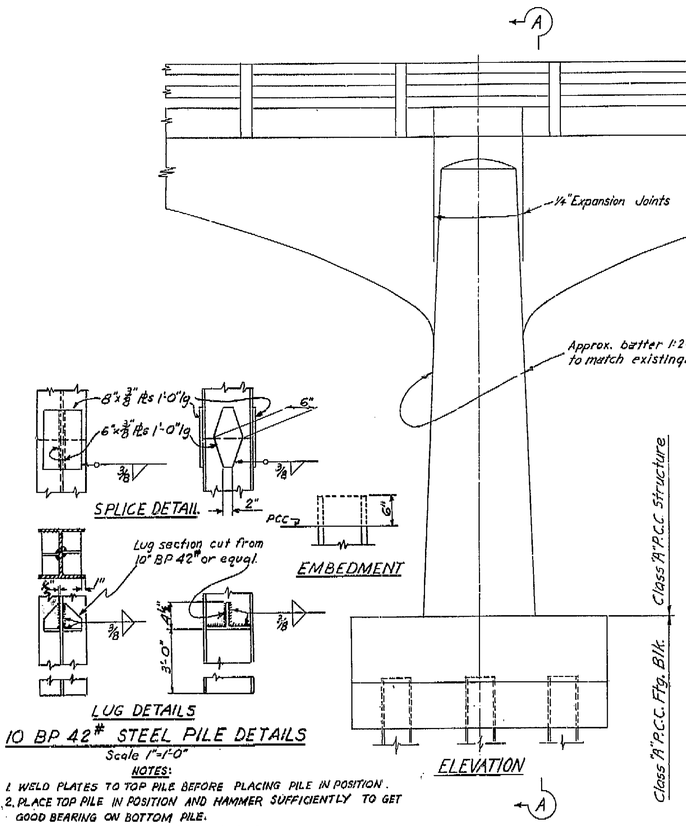

10 BP 42# STEEL PILE DETAILS

Scale 1"=1'-0"

NOTES:

1. WELD PLATES TO TOP PILE BEFORE PLACING PILE IN POSITION.
2. PLACE TOP PILE IN POSITION AND HAMMER SUFFICIENTLY TO GET GOOD BEARING ON BOTTOM PILE.
3. WELD SPLICE PLATES TO BOTTOM PILE.
4. BUTT WELD ANY OPENING REMAINING BETWEEN PILES.
5. ALL PILES TO BE FLAME CUT USING A STEEL YOKE TO SECURE A SQUARE AND EVEN CUT.
6. LUG TO BE USED WHEN ORDERED BY THE ENGINEER.

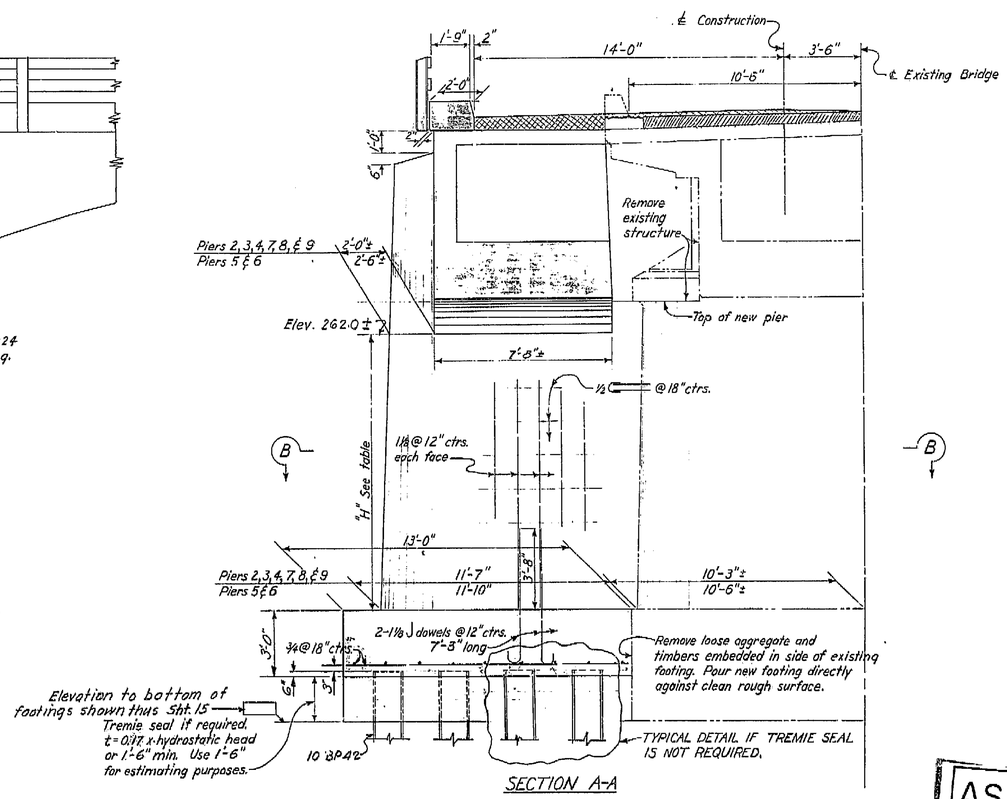

SECTION A-A

Pier	"H"
2	11.5±
3	11.8±
4	11.5±
5	11.5±
6	10.6±
7	11.6±
8	11.7±
9	12.1±

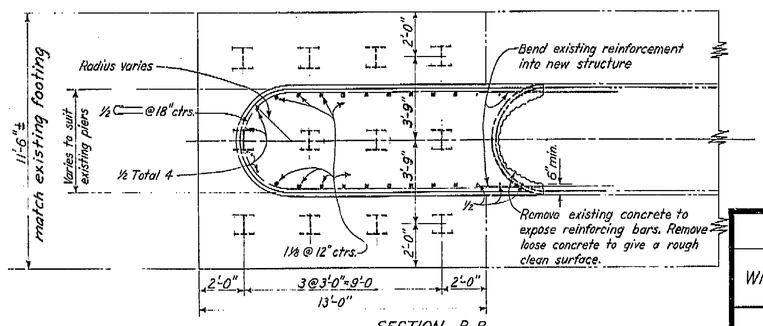

SECTION B-B

AS BUILT PLANS
Contract No.
Date Completed
Document No. 2

8C-110

STATE OF CALIFORNIA
DEPARTMENT OF PUBLIC WORKS
DIVISION OF HIGHWAYS

WIDENING OF BRIDGE ACROSS THOMES CREEK

PIER DETAILS

SCALE ⅜"=1'-0" | BRIDGE 8-110 | FILE | DRAWING C-442-56

POST-DRAWING NO. 11-112

	DESIGN	DETAILS	QUANTITIES	SPECIFICATIONS
Submitted by	W.W.H. 2-20	C.H.C. 2-20	C.H.C. 2-20	J.B.P. 2-20
Checked by	W.W.H. 2-20	C.H.C. 2-20	C.H.C. 2-20	J.B.P. 2-20
Approved	R. K. 3-20	R. K. 3-20	R. K. 3-20	R. K. 3-20

Approved Subsidiary Plan Numbers: Specifications 14756

I HEREBY CERTIFY THAT THIS IS A TRUE AND ACCURATE COPY OF THE ABOVE DOCUMENT TAKEN UNDER MY DIRECTION AND CONTROL ON THIS DATE IN SACRAMENTO, CALIFORNIA PURSUANT TO AUTHORIZATION BY THE DIRECTOR OF PUBLIC WORKS.

DATE 12-2-71 SIGNATURE [illegible] TITLE [illegible]

MICROFILM – STATE OF CALIFORNIA – DEPARTMENT OF PUBLIC WORKS – MICROFILM

ClibPDF - www.fastio.com

DIST.	COUNTY	ROUTE	SECTION	SHEET NO.	TOTAL SHEETS
II	Teh.	7	A, B	21	21

Engineer

APPROVED March 6, 1950

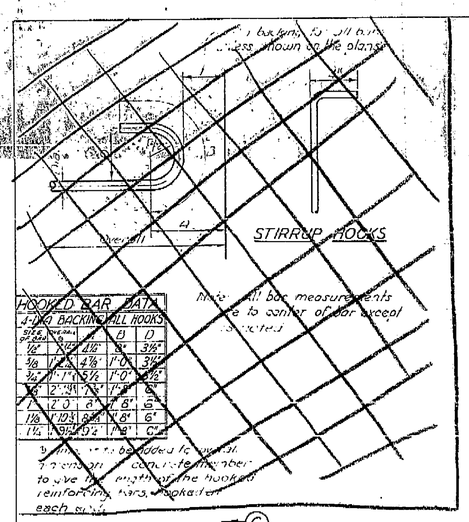

HOOKED BAR DATA				
#3 RD. BACKING	ALL HOOKS			
Bar No.	A	B	C	D
2	4"	4½"	6"	3½"
3	4"	4½"	1'-0"	3½"
4	4"	5½"	1'-0"	4½"
5	5"	5½"	1'-0"	4½"
6	1'-0"	6"	1'-6"	5"
7	1'-0"	6"	1'-6"	6"
8	1'-0"	6½"	1'-6"	6"
9	1'-0"	7½"	1'-6"	6½"

Bars may be bodded to obtain the required cross-sectional area of any main reinforcing bars, spaced at each end.

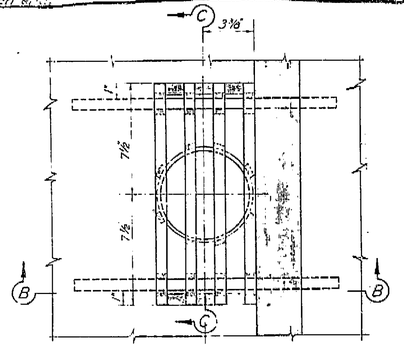

PLAN

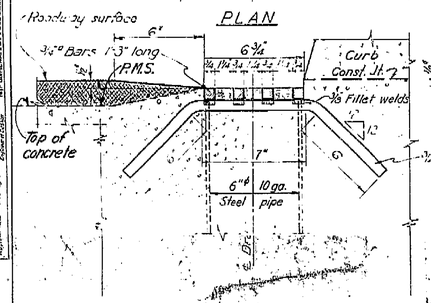

SECTION (B)-(B)

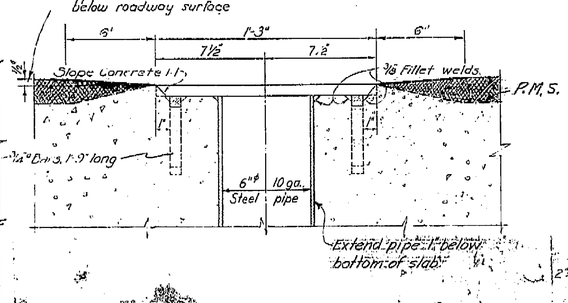

SECTION (C)-(C)

DRAIN DETAIL - TYPE A

Total of 29 Required: Elder Cr. 13, McClure Cr. 5, Thames Cr. 9

Note: Drain to be galvanized after all welding is completed.

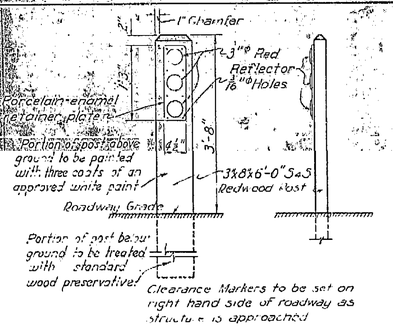

STANDARD 3 LIGHT CLEARANCE MARKER

6 Required
Scale: 1"=1'-0"

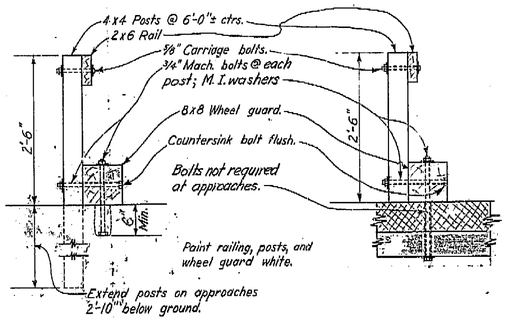

TEMPORARY GUARD RAIL

Scale: 1"=1'-0"

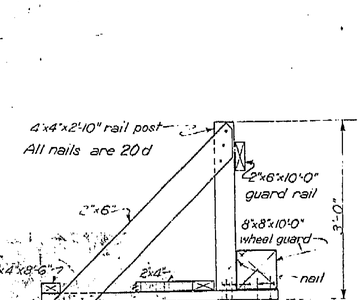

END VIEW OF BARRICADE

Scale: 1"=1'-0". Require 20 at each bridge approach.

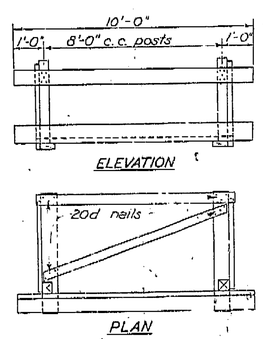

PORTABLE BARRICADE DETAILS

Scale: ½"=1'-0"

AS BUILT PLANS
Contract No.
Date Completed
Document No. 2

8C-110

WIDENING OF BRIDGES ACROSS ELDER CREEK, McCLURE CREEK AND THOMES CREEK

MISCELLANEOUS DETAILS

SCALE: As Noted	FILE NO.
BRIDGE NOS. 24-0.3, 24-0.4, 24-0.5	DRWG. NO. C-442-6.2

I HEREBY CERTIFY THAT THIS IS A TRUE AND ACCURATE COPY OF THE ABOVE DOCUMENT TAKEN UNDER MY DIRECTION AND CONTROL ON THIS DATE IN SACRAMENTO, CALIFORNIA PURSUANT TO AUTHORIZATION BY THE DIRECTOR OF PUBLIC WORKS.

DATE 12-2-71 SIGNATURE [signature] TITLE Sr. Engr.

MICROFILM - STATE OF CALIFORNIA - DEPARTMENT OF PUBLIC WORKS - MICROFILM
SCALE 1" = 50'
SCALE 1" = 20'
ClibPDF - www.fastio.com

DIST.	COUNTY	ROUTE	SECTION	SHEET NO.	TOTAL SHEETS
11	Teh	99	A	17	21

DIST. NO.	STATE	PROJ. NO.	FEDERAL AID NO.	SHEET NO.	TOTAL SHEETS
7	CAL.				

DATE APPROVED March 6, 1950

BRIDGE DEPARTMENT

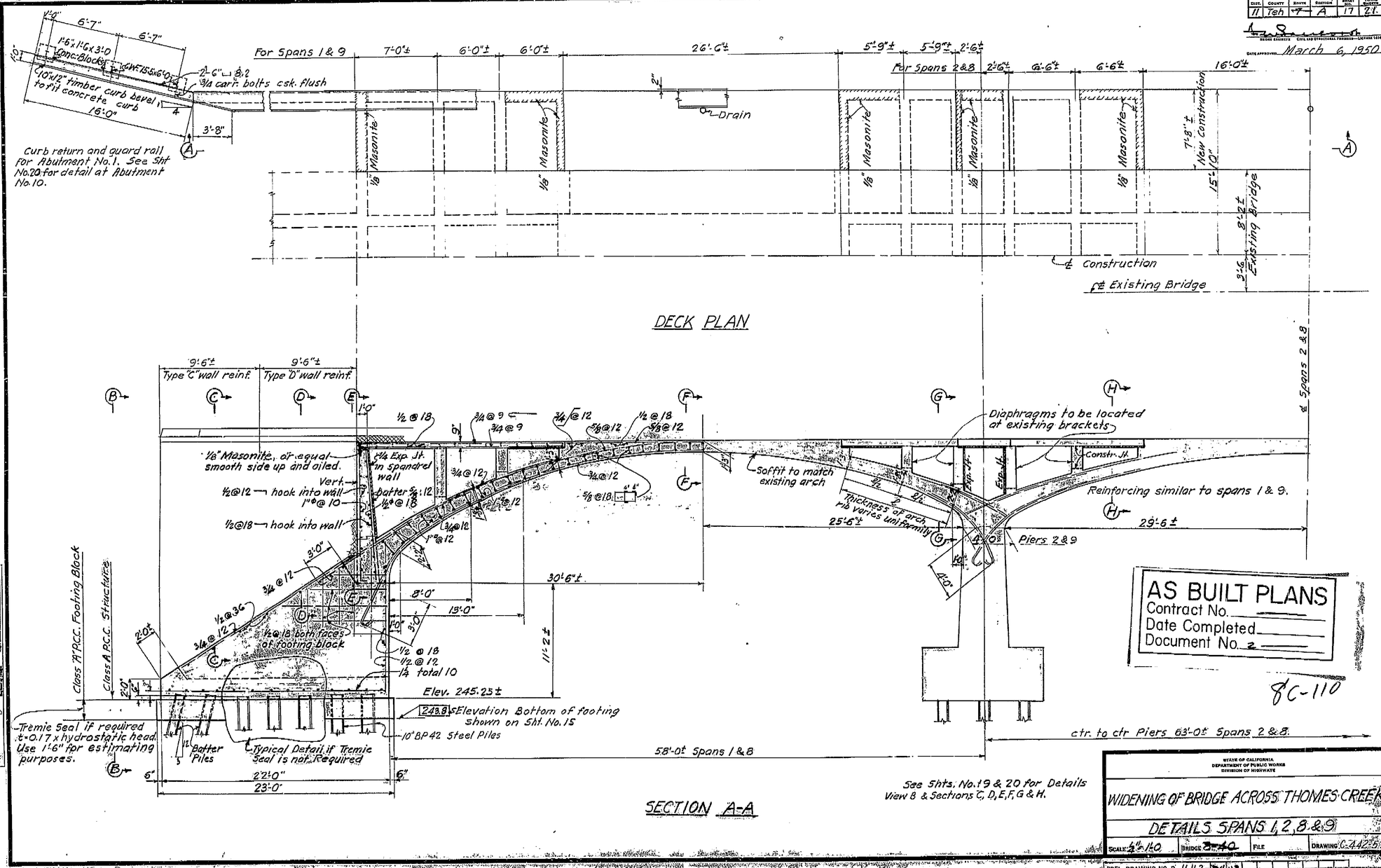

AS BUILT PLANS
Contract No.
Date Completed
Document No. 2

8C-110

Studied by	Lockheed	Date	
DESIGN	R. Kelly	2-50	Checked GHE 3-50
DETAILS	L. Ross	3-50	Checked
QUANTITIES	L. Ross	3-50	Checked
SPECIFICATIONS			Checked
Approved by			Engineer

STATE OF CALIFORNIA
DEPARTMENT OF PUBLIC WORKS
DIVISION OF HIGHWAYS

WIDENING OF BRIDGE ACROSS THOMES CREEK

DETAILS SPANS 1, 2, 8 & 9

SCALE 1/2"=1'-0" | BRIDGE 33-40 | FILE | DRAWING C-44257

ORIG. DRAWING NO. B 442-1

I HEREBY CERTIFY THAT THIS IS A TRUE AND ACCURATE COPY OF THE ABOVE DOCUMENT TAKEN UNDER MY DIRECTION AND CONTROL ON THIS DATE IN SACRAMENTO, CALIFORNIA PURSUANT TO AUTHORIZATION BY THE DIRECTOR OF PUBLIC WORKS.

DATE _____ SIGNATURE _____ TITLE _____

MICROFILM - STATE OF CALIFORNIA - DEPARTMENT OF PUBLIC WORKS - MICROFILM

ClibPDF - www.fastio.com

FED. ROAD DIV. NO.	STATE	PROJ. NO.	FISCAL YEAR	SHEET NO.	TOTAL SHEETS
7	CAL.				

DIST.	COUNTY	ROUTE	SECTION	SHEET ITEM	TOTAL SHEETS
11	Teh.	7	A	19	21

BRIDGE ENGINEER — CIVIL AND STRUCTURAL ENGINEER — LICENSE 5856

DATE APPROVED March 6, 1950

BRIDGE DEPARTMENT

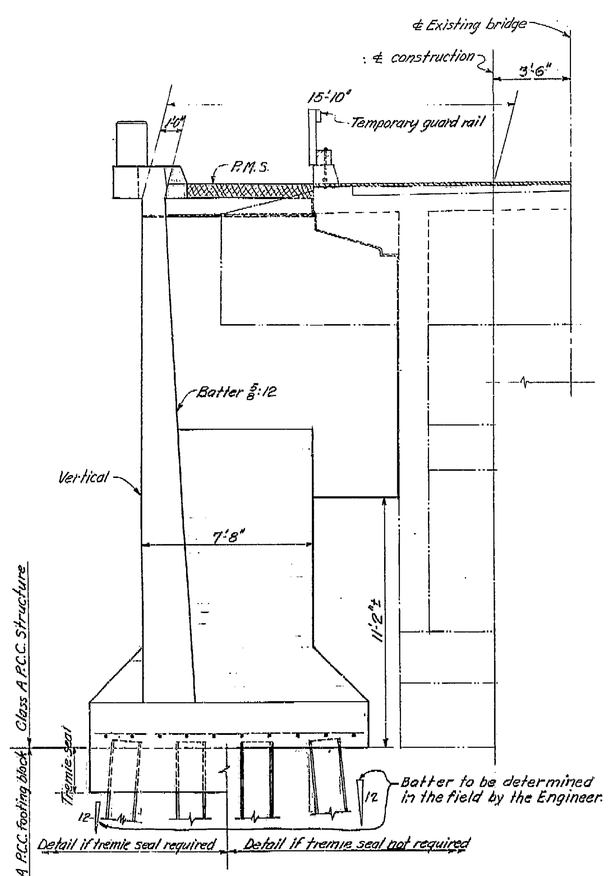

VIEW B-B

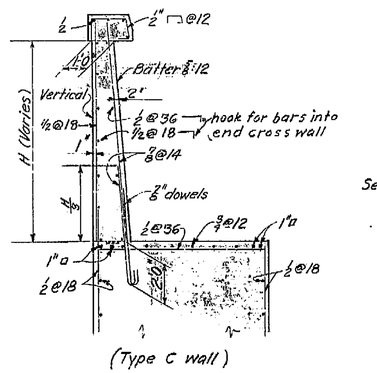

(Type C wall)

SECTION D-D

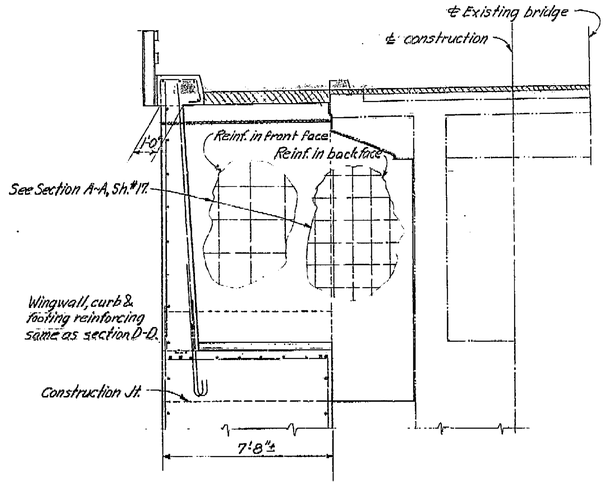

SECTION E-E

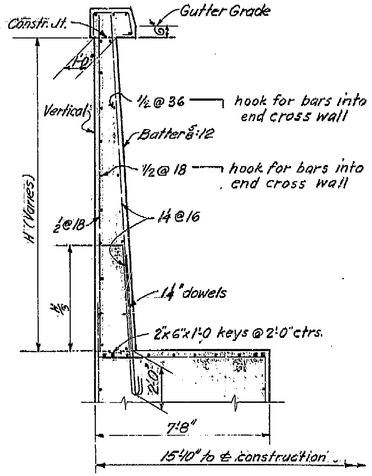

SECTION C-C
(Type D wall)

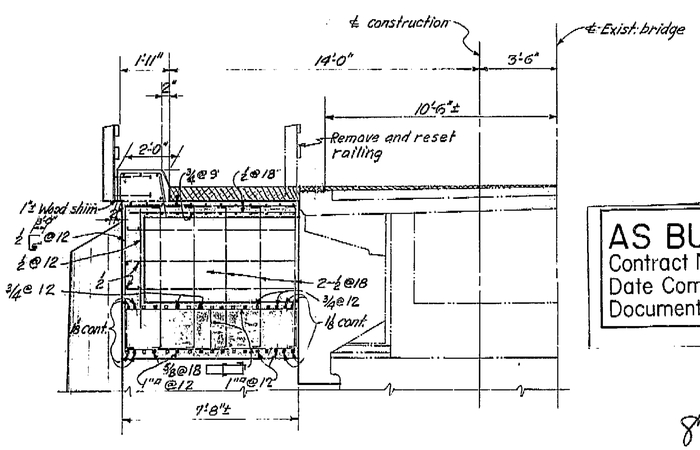

SECTION G-G

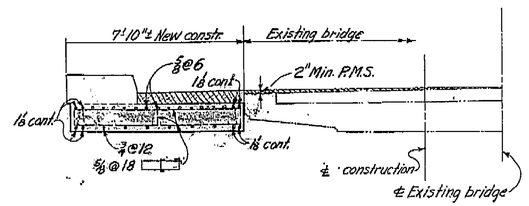

SECTION F-F

For location of View B-B and Sections see Sht. 17.

AS BUILT PLANS
Contract No. ____
Date Completed ____
Document No. 2

8C-110

STATE OF CALIFORNIA
DEPARTMENT OF PUBLIC WORKS
DIVISION OF HIGHWAYS

WIDENING OF BRIDGE ACROSS THOMES CREEK

DETAILS NO. 1

SCALE 3/4"=1'0"	BRIDGE 8-40	FILE	DRAWING C-442-59

Revised by	Date	Checked
DESIGN	6-1-50	
DETAILS	6-1-50	
QUANTITIES	6-15-50	
SPECIFICATIONS	6-15-50	

Approved by Director of Public Works

I HEREBY CERTIFY THAT THIS IS A TRUE AND ACCURATE COPY OF THE ABOVE DOCUMENT TAKEN UNDER MY DIRECTION AND CONTROL ON THIS DATE IN SACRAMENTO, CALIFORNIA PURSUANT TO AUTHORIZATION BY THE DIRECTOR OF PUBLIC WORKS.

DATE 12-2-71 SIGNATURE _____ TITLE _____

MICROFILM - STATE OF CALIFORNIA - DEPARTMENT OF PUBLIC WORKS - MICROFILM
SCALE 1" = 50'
SCALE 1" = 20'
ClibPDF - www.fastio.com

FED. ROAD DIV. NO.	STATE	PROJ. NO.	FISCAL YEAR	SHEET NO.	TOTAL SHEETS
7	CAL.				

DIST.	COUNTY	ROUTE	SECTION	SHEET NO.	TOTAL SHEETS
11	Teh	7	A	18	21

DATE APPROVED March 6, 1950

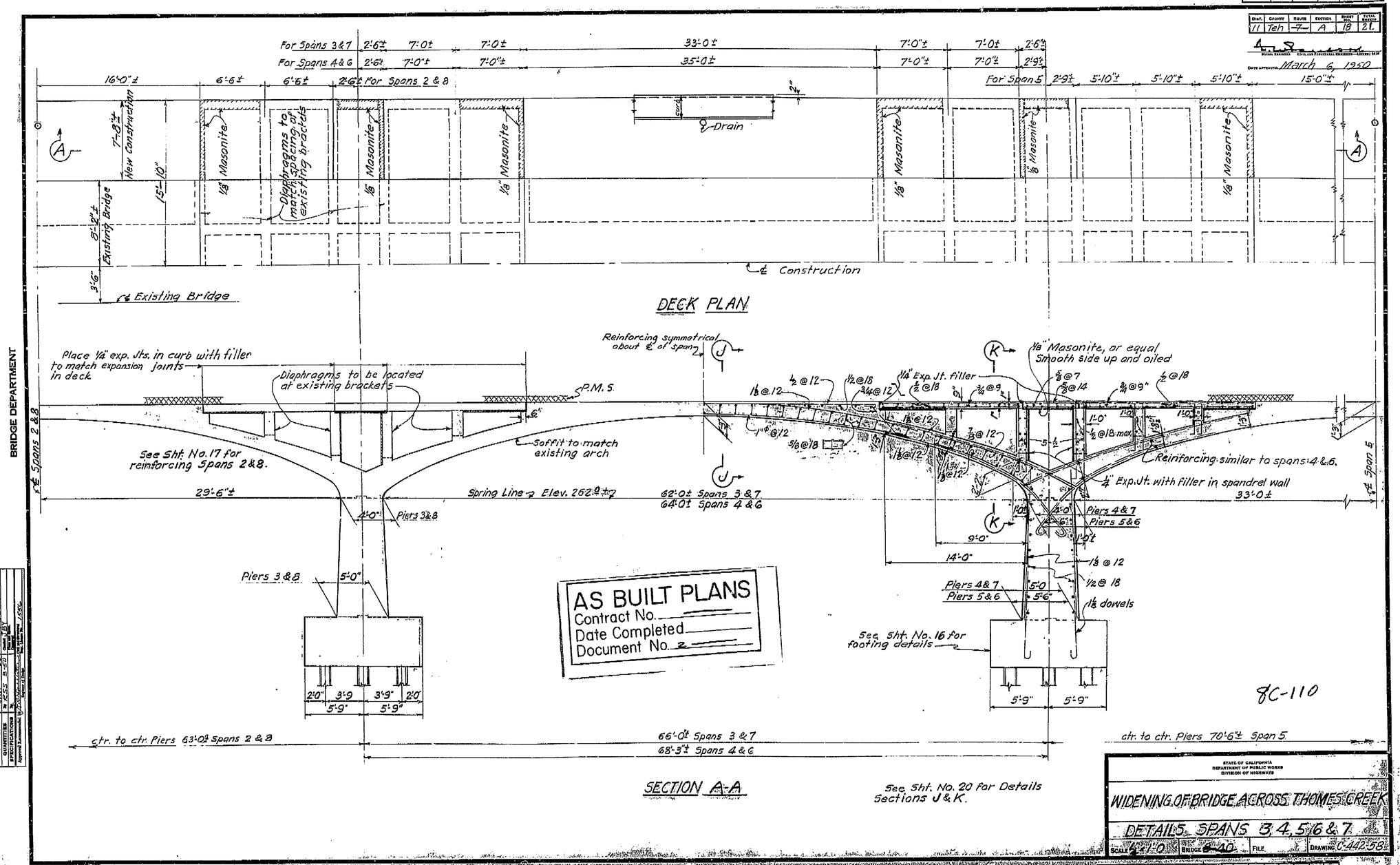

AS BUILT PLANS
Contract No.
Date Completed
Document No. 2

STATE OF CALIFORNIA
DEPARTMENT OF PUBLIC WORKS
DIVISION OF HIGHWAYS

WIDENING OF BRIDGE ACROSS THOMES CREEK

DETAILS SPANS 3, 4, 5, 6 & 7

SCALE 1/4" = 1'-0" | BRIDGE 8-40 | FILE | DRAWING C-442-58

BRIDGE DEPARTMENT

I HEREBY CERTIFY THAT THIS IS A TRUE AND ACCURATE COPY OF THE ABOVE DOCUMENT TAKEN UNDER MY DIRECTION AND CONTROL ON THIS DATE IN SACRAMENTO, CALIFORNIA PURSUANT TO AUTHORIZATION BY THE DIRECTOR OF PUBLIC WORKS.

DATE 12-2-71 SIGNATURE [signature] TITLE

ClibPDF - www.fastio.com

BRIDGE No. ~~8-40.~~ 8C-110
Sheet 1-A

Name Thomes Creek. Location II-TEH-~~7-A.~~ Co. Rd.

Dist.-Co.-Rt.-Sec.

Summary of Construction, Maintenance and Alteration Work

CONT. OR W. O. No.	DATE	DESCRIPTION	W. O. AMOUNT	FINAL COST
42-H-1		Repairs. ~~(See Short Bridge Report following.)~~		$57.00.
2-TL-6	4-5-44.	Repairs. Near Rail. Rept 2-23-44 3 Bridges.	19,000.	$18999.80
92J1 Sup.	10-16-47	Replace concrete rip rap slope	$900.00	
12K9 6/Sup.	10-1-49	Investigation of the pile foundations.	$1,100.00	
12K9	6-28-49	Exposed Piles For Br. Dept.	[illegible]	$840.37
52-2K9 2/S	7-18-51	work as recommended in report of 2-7-51	$520 [illegible]	
~~2TT-118~~ 2TT-118	~~10-23-51~~ 10-23-51	~~[illegible]~~ place sand cont as Rec. in Br. Rpt. of 2-7-51	$1,000.00	~~$1,488.23~~ $472.51
52-2TT22	12-8-52	extend existing sacked CC Riprap. Work completed 11-12-52.	$1,325.	$549.17
57-2KCC1	11-20-56	Replace sacked concrete riprap.	$1,180.	$1142.70
		Contract items $999.95 Engineering 125.00 Contingencies 55.05 TOTAL $1,180.00		
60-2K13-G	5-11-60	work as rec. in Br Rpt dated 1-28-60	$300.	$714.03

70728 4-39 2M. Est. 5634. STATE PRINTING OFFICE

ClibPDF - www.fastio.com

FED. ROAD DIST. NO.	STATE	PROJ. NO.	FISCAL YEAR	SHEET NO.	TOTAL SHEETS
2	CAL.				

DIST.	COUNTY	ROUTE	SECTION	SHEET NO.	TOTAL SHEETS
II	Teh	99	A	1	1

BRIDGE ENGINEER — STRUCTURAL ENGINEER—LICENSE 1414

APPROVED February 21, 1947

STATE OF CALIFORNIA
DEPARTMENT OF PUBLIC WORKS
DIVISION OF HIGHWAYS

BRIDGE DEPARTMENT

To Corning — To Red Bluff

Remove old rail, place new rail, curb and surfacing

Total length of bridge = 625'

89 panels @ 7'-0" = 623'-0"

ELEVATION
Scale: 1" = 80'

7'-0" ±

6 ⊔ 8.2

6 WF 15.5 — 2

6 ⊔ 8.2

½" × 3½" Carriage bolts

12"

12"

3'

4" × 4" drain at center of each span.

⅜" × 10" machine bolts.

⅜" Phillips Flush Shell or equal fitted with ⅜" × 2" stud bolt

½" × 2" machine bolts

2"

12" 12"

PART ELEVATION OF RAIL
Scale: 1" = 1'-0"

2"

6"

6"

6"

½" × 3½" Carriage bolts

6 WF 15.5

½" ø

½" ø @ 3'-6" ctrs.

2-⅞" × 10" machine bolts

1" × 6" concrete filler at each post

⅜" Phillips Flush shell or equal fitted with ⅜" × 2" stud bolts

½" × 2" machine bolt Slotted hole 3" long

10"

3"

41'-4"

10"

1'-0"

New 90-95(50'6) wearing surface

Existing surfacing

Varies to fit grade.

2"

L 8 × 4 × ½ - 0'-6"

RAIL SECTION
Scale: 1" = 1'-0"

GENERAL NOTES

All materials and workmanship to conform to the Standard Specifications dated July 1940.

All concrete to be Class "A".

All bolts to be fitted with one heavy duty lock washer.

Reinforcing steel may be taken from stock at Redding.

All holes in posts and railing to be drilled in the shop.

Rail and curb shall be true to line and grade.

All structural steel to be given one coat of red lead paint and one coat of Titanium-Oxide guard rail paint (white).

Place ½" expansion joint in curb over expansion joints in deck or curbs.

All timber to be No 1 Common Fir.

All ⅜" curb bolts to be fitted with one cut washer in addition to lock washer.

Drawn Date	Initials	Date
Designed by	H.E.	1/46
Checked by	J.L.B.	3-46
Drawn by	H.E.	1/46
Traced by	H.E.	1/46
Checked by	J.L.B.	3-46
Quantities by	H.E.	1/46
Quantity Ck'd.	-	-
Section Correct		

Engineer of Design
Structural Engineer
License 2120

MICROFILMED

1'-0"

1" × 6" × 1'-0" filler block at each post on flares at wheelguards.

12" × 12" timber curb beveled to fit concrete curb.

6'-7"

6'-7"

6 WF 15.5 × 6'-0" — 2

1'-6" × 1'-6" × 3'-0" concrete blocks — 2

6 ⊔ 8.2

¾" Carriage bolt Countersink flush

4" open joint

2" Clearance marker.

4

1

16'-0"

New road-way width 22'-0"

PLAN - RAIL FLARES
Scale: ⅛" = 1'-0"

CONTRACT PLANS
Contract No. ____
Document No. 2

Slot plate

5" × 8" × ⅜" plate

1" × 3½" carrier bar

1" × 3½"

1" × 3½"

5" × 8" × ⅜" plate

1

3

Fixed end only.

EXPANSION DETAILS
Scale: 1½" = 1'-0"

Note: Place expansion detail on post nearest to each expansion joint in deck.

2"

6"

9½"

1¾"

¾"

44"

Face of concrete

HOOK DETAIL
No scale.

THIS SET OF PLANS HAS BEEN CORRECTED TO CORRESPOND TO THE AS BUILT PRINT, DATED R.N. Pothman, ASSISTANT DISTRICT ENGINEER OCTOBER 1-31-47.

TRACING CORRECTED BY: G.S. DATE: 11-5-46

THOMES CREEK RAILING DETAILS	
SCALE - As shown	FILE No. 6C-110
BRIDGE NO. 8-40.	DRAWING No. DL-442.41

I HEREBY CERTIFY THAT THIS IS A TRUE AND ACCURATE COPY OF THE ABOVE DOCUMENT TAKEN UNDER MY DIRECTION AND CONTROL ON THIS DATE IN SACRAMENTO, CALIFORNIA PURSUANT TO AUTHORIZATION BY THE DIRECTOR OF PUBLIC WORKS.

DATE 8/24/61 SIGNATURE W. S. Hall TITLE HAO II

MICROFILM – STATE OF CALIFORNIA – DEPARTMENT OF PUBLIC WORKS – MICROFILM
SCALE 1" = 50' / 20' / 10' or 1" = 100' / 40'

ClibPDF - www.fastio.com

Br. No. 8-40

HIGH WATER DATA

Name THOMES CREEK Location II-Teh-7-A

Dist.-Co.-Rt.-Sec.

OBSERVATION DATE	OBSERVER	GAGE HEIGHT	REMARKS
12-3-41	K.Elder		The high water on Dec. 11, 1937, reached an elevation about 3.6' below the crown of the arch in the Southerly Span.
2-25-58	R.D.Royer		High water was 7.2' below intrados of Span 1.
2/25/65	T.C.Hoyce		HW-US-LB-5-1/2' below intrados North Span (58 mark 7.0 below) HW-DS-LB East of RR drift in fence 7-1/2' below intrados HW-US-RB-3.0 below intrados Span 1 drift along approach fill 100' S. Br. Stain on arch 1-ft lower RR clear 4-1/2 below crown-arch Span #1 HW-DS-RB-below RR (silt line on trash pile) 2 ft below RR Clear.

FORM BD-103

ClibPDF - www.fastio.com