TEHAMA COUNTY DEPARTMENT OF PUBLIC WORKS
GERBER, CALIFORNIA

BID BOOK

NOTICE TO BIDDERS, SPECIAL PROVISIONS, PROPOSAL, AND CONTRACT

FOR CONSTRUCTION ON

BRIDGE PREVENTATIVE MAINTENANCE PROJECT

LOCATIONS THROUGHOUT TEHAMA COUNTY, CALIFORNIA
FEDERAL-AID PROJECT NUMBER: BRLS 5908(081)

COUNTY PROJECT NUMBER: 599990A
FOR USE IN CONNECTION WITH
STATE OF CALIFORNIA, DEPARTMENT OF TRANSPORTATION
STANDARD SPECIFICATIONS, AND STANDARD PLANS,
DATED 2010
LABOR SURCHARGE AND EQUIPMENT RENTAL RATES

BID OPENING: October 12, 2016, 3:00PM (PST)

REGISTERED PROFESSIONAL ENGINEER
GARY B. ANTONE
C 36077
CIVIL
STATE OF CALIFORNIA

9-12-16

Template Version V11

ENGINEER SIGNATURE PAGE

BRIDGE PREVENTATIVE MAINTENANCE PROJECT

FUNDED WITH BRIDGE PREVENTATIVE MAINENANCE PROGRAM FUNDS

FEDERAL-AID PROJECT NUMBER: BRLS 5908(081)

COUNTY PROJECT NUMBER: 599990A

THE SPECIAL PROVISIONS CONTAINED HEREIN HAVE BEEN PREPARED UNDER THE DIRECTION OF THE FOLLOWING REGISTERED PERSON.

9/12/2016

REGISTERED CIVIL ENGINEER DATED

Page Intentionally
Left Blank

TABLE OF CONTENTS

ENGINEER SIGNATURE PAGE ..... **I**
TABLE OF CONTENTS ..... **III**
List of Tables VII
IMPORTANT SPECIAL NOTICE **1**
NOTICE TO BIDDERS **4**
BID ITEM SECTION REFERENCE **6**
STANDARD PLANS LIST **7**
SPECIAL PROVISIONS **8**
SECTION 1 GENERAL **8**
1.A Project Specifications and Plans 8
1.B References 8
1.C Abbreviations 8
1.D Definitions and Terms 8
SECTION 2 BIDDING **11**
2.A Bid Documents 11
2.A-1 General 11
2.B Disadvantaged Business Enterprises 11
2.B-1 DBE Commitment Submittal 12
2.B-2 DBE Good Faith Efforts Submittal 12
2.B-3 DBE / Non-DBE Listing of Subcontractors 13
2.B-4 Data Used To Determine DBE Contract Goal 14
2.C Bid Document Completion 14
2.C-1 General 14
2.C-2 Subcontractors List 14
2.C-3 Required Items for Bid 14
2.D Bidder's Security 14
2.E Non-Mandatory Prebid Meeting 14
2.F Bid Opening 14
2.G Bid Rigging 14
2.H Contractor Registration 15
SECTION 3 CONTRACT AWARD AND EXECUTION **16**
3.A General 16
3.B Contract Award 16
3.B-1 Bid Protest 16
3.B-1.a Bid Protest Procedure 16
3.B-2 Bid Evaluation 16
3.C Contract Bonds 16
3.D Contractor License 17
3.E Payee Data Record 17
3.F DBE Information Form 17
3.G Form FHWA-1273 17
3.H Contract Execution 17
3.I Bidder's Securities 18
SECTION 4 SCOPE OF WORK **19**
4.A General 19
4.B Location of Work 19
4.C Description of Work 19
4.D Contract Documents Provided to Contractor 19
4.E Change Orders - General 19
4.F Work Character Changes 19
4.G Differing Site Conditions 19
4.G-1 Differing Site Conditions 20
4.G-2 Subsurface Conditions 20
4.G-3 Significant Changes in the Character of Work 20
4.G-4 Contractor's Notification 21
4.G-5 Engineer's Investigation and Decision 21

SECTION 5 CONTROL OF WORK 21
5.A General 21
5.B Subcontracting 21
5.B-1 Subcontractor and Disadvantaged Business Enterprise Records 24
5.B-1.a Performance of Disadvantaged Business Enterprises 24
5.B-1.b Disadvantaged Business Enterprises (DBE) Certification Status Change, Exhibit 17-O 26
5.B-1.c Final Report - Utilization of Disadvantaged Businesses Exhibit 17-F 28
5.B-1.d Monthly DBE Trucking Verification 29
5.C Permits, Licenses, Agreements, and Certifications - After Award 29
5.D Submittals 30
5.E Records 30
5.F Construction Limits 30
5.G Property and Facilities Preservation 30
5.H Vandalism 30
5.I Potential Claims and Dispute Resolution 31
5.I-1 Alternative Dispute Resolution 31
5.I-1.a General 31
5.I-1.b Dispute Resolution Ladder 31
5.I-1.b(i) General 31
5.I-1.b(ii) Selection Process and Operation 31
5.I-1.b(iii) Compensation 31
5.I-1.b(iv) Dispute Resolution Ladder Agreement 32
5.I-1.c Dispute Resolution Advisor 32
5.I-1.c(i) General 32
5.I-1.c(ii) Selection Process, Replacement of DRA Member and Operation 33
5.I-1.c(iii) Compensation 33
5.I-1.c(iv) Dispute Resolution Advisor Agreement 34
5.I-1.d Dispute Review Board 39
5.I-1.d(i) General 39
5.I-1.d(ii) Selection Process, Disclosure and Appointments 39
5.I-1.d(iii) Compensation 41
5.I-1.d(iv) Replacement of DRB Members 41
5.I-1.d(v) Operation 41
5.I-1.d(vi) Dispute Review Board Agreement 45
SECTION 6 CONTROL OF MATERIALS 51
6.A General 51
6.B Authorized Materials List 51
6.C Buy America 51
6.D Quality Assurance 51
SECTION 7 LEGAL RELATIONS AND RESPONSIBILITY TO THE PUBLIC 53
7.A General 53
7.B Prevailing Wage 53
7.B-1 Wages 53
7.C Certified Payroll Records 53
7.D Public Safety 53
7.E Indemnification - General 53
7.F Insurance 54
7.G Federal Laws for Federal-Aid Contracts 54
7.G-1 FHWA- 1273 54
7.G-2 Female and Minority Goals 54
7.G-3 Federal Trainee Program 55
SECTION 8 PROSECUTION AND PROGRESS 56
8.A General 56
8.B Schedule 56
8.C Preconstruction Conference 57
8.D Beginning of Work, Time of Completion and Liquidated Damages 57
8.D-1 Beginning of Work 57
8.D-2 Time of Completion 58
8.D-3 Liquidated Damages 58
8.E Suspensions 58
8.F Delays 59

SECTION 9 PAYMENT 60
9.A General 60
9.B Payment Scope 60
9.C Force Account 60
9.D Payment Adjustments for Price Index Fluctuations 60
9.E Progress Payments 61
9.E-1 Mobilization 61
9.E-2 Withholds 61
9.E-3 Retention 61
9.F Proposed Final Estimate 61
9.G Prompt Payment of Funds Withheld to Subcontractors 62
9.H Prompt Progress Payment To Subcontractors 62
9.I Quantities of Aggregate and Other Roadway Materials 62
9.J Arbitration 62
SECTION 10 GENERAL 62
10.A Work Sequencing 62
SECTION 11 QUALITY CONTROL AND ASSURANCE 63
SECTION 12 TEMPORARY TRAFFIC CONTROL 63
12.A Flagging Costs 63
12.B Traffic-Handling Equipment and Devices 63
12.B-1 Construction Area Signs 63
12.B-2 Portable Changeable Message Signs 63
12.B-2.a Construction 64
12.C Maintaining Traffic 64
12.C-1 Closure Requirements 64
12.C-2 Closure Schedule and Conditions 64
12.D Traffic Control System For Lane Closure 65
12.D-1 General 65
12.D-2 Materials 65
12.D-3 Construction 65
12.D-4 Payment 65
12.E Temporary Pavement Delineation 66
12.E-1 General 66
12.E-2 Materials 66
12.E-2.a General 66
12.E-2.b Temporary Lane Line and Centerline Delineation 66
12.E-2.c Temporary Edge Line Delineation 66
12.E-3 Construction 66
12.E-3.a General 66
12.E-3.b Temporary Lane Line and Centerline Delineation 67
12.E-3.c Temporary Edge Line Delineation 67
12.E-4 Payment 67
SECTION 13 WATER POLLUTION CONTROL 68
13.A Water Pollution Control Program 68
13.A Definitions and Abbreviations 68
13.B Job Site Management 68
13.C Temporary Concrete Washout 68
13.D Payment 69
13.D-1 Maintenance of Temporary Items 69
SECTION 14 ENVIRONMENTAL STEWARDSHIP 69
14.A Dust Control 69
14.A-1 Payment 69
SECTION 15 EXISTING FACILITIES 69
15.A Cold Planing Asphalt Concrete Pavement 69
15.A-1.a(i) General 69
15.A-1.a(ii) Materials 69
15.A-1.a(iii) Construction 70
15.A-1.b Payment 70
15.B Concrete Removal 71
15.C Bridge Removal 71

15.D Bridge Rehabilitation ... 71
15.D-1 Prepare Concrete Deck Surface ... 71
15.D-2 Remove Asphalt Concrete Surfacing ... 71
15.D-3 Bridge Deck Methacrylate Resin Treatment ... 71
15.D-4 Polyester Concrete Overlay ... 72
SECTION 17 WATERING ... 74
SECTION 22 FINISHING ROADWAY ... 74
SECTION 37 BITUMINOUS SEALS ... 74
SECTION 39 HOT MIX ASPHALT ... 74
39.A General ... 74
39.A-1 General ... 74
39.A-2 Materials ... 74
39.A-2.a Aggregate ... 74
39.A-2.b Reclaimed Asphalt Pavement ... 75
39.A-3 Hot Mix Asphalt Mix Design ... 76
39.A-3.a General ... 76
39.A-3.b Job Mix Formula Submittal ... 77
39.A-3.c Job Mix Formula Verification ... 77
39.A-3.d Job Mix Formula Renewal ... 78
39.A-3.e Job Mix Formula Acceptance ... 79
39.A-4 Contractor Quality Control ... 79
39.A-4.a General ... 79
39.A-4.b Reclaimed Asphalt Pavement ... 80
39.A-5 Dispute Resolution ... 80
39.A-6 Production ... 80
39.A-6.a General ... 80
39.A-6.b Mixing ... 80
39.A-7 Transporting, Spreading, and Compacting ... 80
39.A-8 Smoothness ... 84
39.A-9 Miscellaneous Areas and Dikes ... 84
39.B Method Construction Process ... 84
39.B-1 Acceptance Criteria ... 84
SECTION 51 CONCRETE STRUCTURES ... 86
51.A Concrete Bridge Decks ... 86
51.B Drill and Bond Dowel ... 86
51.C Joints ... 86
51.C-1 Clean Expansion Joints ... 87
51.C-1.a General ... 87
51.C-1.b Payment ... 87
51.C-2 Joint Seal Type A (MR 1") ... 87
51.C-3 Joint Seal Type B (MR 2") ... 87
51.C-4 Joint Seal Assemblies with a Movement Rating of 4 inches or Less ... 87
51.D Elastomeric Bearing Pads ... 87
51.E Approach Slabs ... 87
51.E-1 Payment ... 87
SECTION 52 REINFORCEMENT ... 88
52.A-1 Payment ... 88
SECTION 59 PAINTING ... 88
SECTION 84 TRAFFIC STRIPES AND PAVEMENT MARKINGS ... 88
84.A Payment ... 88
SECTION 85 PAVEMENT MARKERS ... 89
BID TO THE COUNTY OF TEHAMA ... 1
List of Subcontractors ... 5
Local Agency Bidder DBE Commitment (Construction Contracts) Exhibit 15-G ... 6
Exhibit 15-H DBE Information- Good Faith Efforts ... 8
Bidder's List of Subcontractors (DBE and Non-DBE) (Exhibit 12-B LAPM) ... 11
Equal Employment Opportunity Certification ... 12
Federal Minimum Wage Rates ... 12
Non-Lobbying Certification For Federal-Aid Contracts ... 13

Public Contract Code 16
Noncollusion Affidavit 17
Debarment And Suspension Certification 18
Opt-Out Form 19
Bid Signature Page 20
Bidder's Bond 21
OWNER-CONTRACTOR AGREEMENT 1
Bid Item List 3
PAYMENT BOND 6
PERFORMANCE BOND 8
FORM FHWA- 1273 10
Title VI Assurances 22

LIST OF TABLES

Table 1: Typical Test Methods 52
Table 2: Preconstruction Topic Table 57

****

IMPORTANT SPECIAL NOTICE

****

Bidders are advised that, as required by federal law, the County of Tehama is implementing Disadvantaged Business Enterprise requirements for Disadvantaged Business Enterprises (DBE). Refer to Section 0 "The first four paragraphs of Section 2-1.06A of the Standard Specifications shall not apply.

Sections 2-1.18 through 2-1.27 of the Standard Specifications shall not apply.

Examine the job site and bid documents. Notify the Department of apparent errors and patent ambiguities in the plans, specifications, and Bid Item List. Failure to do so may result in rejection of a bid or rescission of an award.

Bid submission is your acknowledgment that you have examined the job site and bid documents and are satisfied with:

1. General and local conditions to be encountered
2. Character, quality, and scope of work to be performed
3. Quantities of materials to be furnished
4. Character, quality, and quantity of surface and subsurface materials or obstacles
5. Requirements of the contract

Bids must be submitted on forms included in the Bid Book. Bid documents can be examined at area Builder's Exchanges. Documents are available for download on CIP List (www.CIPLIST.com).

Copies are on file and open to public inspection or may be obtained for a NONREFUNDABLE FEE of $50.00 PER SET including ½ size formatted 11x17 paper, (full size individual sheets are available at a cost of $3.50 per sheet) at Tehama County Public Works, 9380 San Benito Avenue, Gerber, CA 96035.

The Bid Documents must be bound in a book together with the Notice to Bidders, Special Provisions, and contract. The project plans are a separate attachment. **Neither the Bid form nor any other portion of said book shall be detached therefrom.** This includes all DBE related bid forms. **An entire bound Bid Book shall be submitted at the time of bid opening.**

- Disadvantaged Business Enterprises" of these Special Provisions for more information.
- The Bid Documents are bound in a book together with the Notice to Bidders, Special Provisions, and Contract. The project plans are a separate attachment. **Neither the Bid form nor any other portion of said book shall be detached therefrom.** This includes all DBE related bid forms. The entire bound Bid Book shall be submitted at the time of bid opening. Refer to Section 2.A , "Bid Documents" of these Special Provisions for more information.
- Submittal of a complete Subcontractors List must be submitted at bid opening. Refer to Section 2.C-2 of these Special Provisions for more information.
- Submittal of Exhibit 12-B "Bidder's List of Subcontractors (DBE and Non-DBE)" in accordance with Section 2.B-3 "DBE / Non-DBE Listing of Subcontractors" of these Special Provisions.
- This is a federally funded project and attention is directed to Section 7.G "Federal Laws for Federal-Aid Contracts" of these Special Provisions for more information, in particular, Section I. of Form FHWA-1273 "General," which requires all sub-contracts to physically have the "Required Contract Provisions, Federal-Aid Construction Contracts" (Form 1273) inserted, and Part-IV-1(a) which requires persons to be paid on a weekly basis.

- Attention is directed to Section 12-1.03 “Flagging Costs” of the Standard Specifications is hereby deleted. All flagging costs will be totally (100%) borne by the contractor and no division of costs will be made therefor.
- Attention is directed to Section 12.C-1 “Closure Requirements” of these Special Provisions as traffic shall be maintained using 1-way reversing traffic control operations.
- Attention is directed to Section 13.D-1, “Maintenance of Temporary Items” of these Special Provisions as all costs to maintain temporary sediment and erosion control measures will be totally (100%) borne by the contractor and no division of costs will be made therefor.
- Attention is directed to Section 2.H “Contractor Registration” of these Special Provisions for information on a newly established public works Contractor Registration Program, which requires all contractors and subcontractors bidding and performing work on Public Works Projects to register on an annual basis (each July 1 through June 30 state fiscal year) with the California Department of Industrial Relations (DIR).

Page Intentionally
Left Blank

NOTICE TO BIDDERS

COUNTY OF TEHAMA
DEPARTMENT OF PUBLIC WORKS

Sealed bids for the work shown in the plans and specifications entitled:

BRIDGE PREVENTATIVE MAINTENANCE PROJECT

PLANS AND SPECIAL PROVISIONS

FEDERAL-AID PROJECT NUMBER: BRLS 5908(081)
COUNTY PROJECT NUMBER: 599990A

will be received at the Department of Public Works office at 9380 San Benito Avenue, Gerber, California, 96035 until 3:00PM (PST) on October 12, 2016, at which time they will be publicly opened and read aloud in the conference room at the aforementioned address.

DESCRIPTION OF WORK

Bridge maintenance activities, on 13 structures throughout Tehama County including: cleaning bridge deck surfaces, applying methacrylate polymer sealant, and polyester concrete overlay, removing of asphalt surfacing, replacing joint seals and assemblies, reconstructing approach slabs, and placing pavement markings, and striping.

ENGINEER'S ESTIMATE

The Engineer's Estimate for this contract is $1,700,000.

DISADVANTAGED BUSINESS ENTERPRISE GOAL

The DBE Contract goal is **8%**

TRAINEES OR APPRENTICES

The number of trainees or apprentices for this contract is **-0-**.

CONTRACT TIME

The project has **75** Working Days.

PRE-BID MEETING

A **non-mandatory** pre-bid meeting is scheduled for **October 5, 2016** at 10:00AM at the offices of Tehama County Public Works, 9380 San Benito Ave, Gerber, CA. This meeting is to inform bidders and potential subcontractors of project requirements, arranging solicitations, times for the presentation of bids, quantities, specifications, and delivery schedules in ways that facilitate DBE, and other small businesses participation (e.g., unbundling large contracts to make them more accessible to small businesses, requiring or encouraging prime contractors to subcontract portions of work that they might otherwise perform with their own forces) of subcontracting and material supply opportunities. The County will also answer any questions pertaining to the Plans, Contract, and Specifications including the Alternative bid procedures, if any. Bidder's attendance at this meeting will **non-mandatory**.

BUY AMERICA PROVISIONS

THIS PROJECT IS SUBJECT TO THE "BUY AMERICA" PROVISIONS OF THE SURFACE TRANSPORTATION ASSISTANCE ACT OF 1982 AS AMENDED BY THE INTERMODAL SURFACE TRANSPORTATION EFFICIENCY ACT OF 1991.

Bids are required for the entire work described herein.

CONTRACTOR'S LICENSE CLASSIFICATION

The contractor shall possess either a Class A OR C12 license at the time this contract is awarded. This contract is subject to state contract nondiscrimination and compliance requirements pursuant to Government Code, Section 12990.

Inquiries or questions based on alleged patent ambiguity of the plans, specifications or estimate must be communicated as a bidder inquiry prior to bid opening. Any such inquiries or questions, submitted after bid opening, will not be treated as a bid protest.

OBTAINING OR INSPECTING CONTRACT DOCUMENTS

Bid documents can be examined at area Builder's Exchanges. Documents are available for download on CIP List (www.CIPLIST.com).

Copies are on file and open to public inspection or may be obtained for a NONREFUNDABLE FEE of $50.00 PER SET including ½ size formatted 11x17 paper, (full size individual sheets are available at a cost of $3.50 per sheet) at Tehama County Public Works, 9380 San Benito Avenue, Gerber, CA 96035.

Technical questions should be directed to the office of the County Engineer, Kevin Rosser, Senior Civil Engineer, telephone (530) 385-1462 ex. 3051.

The successful bidder shall furnish a payment bond and a performance bond.

The County of Tehama affirms that in any contract entered into pursuant to this advertisement, disadvantaged business enterprises will be afforded full opportunity to submit bids in response to this invitation.

FEDERAL AND CALIFORNIA PREVAILING WAGE REQUIREMENTS

Federal minimum wage rates are not included in these specifications. They may be obtained at the Internet Web Site http://www.wdol.gov/dba.aspx A copy is also available at the Offices of Tehama County Public Works, 9380 San Benito Avenue, Gerber, CA 96035 If there is a difference between the minimum wage rates predetermined by the Secretary of Labor and the general prevailing wage rates determined by the Director of the California Department of Industrial Relations for similar classifications of labor, the Contractor and subcontractors shall pay not less than the higher wage rate. The Department will not accept lower State wage rates not specifically included in the Federal minimum wage determinations. This includes "helper" (or other classifications based on hours of experience) or any other classification not appearing in the Federal wage determinations. Where Federal wage determinations do not contain the State wage rate determination otherwise available for use by the Contractor and subcontractors, the Contractor and subcontractors shall pay not less than the Federal minimum wage rate, which most closely approximates the duties of the employees in question.

The U.S. Department of Transportation (DOT) provides a toll-free "hotline" service to report bid rigging activities. Bid rigging activities can be reported Mondays through Fridays, between 8:00 a.m. and 5:00 p.m., Eastern Time, Telephone No. 1-800-424-9071. Anyone with knowledge of possible bid rigging, bidder collusion, or other fraudulent activities should use the "hotline" to report these activities. The "hotline" is part of the DOT's continuing effort to identify and investigate highway construction contract fraud and abuse and is operated under the direction of the DOT Inspector General. All information will be treated confidentially and caller anonymity will be respected.

PUBLIC CONTRACT CODE SECTION 22300

Pursuant to Public Contract Code Section 22300, for monies earned by the Contractor and withheld by the County to ensure the performance of the Contract, the Contractor, may, at its option, choose to substitute securities meeting the requirements of said Public Contract Code Section 22300. Such securities shall be valued by the County Treasurer-Tax Collector, whose decision shall be final. Securities not listed under Public Contract Code Section 22300 or Government Code Section 16430 must be pre-qualified by the County Treasurer-Tax Collector before bid opening in order to be accepted by the County as security.

BOARD OF SUPERVISORS; COUNTY OF TEHAMA

BY: Gary B. Antone, Director
Department of Public Works

9-12-16
Date

Advertisement #1 September 22, 2016
Advertisement #2 September 29, 2016

BID ITEM SECTION REFERENCE

Section Reference	Item No.		Item Description	Unite Meas.	Quantity
9.E-1	1		Mobilization	LS	LUMP SUM
12	2		Traffic Control System	LS	LUMP SUM
12.B-1	3		Construction Area Signs	LS	LUMP SUM
12.B-2	4		Portable Changeable Message Sign	LS	LUMP SUM
13.A	5		Prepare Water Pollution Control Program	LS	LUMP SUM
13.B	6		Job Site Management	LS	LUMP SUM
13.C	7		Temporary Concrete Washout	LS	LUMP SUM
15.A	8		Cold Plane Asphalt Concrete Pavement	SQYD	670
15.B	9		Concrete Removal	CY	12
15.C	10		Bridge Removal (Portion)	EA	4
15.D-1	11		Prepare Concrete Bridge Deck Surface	SQFT	125,236
15.D-2	12		Remove Asphalt Concrete Surfacing	SQFT	4,850
15.D-3	13		Furnish Bridge Deck Treatment Material (Methacrylate)	GAL	1,392
15.D-3	14		Treat Bridge Deck (Methacrylate)	SQFT	125,236
15.D-3 / 15.D-4	15		Public Safety Plan	LS	LUMP SUM
15.D-4	16		Furnish Polyester Concrete Overlay	CF	1,476
15.D-4	17		Place Polyester Concrete Overlay	SQFT	23,623
37	18		Slurry Seal	TON	1
39	19		Hot Mix Asphalt- Type B 1/2" Method	TON	55
51	20		Structural Concrete-Bridge	CY	17
51.B	21		Drill and Bond Dowel	LF	46
51.C-2	22		Joint Seal Type A (MR 1")	LF	180
51.C-3	23		Joint Seal Type B (MR 2")	LF	65
51.C-4	24	(P)	Joint Seal Assembly (MR 4")	LF	132
51.D	25		Replace Bearing Pad	EA	2
51.E	26		Structural Concrete, Approach Slab (TYPE R)	LS	LUMP SUM
52	27	(P)	Bar Reinforcing Steel (Bridge)	LB	801
59	28		Clean and Paint Structural Steel (Existing Bridge)	LS	1
84	29		Thermoplastic Traffic Stripe	LF	9,022
85	30		Pavement Marker	EA	753

STANDARD PLANS LIST

The Standard Plan sheets applicable to this contract include, but are not limited to those indicated below. Applicable Revised Standard Plans (RSP) and New Standard Plans (NSP) indicated below are included in the project plans as individual Standard Plan sheets.

PLAN NO.	
	ABBREVIATIONS, LINES, SYMBOLS AND LEGEND
A10A	Abbreviations (Sheet 1 of 2)
A10B	Abbreviations (Sheet 2 of 2)
	PAVEMENT MARKERS, TRAFFIC LINES, AND PAVEMENT MARKINGS
A20A	Pavement Markers and Traffic Lines, Typical Details
A20B	Pavement Markers and Traffic Lines, Typical Details
A20C	Pavement Markers and Traffic Lines, Typical Details
A20D	Pavement Markers and Traffic Lines, Typical Details
	OBJECT MARKERS, DELINEATORS, CHANNELIZERS AND BARRICADES
A73A	Object Markers
A73B	Markers
	PORTABLE CONCRETE BARRIER
A63A	Portable Concrete Barrier (Type 60K)
A63B	Portable Concrete Barrier (Type 60K)
	PAVEMENTS
P70	Hot Mix Asphalt Paving (Longitudinal Tapered Notched Wedge Joint)
RSP P74	Pavement Edge Treatments
RSP P75	Pavement Edge Treatments - Overlays
RSP P76	Pavement Edge Treatments - New Construction
	TEMPORARY CRASH CUSHIONS, RAILING AND TRAFFIC SCREEN
T3A	Temporary Railing (Type K)
T3B	Temporary Railing (Type K)
T5	Temporary Terminal Section (Type K)
	TEMPORARY TRAFFIC CONTROL SYSTEMS
T13	Traffic Control System for Lane Closure on Two Lane Conventional Highways
	TEMPORARY WATER POLLUTION CONTROL
T51	Temporary Water Pollution Control Details (Temporary Silt Fence)
T52	Temporary Water Pollution Control Details (Temporary Straw Bale Barrier)
T56	Temporary Water Pollution Control Details (Temporary Fiber Roll)
T57	Temporary Water Pollution Control Details (Temporary Check Dam)
T59	Temporary Water Pollution Control Details (Temporary Concrete Washout Facility)
T61	Temporary Water Pollution Control Details (Temporary Drainage Inlet Protection)
T62	Temporary Water Pollution Control Details (Temporary Drainage Inlet Protection)
T63	Temporary Water Pollution Control Details (Temporary Drainage Inlet Protection)
T64	Temporary Water Pollution Control Details (Temporary Drainage Inlet Protection)
	JOINT SEALS
B6-21	Joint Seals (Maximum Movement Rating = 2")

SPECIAL PROVISIONS

SECTION 1 GENERAL

1.A PROJECT SPECIFICATIONS AND PLANS

The work embraced herein shall conform to the provisions in the Standard Specifications dated 2010 and the Standard Plans dated 2010, of the Department of Transportation insofar as the same may apply, and these Special Provisions.

In case of conflict between the Standard Specifications and these Special Provisions, these Special Provisions shall take precedence over and shall be used in lieu of the conflicting portions.
Amendments to the Standard Specifications set forth in these Special Provisions shall be considered as part of the Standard Specifications for the purposes set forth in Section 1, "General," of the Standard Specifications. Whenever either the term "Standard Specifications is amended" or the term "Standard Specifications are amended" is used in the Special Provisions, the text or table following the term shall be considered an amendment to the Standard Specifications. In case of conflict between such amendments and the Standard Specifications, the amendments shall take precedence over and be used in lieu of the conflicting portions.

1.B REFERENCES

Refer to Section 1-1.05, "References" of the Standard Specifications.

Replace "current" in the 2nd paragraph of section 1-1.05 with:
most recent

1.C ABBREVIATIONS

Refer to Section 1-1.06, "Abbreviations" of the Standard Specifications.

Delete the abbreviation and its meaning for UDBE in the 1st table of section 1-1.06

Add to the 1st table in section 1-1.06:

LCS	Department's lane closure system
POC	pedestrian overcrossing
QSD	qualified SWPPP developer
QSP	qualified SWPPP practitioner
TRO	time-related overhead
WPC	water pollution control

1.D DEFINITIONS AND TERMS

Wherever in the Standard Specifications, Special Provisions, Notice to Bidders, Bid, Contract, or other contract documents the following terms are used; the intent and meaning shall be interpreted as follows:

Contractor - You - Person or business or its legal representative entering into a contract with the Department for performance of work.

County - County of Tehama, California, a legal entity organized and existing in the State of California, where reference is made to the agency administering the Contract.

Bid Package – Bid Book including Notice to Bidders, Bid Documents, Contract, Special Provisions and Project Plans.

Contract Documents – Refers collectively to the Contract, Special Provisions, Project Plans, Notice to Bidders, Bid Documents, and Standard Specifications.

Contract Time - Number of original working days as adjusted by any time adjustment.

Day – 24 consecutive hours running from midnight to midnight; calendar day.

1. **business day:** Day on the calendar except Saturday, Sunday or holiday.
2. **working day:** Time measure unit for work progress. A working day is any day except:
   2.1. Saturday, Sunday and holiday.
   2.2. Day when you cannot perform work on the controlling activity for at least 50 percent of the day with at least 50 percent of the normal labor and equipment due to any of the following:
      2.2.1. Adverse weather-related conditions that cause the Contractor to dismiss the crew.
      2.2.2. Maintaining traffic under the Contract.
      2.2.3. Engineer's direction to suspend the controlling activities for reasons unrelated to the Contractor's performance.
      2.2.4. Unanticipated event not caused by either party such as:
         2.2.4.1. Act of God
         2.2.4.2. Act of a public enemy.
         2.2.4.3. Epidemic.
         2.2.4.4. Fire.
         2.2.4.5. Flood.
         2.2.4.6. Governor-declared state of emergency.
         2.2.4.7. Landslide.
         2.2.4.8. Quarantine restriction.
      2.2.5. Issue involving a third party, including:
         2.2.5.1. Industry or area-wide labor strike.
         2.2.5.2. Material shortage.
         2.2.5.3. Freight embargo.
         2.2.5.4. Jurisdictional requirement of a law enforcement agency.
         2.2.5.5. Workforce labor dispute of a utility or nonhighway facility owner resulting in a nonhighway facility rearrangement not described and not solely for the Contractor's convenience. Rearrangement of a nonhighway facility includes installation, relocation, alteration, or removal of the facility.

Department or **Department of Transportation -** Department of Public Works of the County of Tehama, California.

Director or Director of Transportation - The Board of Supervisors of the County of Tehama, California.

Disadvantaged Business Enterprise: Disadvantaged Business Enterprise as defined in 49 CFR 26.5.

Engineer - The Director of Public Works of the County of Tehama, California, acting either directly or through duly authorized agents or consultants.

Early Completion Time - Difference in time between an early scheduled completion date and the Contract completion date.

Highway - Highway, roadway, street, avenue, lane, boulevard, or other public thoroughfare for vehicular traffic.

Job Site Activities – Work done within the physical limits of the Contract.

Laboratory or **Transportation Laboratory -** The established laboratory of the County of Tehama Department of Public Works or laboratories authorized by the County to test materials and work involved in the contract.

Liquidated Damages - The amount prescribed in the Special Provisions, pursuant to the authority of Government Code Section 53069.85 to be paid to the County of Tehama or to be deducted from any payments due or to become due the Contractor for each day of delay in completing the whole or any specified portion of the work beyond the time allowed in the Special Provisions.

Mobilization: Preparatory work that must be performed or costs incurred before starting work on the various items on the job site (Pub Cont Code § 10104).

Scheduled Completion Date: Planned work completion date shown on the current schedule.

Standard Specifications – The 2010 edition of the Standard Specifications of the State of California, Department of Transportation. Any reference therein to the State of California or a State agency, office or officer shall be interpreted to refer to the County of Tehama or its corresponding agency, office, or officer acting under this contract.

State - County of Tehama, California, a legal entity organized and existing in the State of California, where reference is made to the agency administering the Contract.

State Contract Act - All applicable provisions of the Public Contract Code (excluding Chapter 1, Division 2, Part 2, therein), Government Code, Labor Code, Civil Code, Business & Professions Code, as they apply to contracts with local public agencies, as defined in said codes. No provision of the Standard Specifications or these Special Provisions shall be construed as an election under Public Contract Code section 20396 to have this project performed under the provisions of the State Contract Act. Individual provisions of the State Contract Act shall apply only as specifically referenced in these specifications or Special Provisions.

State Highway Engineer – The County Engineer of the County of Tehama, State of California

Transportation Building – Sacramento – Department of Public Works, County of Tehama State of California.

Add to section 1-1.07B:

Contract time: Number of original working days as adjusted by any time adjustment.

Disadvantaged Business Enterprise: Disadvantaged Business Enterprise as defined in 49 CFR 26.5.

END OF SECTION

SECTION 2 BIDDING

The bidder's attention is directed to the provisions in Section 2, "Bidding" of the Standard Specifications and these Special Provisions for the requirements and conditions which the bidder must observe in the preparation of and the submission of the bid.

2.A BID DOCUMENTS

2.A-1 GENERAL

The first four paragraphs of Section 2-1.06A of the Standard Specifications shall not apply.

Sections 2-1.18 through 2-1.27 of the Standard Specifications shall not apply.

Examine the job site and bid documents. Notify the Department of apparent errors and patent ambiguities in the plans, specifications, and Bid Item List. Failure to do so may result in rejection of a bid or rescission of an award.

Bid submission is your acknowledgment that you have examined the job site and bid documents and are satisfied with:

1. General and local conditions to be encountered
2. Character, quality, and scope of work to be performed
3. Quantities of materials to be furnished
4. Character, quality, and quantity of surface and subsurface materials or obstacles
5. Requirements of the contract

Bids must be submitted on forms included in the Bid Book. Bid documents can be examined at area Builder's Exchanges. Documents are available for download on CIP List (www.CIPLIST.com).

Copies are on file and open to public inspection or may be obtained for a NONREFUNDABLE FEE of $50.00 PER SET including ½ size formatted 11x17 paper, (full size individual sheets are available at a cost of $3.50 per sheet) at Tehama County Public Works, 9380 San Benito Avenue, Gerber, CA 96035.

The Bid Documents must be bound in a book together with the Notice to Bidders, Special Provisions, and contract. The project plans are a separate attachment. **Neither the Bid form nor any other portion of said book shall be detached therefrom.** This includes all DBE related bid forms. **An entire bound Bid Book shall be submitted at the time of bid opening.**

2.B DISADVANTAGED BUSINESS ENTERPRISES

The provisions of Section 2-1.12 "Disadvantaged Business Enterprise" of the Standard Specifications shall be changed to read as follows:

Under 49 CFR 26.13(b):

> The contractor, subrecipient or subcontractor shall not discriminate on the basis of race, color, national origin, or sex in the performance of this contract. The contractor shall carry out applicable requirements of 49 CFR part 26 in the award and administration of DOT-assisted contracts. Failure by the contractor to carry out these requirements is a material breach of this contract, which may result in the termination of this contract or such other remedy as the recipient deems appropriate.

Take necessary and reasonable steps to ensure that DBEs have opportunity to participate in the contract (49 CFR 26).

To ensure equal participation of DBEs provided in 49 CFR 26.5, the Agency shows a goal for DBEs.

Make work available to DBEs and select work parts consistent with available DBE subcontractors and suppliers.

Meet the DBE goal shown elsewhere in these special provisions or demonstrate that you made adequate good faith efforts to meet this goal.

It is your responsibility to verify that the DBE firm is certified as DBE at date of bid opening. For a list of DBEs certified by the California Unified Certification Program, go to: http://www.dot.ca.gov/hq/bep/find_certified.htm.

Determine that selected DBEs perform a commercially useful function for the type of work the DBE will perform on the Contract as provided in 49 CFR 26.55(c)(1)–(4). Under 49 CFR 26.55(c)(1)–(4), the DBE must be responsible for

the execution of a distinct element of work and must carry out its responsibility by actually performing, managing, and supervising the work.

All DBE participation will count toward the California Department of Transportation's federally mandated statewide overall DBE goal.

Credit for materials or supplies you purchase from DBEs counts towards the goal in the following manner:

- 100 percent counts if the materials or supplies are obtained from a DBE manufacturer.
- 60 percent counts if the materials or supplies are obtained from a DBE regular dealer.
- Only fees, commissions, and charges for assistance in the procurement and delivery of materials or supplies count if obtained from a DBE that is neither a manufacturer nor regular dealer. 49 CFR 26.55 defines "manufacturer" and "regular dealer."

You receive credit toward the goal if you employ a DBE trucking company that is performing a commercially useful function. The Department uses the following factors in determining whether a DBE trucking company is performing a commercially useful function:

- The DBE must be responsible for the management and supervision of the entire trucking operation for which it is responsible on a particular contract, and there cannot be a contrived arrangement for the purpose of meeting DBE goals.
- The DBE must itself own and operate at least one fully licensed, insured, and operational truck used on the contract.
- The DBE receives credit for the total value of the transportation services it provides on the Contract using trucks it owns, insures, and operates using drivers it employs.
- The DBE may lease trucks from another DBE firm, including an owner-operator who is certified as a DBE. The DBE who leases trucks from another DBE receives credit for the total value of the transportation services the lessee DBE provides on the Contract.
- The DBE may lease trucks without drivers from a non-DBE truck leasing company. If the DBE leases trucks from a non-DBE truck leasing company and uses its own employees as drivers, it is entitled to credit for the total value of these hauling services.
- A lease must indicate that the DBE has exclusive use of and control over the truck. This does not preclude the leased truck from working for others during the term of the lease with the consent of the DBE, so long as the lease gives the DBE absolute priority for use of the leased truck. Leased trucks must display the name and identification number of the DBE.

[49 Fed Reg 59595 (10/2/14) (to be codified at 49 CFR 26.55(d)]

2.B-1 DBE COMMITMENT SUBMITTAL

Submit the Exhibit 15-G *Local Agency Bidder DBE Commitment (Construction Contracts)* form, included in the contract portion of the Bid book. If Exhibit 15-G is not submitted at the time of bid, make a copy of the form before submitting your bid. Forms shall not be removed.

If the DBE Commitment form is not submitted with the bid, the apparent low bidder, the 2nd low bidder, and the 3rd low bidder must complete and submit the DBE Commitment form to the Agency. DBE Commitment form must be received by the Agency no later than 4:00 p.m. on the **4th business** day after bid opening.

Other bidders do not need to submit the DBE Commitment form unless the Agency requests it. If the Agency requests you to submit a DBE Commitment form, submit the completed form within 4 business days of the request.

Submit written confirmation from each DBE stating that it is participating in the contract. Include confirmation with the DBE Commitment form. A copy of a DBE's quote will serve as written confirmation that the DBE is participating in the contract.

If you do not submit the DBE Commitment form within the specified time, the Agency will find your bid nonresponsive.

2.B-2 DBE GOOD FAITH EFFORTS SUBMITTAL

You can meet the DBE requirements by either documenting commitments to DBEs to meet the Contract goal or by documenting adequate good faith efforts to meet the Contract goal. An adequate good faith effort means that the bidder must show that it took all necessary and reasonable steps to achieve a DBE goal that, by their scope, intensity, and appropriateness to the objective, could reasonably be expected to meet the DBE goal.

If you have not met the DBE goal, complete and submit the DBE Information - Good Faith Efforts, Exhibit 15-H, form with the bid showing that you made adequate good faith efforts to meet the goal. Only good faith efforts directed towards obtaining participation by DBEs will be considered. If good faith efforts documentation is not submitted at the time of bid, make a copy of the form before submitting your bid. Forms shall not be removed. DBE Good Faith Efforts forms must be received by the Agency no later than 4:00 p.m. on the **4th business** day after bid opening.

If your DBE Commitment form shows that you have met the DBE goal or if you are required to submit the DBE Commitment form, you must also submit good faith efforts documentation within the specified time to protect your eligibility for award of the contract in the event the Agency finds that the DBE goal has not been met.

Good faith efforts documentation must include the following information and supporting documents, as necessary:

1. Items of work you have made available to DBE firms. Identify those items of work you might otherwise perform with your own forces and those items that have been broken down into economically feasible units to facilitate DBE participation. For each item listed, show the dollar value and percentage of the total contract. It is your responsibility to demonstrate that sufficient work to meet the goal was made available to DBE firms.
2. Names of certified DBEs and dates on which they were solicited to bid on the project. Include the items of work offered. Describe the methods used for following up initial solicitations to determine with certainty if the DBEs were interested, and the dates of the follow-up. Attach supporting documents such as copies of letters, memos, facsimiles sent, telephone logs, telephone billing statements, and other evidence of solicitation. You are reminded to solicit certified DBEs through all reasonable and available means and provide sufficient time to allow DBEs to respond.
3. Name of selected firm and its status as a DBE for each item of work made available. Include name, address, and telephone number of each DBE that provided a quote and their price quote. If the firm selected for the item is not a DBE, provide the reasons for the selection.
4. Name and date of each publication in which you requested DBE participation for the project. Attach copies of the published advertisements.
5. Names of agencies and dates on which they were contacted to provide assistance in contacting, recruiting, and using DBE firms. If the agencies were contacted in writing, provide copies of supporting documents.
6. List of efforts made to provide interested DBEs with adequate information about the plans, specifications, and requirements of the contract to assist them in responding to a solicitation. If you have provided information, identify the name of the DBE assisted, the nature of the information provided, and date of contact. Provide copies of supporting documents, as appropriate.
7. List of efforts made to assist interested DBEs in obtaining bonding, lines of credit, insurance, necessary equipment, supplies, and materials, excluding supplies and equipment that the DBE subcontractor purchases or leases from the prime contractor or its affiliate. If such assistance is provided by you, identify the name of the DBE assisted, nature of the assistance offered, and date assistance was provided. Provide copies of supporting documents, as appropriate.
8. Any additional data to support demonstration of good faith efforts.

The Agency may consider DBE commitments of the 2nd and 3rd bidders when determining whether the low bidder made good faith efforts to meet the DBE goal.

2.B-3 DBE / NON-DBE LISTING OF SUBCONTRACTORS

Pursuant to Title 49, Section 26.11 of the Code of Federal Regulations, the Contractor must provide information on the list of subcontractors (regardless of amount of work performed). If Exhibit 12-B, included in the bid section of

the Bid Book, is not submitted at the time of bid, make a copy of the form before submitting your bid. The Contractor must submit Exhibit 12-B to the Agency no later than 4:00 PM on the 4th business day after bid opening.

2.B-4 DATA USED TO DETERMINE DBE CONTRACT GOAL

To better serve bidder's efforts to meet the DBE contract goal and conduct searches for qualified firms, the County has listed the Work Category Codes (WCC) being utilized on this project. After entering the DBE Search webpage, sorting should be done by District and WCC's only. This project is located in District 2, but search may include other Districts at the discretion of the bidder.

C1531 Plane Ashpalt Concrete
C9774 Trucker
C1201 Traffic Control System

This information is provided to help contractors with solicitation of qualified DBE firms, and in no way shall serve to limit the search effort or range of qualified DBE firms for this project. Contractors shall extend search parameters to solicit available firms if needed. For more information on how the County prepared the Contract Goal, please contact the Department.

2.C BID DOCUMENT COMPLETION

2.C-1 GENERAL

Refer to Section 2-1.33 of the Standard Specification. Section 2-1.33A "General" is changed to remove the second and third paragraphs. In accordance with Public Contract Code § 4104 (a)(2)(B), the County requires a completed subcontractor list at the bid opening. An incomplete subcontractor list results in a non-responsive bid. Submittals after the bid opening will not be accepted.

2.C-2 SUBCONTRACTORS LIST

Refer to Section 2-1.33C "Subcontractor List" of the Standard Specifications. The second paragraph is changed to read; "The subcontract list must show name, address, DIR registration number, license number and work portions to be performed by each subcontractor listed. Show work portions by bid item number, work description, portions of each respective bid item subcontracted and the dollar amount associated with each subcontractor required (value) to perform listed work.

2.C-3 REQUIRED ITEMS FOR BID

In conformance with Public Contract Code Section 7106, a Noncollusion Affidavit is included in the Bid Book. Signing the Bid Book shall also constitute signature of the Noncollusion Affidavit.

Failure of the bidder to fulfill the requirements of the Special Provisions for submittals required to be furnished after bid opening, including but not limited to escrowed bid documents, where applicable, may subject the bidder to a determination of the bidder's responsibility in the event it is the apparent low bidder on a future public works contract. Incomplete submittal of bid documents will result in a non-responsive bid. **Neither the Bid form(s) nor any other portion of said book shall be detached therefrom.** This includes all DBE related forms. The entire bound Bid Book shall be submitted at the time of bid opening.

2.D BIDDER'S SECURITY

The bidder's bond shall conform to the bond form following the Bid Signature page in this Bid Book.

2.E NON-MANDATORY PREBID MEETING

The Department will conduct a non-mandatory prebid meeting for this contract. Prebid meeting will be held on October 5, 2016 at 10:00AM. The purpose of the meeting is to:

- Describe and discuss the project
- Provide DBE firms the opportunity to meet and interact with prospective bidders and increase their participation in the performance of contracts.
- Address any bidder questions or concerns for the project, including any addenda issued or pending.

Attendance at this meeting is non-mandatory.

2.F BID OPENING

The Agency publicly opens and reads bids at the time and place shown on the *Notice to Bidders*.

2.G BID RIGGING

The U.S. Department of Transportation (DOT) provides a toll-free hotline to report bid rigging activities. Use the hotline to report bid rigging, bidder collusion, and other fraudulent activities. The hotline number is (800) 424-9071. The service is available 24 hours 7 days a week and is confidential and anonymous. The hotline is part of the DOT's effort to identify and investigate highway construction contract fraud and abuse and is operated under the direction of the DOT Inspector General.

2.H CONTRACTOR REGISTRATION

A contractor or subcontractor shall not be qualified to bid on, be listed in a bid proposal, subject to the requirements of Section 4104 of the Public Contract Code, or engage in the performance of any contract for public work, as defined in this chapter, unless currently registered and qualified to perform public work pursuant to Section 1725.5. It is not a violation of this section for an unregistered contractor to submit a bid that is authorized by Section 7029.1 of the Business and Professions Code or by Section 10164 or 20103.5 of the Public Contract Code, provided the contractor is registered to perform public work pursuant to Section 1725.5 at the time the contract is awarded.

END OF SECTION

SECTION 3 CONTRACT AWARD AND EXECUTION

3.A GENERAL

The bidder's attention is directed to the provisions in Section 3, "Contract Award and Execution" of the Standard Specifications and these Special Provisions for the requirements and conditions concerning award and execution of contract.

Sections 3-1.08 of the Standard Specifications shall not apply.

3.B CONTRACT AWARD

Refer to Section 3-1.04 "Contract Award" of the Standard Specifications. This section is amended to read:

If the Department awards the contract, the award is made to the lowest responsible bidder within 60 days after bid opening. The Department may extend the specified award period if the bidder agrees.

3.B-1 BID PROTEST

Submit any bid protest to the Engineer. Bid protests are to be delivered to the following address:

DIRECTOR OF PUBLIC WORKS
9380 SAN BENITO AVE., GERBER, CA 96035
FAX NO. 530.385.1293

3.B-1.a BID PROTEST PROCEDURE

a. The initial bid protest must be submitted in writing to the above address no later than 5PM of the 5th business day following bid opening.

   i. The initial protest shall refer to both the Contract number and the specific portion of the document which forms the basis for the protest.

   ii. The initial protest shall include the name, address, telephone number and signature of the person representing the protesting party.

   iii. The party filing the initial protest shall concurrently transmit a copy of the initial protest document and any attached documentation to all other parties with a direct financial interest which may be adversely affected by the outcome of the protest. Such parties shall include all other Bidders or proposers who appear to have a reasonable prospect of receiving an award depending upon the outcome of the protest.

b. The protesting bidder shall submit to the Department a full and complete written statement specifying the grounds for the protest no later than 5 PM of the 5th business day following the submittal of the initial protest.

c. The Department will issue a proposed decision on the protest. The final decision on any protest shall be made by the Tehama County Board of Supervisors prior to the award of the Contract. If the Board determines that a protest is frivolous, the party originating the protest may be determined to be irresponsible and that party may be determined to be ineligible for future contract awards.

d. The procedure and time limits set forth in this paragraph are mandatory and are the Bidder's sole and exclusive remedy in the event of Bid protest and failure to comply with these procedures shall constitute a failure to exhaust administrative remedies and a waiver of any right to further pursue the bid protest or otherwise challenge the bid award, including filing a Government Code Claim or legal proceedings.

3.B-2 BID EVALUATION

This project is bid as a base bid project. The contract, if awarded, will be awarded to the responsive and responsible bidder who submitted the lowest **BASE BID**.

3.C CONTRACT BONDS

The provisions of Section 3-1.05 of the Standard Specifications shall not apply.

The successful bidder shall furnish two bonds for the contract. As required under Section 9550 of the Civil Code, the successful bidder shall furnish a Payment Bond; provided that the bond shall be in the amount of one-hundred

percent (100%) of the contract price to guarantee the payment of claims of laborers, mechanics, or material men employed to work under the contract.

In addition, the bidder shall furnish a Performance Bond in the amount of one-hundred percent (100%) of the contract price to guarantee the faithful performance of the contract.

All alterations, extensions of time, extra and additional work, and other changes authorized by these specifications or any part of the contract may be made without securing the consent of the surety or sureties on the contract bonds.

Bond forms are provided with the Contract Documents.

3.D CONTRACTOR LICENSE

The Contractor must be properly licensed as a contractor from contract award through Contract acceptance (Public Contract Code § 10164).

3.E PAYEE DATA RECORD

Refer to Section 3-1.11 "Payee Data Record" of the Standard Specifications.

Replace the paragraph in section 3-1.11 with:

Complete and deliver to the Engineer a Payee Data Record when requested by the Department.

3.F DBE INFORMATION FORM

Complete and sign Exhibit 15-G Local Agency Bidder DBE Commitment (Construction Contracts) included in the contract documents regardless of whether DBE participation is reported.

Provide written confirmation from each DBE that the DBE is participating in the Contract. A copy of a DBE's quote serves as written confirmation. If a DBE is participating as a joint venture partner, the Agency encourages you to submit a copy of the joint venture agreement.

The successful bidder's Exhibit 15-G form should include the names, addresses and phone numbers of DBE firms that will participate, with a complete description of work or supplies to be provided by each, and the dollar value of each DBE transaction. When 100 percent of a contract item of work is not to be performed or furnished by a DBE, a description of the exact portion of that work to be performed or furnished by that DBE should be included in the DBE information, including the planned location of that work. A successful bidder certified as a DBE should describe the work it has committed to performing with its own forces as well as any other work that it has committed to be performed by DBE subcontractors, suppliers and trucking companies.

Exhibit 15-G shall be completed and returned to the Agency as specified in Section 2.B-1 "DBE Commitment Submittal" of these Special Provisions.

3.G FORM FHWA-1273

For a federal-aid contract, form FHWA-1273 is included with the Contract documents sent to the successful bidder for execution. Comply with its provisions. Interpret Section II "Nondiscrimination" Item 6 "Training and Promotion" as specified in Form FHWA-1273.

3.H CONTRACT EXECUTION

The provisions of Section 3-1.18, "Contract Execution" of the Standard Specifications shall be changed to read as follows:

The successful bidder must sign the *Contract* form included in the Bid Book.

After Award of the Contract by the County, the Engineer will issue a "Notice of Award", which includes applicable contract documents. Upon Receipt of the Notice of Award, deliver to the Engineer:

1. Signed Contract form, including the attached form FHWA-1273
2. Signed Subcontracting Request form per Section 5.B "Subcontracting" of these Special Provisions.
3. Contract bonds
4. Documents identified in Section 3-1.07 of the Standard Specifications, "Insurance Policies"

These contract documents must be received by the Engineer before the 10th business day after the bidder receives the contract.

Executed contract documents shall be delivered to the following address:

The bidder's security may be forfeited for failure to execute the contract within the time specified.

3.I BIDDER'S SECURITIES

The provisions of Section 3-1.19, "Bidders' Securities" of the Standard Specifications shall be changed to read as follows:

Failure of the lowest responsible bidder, the second lowest responsible bidder, or the third lowest responsible bidder to execute the contract as required in Section 3.H , "Contract Execution," within 10 business days of receiving the contract for execution shall be just cause for the forfeiture of the Bid guaranty. The successful bidder may file with the Department a written notice, signed by the bidder or the bidder's authorized representative, specifying that the bidder will refuse to execute the contract if it is presented. The filing of this notice shall have the same force and effect as the failure of the bidder to execute the contract and furnish acceptable bonds within the time specified.

END OF SECTION

SECTION 4 SCOPE OF WORK

4.A GENERAL

The bidder's attention is directed to the provisions in Section 4, "Scope of Work" of the Standard Specifications and these Special Provisions for the requirements and conditions concerning scope of work.

4.B LOCATION OF WORK

Locations Throughout Tehama County, California

4.C DESCRIPTION OF WORK

Bridge maintenance activities, on 13 structures throughout Tehama County including: cleaning bridge deck surfaces, applying methacrylate polymer sealant, and polyester concrete overlay, removing of asphalt surfacing, replacing joint seals and assemblies, reconstructing approach slabs, and placing pavement markings, and striping.

4.D CONTRACT DOCUMENTS PROVIDED TO CONTRACTOR

The Engineer will furnish to the Contractor, upon request and free of charge, three copies of Contract Documents. Additional copies of Contract Documents or Plans may be obtained upon request by paying appropriate costs for reproduction.

4.E CHANGE ORDERS - GENERAL

The provisions of Section 4-1.05A, “General” of the Standard Specifications shall be changed to read as follows:

The Department may make changes within the scope of work and add extra work, subject to the limitations of Section 20395, subdivision (d) of the Public Contract Code. The Engineer describes the changes and extra work, the payment basis, and any time adjustment in a Change Order.

A Change Order is approved when the Department signs the Change Order.

Until the Department approves a Change Order, continue to perform the work under the Contract. If ordered in writing by the Engineer, you shall proceed with the work so ordered prior to actual receipt of an approved contract change order therefor. In those cases, the Engineer will, as soon as practicable, issue an approved contract change order for the ordered work.

Submit detailed cost data for a unit price adjustment for a bid item if:

1. the Engineer requests the data or,
2. you request a unit price adjustment resulting from a change of more than 25 percent in the bid item's quantity.

Refer to Section 5-1.27E, “Change Order Bills”.

4.F WORK CHARACTER CHANGES

The provisions of Section 4-1.05B, “Work Character Changes” of the Standard Specifications shall be changed to read as follows:

The Department <u>may, in its sole discretion, issue a Change Order to adjust</u> the unit price for an item if:

1. An ordered plan or specification change materially changes the character of a work item from that on which the bid price was based<u>; and</u>
2. The unit cost of the changed item differs when compared to the unit cost of that item under the original plans and specifications.

4.G DIFFERING SITE CONDITIONS

The provisions of Section 4-1.06, “Differing Site Conditions” of the Standard Specifications shall be changed to read as follows:

4.G-1 DIFFERING SITE CONDITIONS

1. During the progress of the work, if subsurface or latent physical conditions are encountered at the site differing materially from those indicated in the contract or if unknown physical conditions of an unusual nature, differing materially from those ordinarily encountered and generally recognized as inherent in the work provided for in the contract, are encountered at the site, the party discovering such conditions shall promptly notify the other party in writing of the specific differing conditions before the site is disturbed and before the affected work is performed.
2. Upon written notification, the engineer will investigate the conditions, and if it is determined that the conditions materially differ and cause an increase or decrease in the cost or time required for the performance of any work under the contract, an adjustment, excluding anticipated profits, will be made and the contract modified in writing accordingly. The engineer will notify the contractor of the determination whether or not an adjustment of the contract is warranted.
3. No contract adjustment which results in a benefit to the contractor will be allowed unless the contractor has provided the required written notice.
4. No contract adjustment will be allowed under this clause for any effects caused on unchanged work. (This provision may be omitted by the Local Agency, at their option.)

4.G-2 SUBSURFACE CONDITIONS

In the event the work hereunder requires digging trenches or excavation deeper than four (4) feet, the Contractor shall promptly, and before the following conditions are disturbed, notify the Department by written notice of:

1. Material that the Contractor believes may be material that is hazardous waste, as defined in Section 25117 of the Health and Safety Code, that is required to be removed to a Class I, Class II, or Class III disposal site in accordance with provisions of existing law.
2. Subsurface or latent physical conditions at the site differing from those indicated.
3. Unknown physical conditions at the site of an unusual nature, different materially from those ordinarily encountered and generally recognized as inherent in work of the character provided for in this contract.

Upon such notification, the Department shall promptly investigate the conditions, and if it finds that the conditions do materially so differ, or do involve hazardous waste, and cause a decrease or increase in the Contractor's cost of, or the time required for performance of any part of the work, shall issue a change order under the procedures described in the Standard Specifications and these Special Provisions.

In the event that a dispute arises between the Department and the Contractor whether the conditions do materially so differ, or involve hazardous waste, or cause a decrease or increase in the Contractor's cost of, or time required for, performance of any part of the work, the Contractor shall not be excused from any scheduled completion date provided for by this contract, but shall proceed with all work to be performed under this Contract. Contractor shall retain any and all rights provided either by contract or by law, which pertain to the resolution of disputes and protests between the contracting parties.

4.G-3 SIGNIFICANT CHANGES IN THE CHARACTER OF WORK

4. The engineer reserves the right to make, in writing, at any time during the work, such changes in quantities and such alterations in the work as are necessary to satisfactorily complete the project. Such changes in quantities and alterations shall not invalidate the contract nor release the surety, and the contractor agrees to perform the work as altered.
5. If the alterations or changes in quantities significantly change the character of the work under the contract, whether such alterations or changes are in themselves significant changes to the character of the work or by affecting other work cause such other work to become significantly different in character, an adjustment, excluding anticipated profit, will be made to the contract. The basis for the adjustment shall be agreed upon prior to the performance of the work. If a basis cannot be agreed upon, then an adjustment will be made either for or against the contractor in such amount as the engineer may determine to be fair and equitable.
6. If the alterations or changes in quantities do not significantly change the character of the work to be performed under the contract, the altered work will be paid for as provided elsewhere in the contract.
7. The term "significant change" shall be construed to apply only to the following circumstances:
    - When the character of the work as altered differs materially in kind or nature from that involved or included in the original proposed construction; or

- When a major item of work, as defined elsewhere in the contract, is increased in excess of 125 percent or decreased below 75 percent of the original contract quantity. Any allowance for an increase in quantity shall apply only to that portion in excess of 125 percent of original contract item quantity, or in case of a decrease below 75 percent, to the actual amount of work performed.

4.G-4 CONTRACTOR'S NOTIFICATION

With respect to differing site conditions, other than those to which Section 0 applies, the following procedures shall apply:

Promptly notify the Engineer if you find either of the following conditions:

1. Physical conditions differing materially from either of the following:
   - Contract documents
   - Job site examination
2. Physical conditions of an unusual nature, differing materially from those ordinarily encountered and generally recognized as inherent in the work provided for in the Contract

Include details explaining the information you relied on and the material differences you discovered.

If you fail to promptly notify the Engineer, you waive the differing site condition claim for the period between your discovery of the differing site condition and your notification to the Engineer.

If you disturb the site after discovery and before the Engineer's investigation, you waive the differing site condition claim.

4.G-5 ENGINEER'S INVESTIGATION AND DECISION

Upon your notification, the Engineer investigates job site conditions and:

1. Notifies you whether to resume affected work
2. Decides whether the condition differs materially and is cause for an adjustment of time, payment, or both.

END OF SECTION

SECTION 5 CONTROL OF WORK

5.A GENERAL

The bidder's attention is directed to the provisions in Section 5"Control of Work" of the Standard Specifications and these Special Provisions.

5.B SUBCONTRACTING

Refer to Section 5-1.13 "Subcontracting" of the Standard Specifications and these Special Provisions.

Replace the 2nd paragraph of Section 5-1.13A of the Standard Specifications with:

The Subcontracting Request form (Exhibit 16-B/CEM-1201) shall be submitted in accordance with Section 3.H "Contract Execution" of these Special Provisions.

STATE OF CALIFORNIA - DEPARTMENT OF TRANSPORTATION FRONT

SUBCONTRACTING REQUEST

DC-CEM-1201 (REV. 4/94) (OLD HC-45) CT# 7541-3514-7

See Instructions On Back

		REQUEST NUMBER
CONTRACTOR NAME	**COUNTY**	**ROUTE**
BUSINESS ADDRESS	**CONTRACT NO.**	
CITY/STATE / **ZIP CODE**	**FEDERAL AID PROJECT NO. (From Special Provisions)**	

SUBCONTRACTOR (Name, Business Address, Phone)	BID ITEM NUMBER(S)	% OF BID ITEM SUBBED	CHECK IF: (See Categories Below) (1)	(2)	(3)	DESCRIBE WORK WHEN LESS THAN 100% OF WORK IS SUBBED	$ AMOUNT BASED ON BID $ AMOUNT

Categories: 1) Specialty 2) Listed Under Fair Practices Act 3) Certified DBE/MBE/WBE/DVBE

I Certify That:

- The Standard Provisions for labor set forth in the contract apply to the subcontracted work.
- If applicable, (Federal Aid Projects only) FHWA FORM 1273 (Federal Requirements) has been inserted in the subcontracts and shall be incorporated in any lower-tier subcontract. Written contracts have been executed for the above noted subcontracted work.

CONTRACTOR'S SIGNATURE	**DATE**

NOTE: This section is to be completed by the Resident Engineer

1. Total of bid items ..... $ _____
2. Specialty items (previously requested) ..... $ _____
3. Specialty items (this request) ..... $ _____
4. Total (lines 2+3) ..... $ _____
5. Contractor must perform with own forces (lines 1 minus 4) x_____% ..... $ _____
6. Bid items previously subcontracted ..... $ _____
7. Bid items subcontracted (this request) ..... $ _____
8. Total (lines 6+7) ..... $ _____
9. Balance of work Contractor to perform (lines 1 minus 8) ..... $ _____ $ _____

APPROVED	
RESIDENT ENGINEER'S SIGNATURE	DATE

CEM-1201 (HC-46 REV. 4/94) COPY DISTRIBUTION: 1. Original - Contractor 2. Copy - local agency Resident Engineer 3. Copy - local agency Labor Compliance Officer 4. Contractor's Information Copy

INSTRUCTIONS FOR COMPLETING SUBCONTRACTING REQUEST FORM

All First-tier subcontractors must be included on a subcontracting request.

Submit in accordance with Section 8-1.01 of the *Caltrans Standard Specifications*. Type or print requested information. Information copy is to be retained by the contractor. Submit other copies to project's Resident Engineer. After approval, the original will be returned to the contractor.

When an entire item is subcontracted, the value to be shown is the contractor's bid price.

When a portion of an item is subcontracted, describe the portion, and show the % of bid

item
and value.

THIS FORM IS NOT TO BE USED FOR SUBSTITUTIONS.

Prior to submittal of Form CEM-1201 involving a replacement Subcontractor, submit a separate written request for approval to substitute a listed subcontractor. Section 4107 of the Government Code covers the conditions for substitution.

Submit a separate written request for approval of any DBE/MBE/WBE/DVBE substitution. Include appropriate backup information and state what efforts were made to accomplish the same dollar value of work by other certified DBE/MBE/WBE/DVBEs.

NOTE: For contractors who will be performing work on railroad property, it is necessary for the contractor to complete and submit the Certificate of Insurance (State Form DH-OS-A10A) naming the subcontractor as insured. *No work shall be allowed which involves encroachment on railroad property until the specified insurance has been approved.*

Replace the 8th paragraph of section 5-1.13A of the Standard Specifications with:

Each subcontractor must have an active and valid:

1. State contractor license with a classification appropriate for the work to be performed (Bus & Prof Code § 7000 et seq.)
2. Public works contractor registration number with the Department of Industrial Relations

5.B-1 SUBCONTRACTOR AND DISADVANTAGED BUSINESS ENTERPRISE RECORDS

The provisions of Section 5.13B "Disadvantaged Business Enterprise" of the Standard Specifications shall be changed to read as follows:

Use each DBE subcontractor as listed on Exhibit 12-B *Bidder's List of Subcontractors (DBE and Non-DBE)* and Exhibit 15-G *Local Agency Bidder DBE Commitment* (included in the bid section of the Bid Book) unless you receive authorization for a substitution.

The Agency requests the Contractor to:

1. Notify the Engineer of any changes to its anticipated DBE participation
2. Provide this notification before starting the affected work
3. Maintain records including:
   - Name and business address of each 1st-tier subcontractor
   - Name and business address of each DBE subcontractor, DBE vendor, and DBE trucking company, regardless of tier
   - Date of payment and total amount paid to each business

If you are a DBE contractor, include the date of work performed by your own forces and the corresponding value of the work.

Before the 15th of each month, submit a Monthly DBE Trucking Verification form.

If a DBE is decertified before completing its work, the DBE must notify you in writing of the decertification date. If a business becomes a certified DBE before completing its work, the business must notify you in writing of the certification date. Submit the notifications. On work completion, complete a Disadvantaged Business Enterprises (DBE) Certification Status Change, Exhibit 17-O form. **Submit the form within 30 days of contract acceptance.**

Upon work completion, complete Exhibit 17-F *Final Report – Utilization of Disadvantaged Business Enterprises (DBE), First-Tier Subcontractors.* **Submit it within 30 days of contract acceptance.** The Agency will withhold $10,000 until the form is submitted. The Agency releases the withhold upon submission of the completed form.

5.B-1.a PERFORMANCE OF DISADVANTAGED BUSINESS ENTERPRISES

DBEs must perform work or supply materials as listed in the Exhibit 15-G *Local Agency Bidder DBE Commitment (Construction Contracts)* form, included in the bid section of the Bid Book.

Do not terminate or substitute a listed DBE for convenience and perform the work with your own forces or obtain materials from other sources without authorization from the Agency.

The Agency authorizes a request to use other forces or sources of materials if it shows any of the following justifications:

1. Listed DBE fails or refuses to execute a written contract based on plans and specifications for the project.
2. You stipulated that a bond is a condition of executing the subcontract and the listed DBE fails to meet your bond requirements.
3. Work requires a contractor's license and listed DBE does not have a valid license under Contractors License Law.
4. Listed DBE fails or refuses to perform the work or furnish the listed materials.

5. Listed DBE's work is unsatisfactory and not in compliance with the contract.
6. Listed DBE is ineligible to work on the project because of suspension or debarment.
7. Listed DBE becomes bankrupt or insolvent.
8. Listed DBE voluntarily withdraws with written notice from the Contract
9. Listed DBE is ineligible to receive credit for the type of work required.
10. Listed DBE owner dies or becomes disabled resulting in the inability to perform the work on the Contract.
11. Agency determines other documented good cause.

Notify the original DBE of your intent to use other forces or material sources and provide the reasons. Provide the DBE with 5 days to respond to your notice and advise you and the Agency of the reasons why the use of other forces or sources of materials should not occur. Your request to use other forces or material sources must include:

1. One or more of the reasons listed in the preceding paragraph
2. Notices from you to the DBE regarding the request
3. Notices from the DBEs to you regarding the request

If a listed DBE is terminated or substituted, you must make good faith efforts to find another DBE to substitute for the original DBE. The substitute DBE must perform at least the same amount of work as the original DBE under the contract to the extent needed to meet the DBE goal.

The substitute DBE must be certified as a DBE at the time of request for substitution.

Unless the Agency authorizes (1) a request to use other forces or sources of materials or (2) a good faith effort for a substitution of a terminated DBE, the Agency does not pay for work listed on the Exhibit 15-G *Local Agency Bidder DBE Commitment (Construction Contracts)* form unless it is performed or supplied by the listed DBE or an authorized substitute.

5.B-1.b DISADVANTAGED BUSINESS ENTERPRISES (DBE) CERTIFICATION STATUS CHANGE, EXHIBIT 17-O

1. Local Agency Contract Number	2. Federal-Aid Project Number	3. Local Agency	4. Contract Completion Date

5. Contractor/Consultant	6. Business Address	7. Final Contract Amount

8. Contract Item Number	9. DBE Contact Information	10. DBE Certification Number	11. Amount Paid While Certified	12. Certification/ Decertification Date (Letter Attached)	13. Comments

If there were no changes in the DBE certification of subcontractors/subconsultants, indicate on the form.

I CERTIFY THAT THE ABOVE INFORMATION IS COMPLETE AND CORRECT			
14. Contractor/Consultant Representative's Signature	15. Contractor/Consultant Representative's Name	16. Phone	17. Date
I CERTIFY THAT THE CONTRACTING RECORDS AND ON-SITE PERFORMANCE OF THE DBE(S) HAS BEEN MONITORED			
18. Local Agency Representative's Signature	19. Local Agency Representative's Name	20. Phone	21. Date

DISTRIBUTION: Original – Local Agency, Copy – Caltrans District Local Assistance Engineer. Include with Final Report of Expenditures

ADA NOTICE: For individuals with sensory disabilities, this document is available in alternate formats. For information, call (916) 445-1233, Local Assistance Procedures Manual TTY 711, or write to Records and Forms Management, 1120 N Street, MS-89, Sacramento, CA 95814.

INSTRUCTIONS –DISADVANTAGED BUSINESS ENTERPRISES (DBE) CERTIFICATION STATUS CHANGE

1. Local Agency Contract Number - Enter the Local Agency contract number or identifier.

2. Federal-Aid Project Number - Enter the Federal-Aid Project Number.

3. Local Agency - Enter the name of the local or regional agency that is funding the contract.

4. Contract Completion Date - Enter the date the contract was completed.

5. Contractor/Consultant - Enter the contractor/consultant's firm name.

6. Business Address - Enter the contractor/consultant's business address.

7. Final Contract Amount - Enter the total final amount for the contract.

8. Contract Item Number - Enter contract item for work, services, or materials supplied provided. Not applicable for consultant contracts.

9. DBE Contact Information - Enter the name, address, and phone number of all DBE subcontracted contractors/consultants.

10. DBE Certification Number - Enter the DBE's Certification Identification Number.

11. Amount Paid While Certified - Enter the actual dollar value of the work performed by those subcontractors/subconsultants during the time period they are certified as a DBE.

12. Certification/Decertification Date (Letter Attached) - Enter either the date of the Decertification Letter sent out by the Office of Business and Economic Opportunity (OBEO) or the date of the Certification Certificate mailed out by OBEO.

13. Comments - If needed, provide any additional information in this section regarding any of the above certification status changes.

14. Contractor/Consultant Representative's Signature - The person completing the form on behalf of the contractor/consultant's firm must sign their name.

15. Contractor/Consultant Representative's Name - Enter the name of the person preparing and signing the form.

16. Phone - Enter the area code and telephone number of the person signing the form.

17. Date - Enter the date the form is signed by the contractor's preparer.

18. Local Agency Representative's Signature - A Local Agency Representative must sign their name to certify

that the contracting records and on-site performance of the DBE(s) has been monitored.

19. Local Agency Representative's Name - Enter the name of the Local Agency Representative signing the form.

20. Phone - Enter the area code and telephone number of the person signing the form.

21. Date - Enter the date the form is signed by the Local Agency Representative.

FINAL REPORT - UTILIZATION OF DISADVANTAGED BUSINESSES EXHIBIT 17-F

1. Local Agency Contract Number	2. Federal-Aid Project Number	3. Local Agency	4. Contract Completion Date

5. Contractor/Consultant	6. Business Address	7. Final Contract Amount

8. Contract Item Number	9. Description of Work, Service, or Materials Supplied	10. Company Name and Business Address	11. DBE Certification Number	12. Contract Payments		13. Date Work Completed	14. Date of Final Payment
				Non-DBE	DBE		
15. ORIGINAL DBE COMMITMENT AMOUNT $			16. TOTAL				

List all first-tier subcontractors/subconsultants and DBEs regardless of tier whether or not the firms were originally listed for goal credit. If actual DBE utilization (or item of work) was different than that approved at the time of award, provide comments on an additional page. List actual amount paid to each entity. If no subcontractors/subconsultants were used on the contract, indicate on the form.

I CERTIFY THAT THE ABOVE INFORMATION IS COMPLETE AND CORRECT			
17. Contractor/Consultant Representative's Signature	18. Contractor/Consultant Representative's Name	19. Phone	20. Date
I CERTIFY THAT THE CONTRACTING RECORDS AND ON-SITE PERFORMANCE OF THE DBE(S) HAS BEEN MONITORED			
21. Local Agency Representative's Signature	22. Local Agency Representative's Name	23. Phone	24. Date

DISTRIBUTION: Original – Local Agency, Copy – Caltrans District Local Assistance Engineer. Include with Final Report of Expenditures

7/23/2015

ADA NOTICE: For individuals with sensory disabilities, this document is available in alternate formats. For information, call (916) 445-1233, Local Assistance Procedures Manual TTY 711, or write to Records and Forms Management, 1120 N Street, MS-89, Sacramento, CA 95814.

FINAL REPORT – UTILIZATION OF DISADVANTAGED BUSINESS ENTERPRISES (DBE), FIRST-TIER SUBCONTRACTORS

CEM 2402(F) (Rev. 07/2012-By County)

The form requires specific information regarding the construction project: Contract Number, County, Route, Post Miles, Federal-aid Project No., the Administering Agency, the Contract Completion Date and the Estimated Contract Amount. It requires the prime contractor name and business address. The focus of the form is to describe who did what by contract item number and descriptions, asking for specific dollar values of item work completed broken down by subcontractors who performed the work both DBE and non-DBE work forces. DBE prime contractors are required to show the date of work performed by their own forces along with the corresponding dollar value of work.

The form has a column to enter the Contract Item No. (or Item No's) and description of work performed or materials provided, as well as a column for the subcontractor name and business address. For those firms who are DBE, there is a column to enter their DBE Certification Number. The DBE should provide their certification number to the contractor and notify the contractor in writing with the date of the decertification if their status should change during the course of the project.

The form has two columns for the dollar value to be entered for the item work performed by the subcontractor.

- The Non-DBE column is used to enter the dollar value of work performed for firms who are not certified DBE.
- The DBE column is used to enter the dollar value of work performed for firms who are certified DBE. This program status is determined by the California Unified Certification Program by ethnicity, gender, ownership, and control issues at time of certification. To confirm the certification status and program status, access the Department of Transportation Civil Rights web site at: http://www.dot.ca.gov/hq/bep or by calling (916) 324-1700 or the toll free number at (888) 810-6346.

If a contractor performing work as a DBE on the project becomes decertified and still performs work after their decertification date, enter the total dollar value performed by this contractor under the appropriate DBE identification column.

If a contractor performing work as a non-DBE on the project becomes certified as a DBE, enter the dollar value of all work performed after certification as a DBE under the appropriate identification column.

Enter the total of each of the six columns in Form CEM-2402(F).

Any changes to DBE certification must also be submitted on Form-CEM 2403(F).

Enter the Date Work Completed as well as the Date of Final Payment (the date when the prime contractor made the "final payment" to the subcontractor for the portion of work listed as being completed).

The contractor and the resident engineer sign and date the form indicating that the information provided is complete and correct.

5.B-1.d MONTHLY DBE TRUCKING VERIFICATION

Per Section 5-1.13B(1) of the Standard Provisions, the Monthly DBE Trucking Verification form may be found online at http://www.dot.ca.gov/hq/construc/forms/CEM2404F.pdf.

Sections 5-1.13C and 5-1.13D of the Standard Specifications shall not apply and are deleted.

5.C PERMITS, LICENSES, AGREEMENTS, AND CERTIFICATIONS - AFTER AWARD

The provisions of Section 5-1.20B(3), "After Award" of the Standard Specifications shall be changed to read as follows:

Confirm with the Engineer which after-award PLACs are obtained by the Department and which are obtained by the Contractor. Unless otherwise specified by the Engineer in writing, all after-award PLACs are to be obtained by the Contractor.

To make a change to an after-award PLAC obtained by the Department, submit the proposed change. The Department sends the proposed change to the appropriate authority for consideration.

Obtain those PLACs to be issued to you and pay fees and costs associated with obtaining them. Submit copies of Contractor-obtained after-award PLACs for review.

5.D SUBMITTALS

Refer to Section 5-1.23 "Submittals" of the Standard Specifications.

Add between the 2nd and 3rd paragraphs of section 5-1.23A:

Submit action and informational submittals to the Engineer.

Add between the 5th and 6th paragraphs of section 5-1.23B(1)

For a revised submittal, allow the same number of days for review as for the original submittal.

Delete the 1st sentence in the 10th paragraph of section 5-1.23B(2).

5.E RECORDS

Section 5-1.27E "Change Order Bills" of the Standard Specifications is amended to delete any reference to on-line or "internet change order billing system". Change order bills shall be submitted hard copy and shall adhere to Section 5-1.23 "Submittals" of the Standard Specifications.

5.F CONSTRUCTION LIMITS

The Contractor shall confine his operations to designated property, road rights-of-way, existing easements, or as identified and designated on the Plans. Any encroachment onto lands outside of these aforementioned areas will require the contractor to supply, in writing, an agreement which shows a right-of-entry, temporary construction easement, proof of ownership or other form of right to use such land(s) PRIOR to the encroachment or use of such lands. Contractor shall also acknowledge, understand and comply with the limitations of activities relating to the approved CEQA and NEPA environmental documents which may limit scope of impacts. Failure to comply with the provisions for construction limits shall result in the immediate suspension of all work until the provisions have been met.

5.G PROPERTY AND FACILITIES PRESERVATION

Refer to Section 5-1.36 "Property and Facilities Preservation" of the Standard Specifications.

Add to the list in the 1st paragraph of section 5-1.36A:

10. Survey monuments

Add to section 5-1.36C:

If the Contract does not include an agreement with a railroad company, do not allow personnel or equipment on railroad property.

Prevent material, equipment, and debris from falling onto railroad property.

Add to section 5-1.36:

5-1.36E Survey Monuments

Protect survey monuments on and off the highway. Upon discovery of a survey monument not identified and located immediately:

1. Stop work near the monument
2. Notify the Engineer

Do not resume work near the monument until authorized.

5.H VANDALISM

The Contractor is responsible for the protection of the entire jobsite, including protecting the fresh concrete against vandalism and damage. Any damaged concrete will be repaired or replaced as determined by the

Engineer. Any additional security measures required to protect against vandalism will be included in the respective individual items and no additional compensation will be allowed.

Full compensation for vandalism control shall be considered as included in the contract price paid for the various items of work and no additional compensation will be allowed therefor.

5.I POTENTIAL CLAIMS AND DISPUTE RESOLUTION

Refer to Section 5-1.43 "Potential Claims and Dispute Resolution" of the Standard Specifications.

Section 5-1.43(E) "Alternative Dispute Resolution" of the Standard Specifications is deleted and shall be replaced as follows:

5.I-1 ALTERNATIVE DISPUTE RESOLUTION

Section 5-1.43E(2) "Dispute Resolution Advisor" and 5-1.43E(3) "Dispute Resolution Board" of the Standard Specifications shall be modified as follows:

5.I-1.a GENERAL

Section 5.I-1, Alternative Dispute Resolution," applies to a contract with 100 or more working days unless a contract has a total bid less than $3 million. Projects with total bids less than $3 million do not have the working day constraint.

In the Dispute Resolution Advisor Agreement and in the Dispute Review Board Agreement, interpret a reference to the Special Provisions as a reference to the Standard Specifications. In the Dispute Review Board Agreement, replace "Proposal and Contract" with "Bid Book." Where the section title does not match the section number for a reference, refer to the referenced title.

5.I-1.b DISPUTE RESOLUTION LADDER

Section 5.I-1.b, "Dispute Resolution Ladder," applies to a contract under $3 million.

5.I-1.b(i) General

The dispute resolution ladder, hereinafter referred to as "DRL," is an optional process.

At the preconstruction conference, at the kick-off partnering workshop, or at any time before contract acceptance, the Department offers you the option to use a dispute resolution ladder for alternative dispute resolution.

5.I-1.b(ii) Selection Process and Operation

If you wish to use this process, submit names, titles, and contact information of your personnel corresponding to the levels of the Department's dispute resolution ladder. The Department's dispute resolution ladder, in ascending order is:

Field Level - Inspector
Level 1 - Resident Engineer
Level 2 - Area Construction Engineer
Level 3 - Area Construction Manager, Office Chief, or Deputy District Director of Construction, as designated by the Deputy District Director of Construction.

A dispute can be advanced up the ladder:

1) When agreement between personnel on a defined level cannot be reached within the specified time;
2) Upon agreement of personnel on a defined level and concurrence of the personnel at the next higher level.

A dispute must be elevated to Level 1 if agreement has not been reached within a day after the event that led to the dispute. A dispute must be elevated to Level 2 if agreement has not been reached within 5 days after the Engineer's response to an RFI or within 5 business days from the date when a dispute arises due to an act or failure to act by the Engineer. A dispute must be elevated to Level 3 if agreement has not been reached within 15 days after submittal of the Initial Potential Claim Record. If a dispute remains unresolved after Level 3 participation, continue to comply with Section 5-1.146, "Potential Claims and Dispute Resolution."

5.I-1.b(iii) Compensation

The Department does not pay Contractor costs for participating in the DRL process.

5.I-1.b(iv) Dispute Resolution Ladder Agreement

The "Dispute Resolution Ladder Agreement" to be executed by the Contractor and State shall be in substantially the following form:

CEM-6208 (NEW 5/2011)

DISPUTE RESOLUTION LADDER ESTABLISHMENT

Instructions- Use of this form is *optional*. The resident engineer and the contractor may fill it out to establish the Dispute Resolution Ladder. Use of the Dispute Resolution Ladder is not a substitute for filing a Request for Information or complying with the contractual requirements for potential claims and dispute resolution.

Agreement Date:_____

Project Description: Bridge maintenance activities, on 13 structures throughout Tehama County including: cleaning bridge deck surfaces, applying methacrylate polymer sealant, and polyester concrete overlay, removing of asphalt surfacing, replacing joint seals and assemblies, reconstructing approach slabs, and placing pavement markings, and striping.

Department Personal

Level	Name	Title	Phone/Email	Time allowed Before Elevating
Field		Inspector		One business day
1		Resident Engineer		Within 5 business days after resident engineer's response to the Request for Information or within 5 business days from the date when the dispute first arose.
2		Area Construction Engineer		Within 15 days of contractor's Initial Potential Claim Record
3		Area Construction Manager, Office Chief, or Deputy District Director		Final Dispute Resolution Ladder level

Contractor Personal

Level	Name	Title	Phone/Email	Time allowed Before Elevating
Field				One business day
1				Within 5 business days after resident engineer's response to the Request for Information or within 5 business days from the date when the dispute first arose.
2				Within 15 days of contractor's Initial Potential Claim Record
3				Final Dispute Resolution Ladder level

5.I-1.c DISPUTE RESOLUTION ADVISOR

Section 5.I-1.c, “Dispute Resolution Advisor” applies to a contract from $3 million to $10 million.

5.I-1.c(i) General

A dispute resolution advisor, hereinafter referred to as "DRA", is chosen by the Department and the Contractor to assist in the resolution of disputes. The DRA is a part of the contract administrative claims process as specified in the provisions in Section 5-1.43A-D, of the Standard Specifications. The DRA shall not serve as a substitute for filing a protest or a notice of potential claim.

The DRA shall be established by the Department and the Contractor within 30 days of contract approval. The Department and the Contractor shall each propose 3 potential DRA candidates. Each potential

candidate shall provide the Department and the Contractor with their disclosure statement. The disclosure statement shall include a resume of the potential candidate's experience and a declaration statement describing past, present, anticipated, and planned relationships with all parties involved in this contract.

5.I-1.c(ii) Selection Process, Replacement of DRA Member and Operation

The Department and the Contractor shall select one of the 6 nominees to be the DRA. If the Department and the Contractor cannot agree on one candidate, the Department and the Contractor shall each choose one of the 3 nominated by the other. The final selection of the DRA will be decided by a coin toss between the two candidates.

The Department and the Contractor shall complete and adhere to the Dispute Resolution Advisor Agreement. No DRA meeting shall take place until the Dispute Resolution Advisor Agreement has been signed by all parties, unless all parties agree to sign it at the first meeting.

If DRA needs outside technical services, technical services shall be preapproved by both the Department and the Contractor.

DRA recommendations are nonbinding.

The Contractor shall not use the DRA for disputes between subcontractors or suppliers that have no grounds for a lawsuit against the Department.

DRA replacement is selected in the same manner as the original selection. The appointment of a replacement DRA will begin promptly upon determination of the need for replacement. The Dispute Resolution Advisor Agreement shall be amended to reflect the change of the DRA.

Failure of the Contractor to participate in selecting DRA will result in the withhold of 25 percent of the estimated value of all work performed during each estimate period that the Contractor fails to comply. DRA withholds will be released for payment on the next monthly progress payment following the date that the Contractor has provided assistance in choosing the DRA and no interest will be due the Contractor.

5.I-1.c(iii) Compensation

The State and the Contractor shall bear the costs and expenses of the DRA equally.

The DRA shall be compensated at an agreed rate of $1,500 per day for time spent per meeting either at the start of the project or for a dispute. A member serving on more than one State DRA or Dispute Review Board, regardless the number of meetings per day shall not be paid more than the agreed rate per day. The agreed rate shall be considered full compensation for on-site time, travel expenses, transportation, lodging, time for travel, and incidentals for each day or portion thereof that the DRA is at an authorized DRA meeting.

No additional compensation will be made for time spent by the DRA to review and research activities outside the official DRA meetings unless that time, such as time spent evaluating and preparing recommendations on specific issues presented to the DRA, has been specifically agreed to in advance by the State and Contractor. Time away from the project that has been specifically agreed to in advance by the Department and the Contractor will be compensated at an agreed rate of $150 per hour. The agreed amount of $150 per hour shall include all incidentals including expenses for telephone, fax, and computer services.

The State will provide conference facilities for DRA meetings at no cost to the Contractor.

The Contractor shall make direct payments to the DRA for participation in authorized meetings and approved hourly rate charges from invoices submitted.

The State will reimburse the Contractor for the State's share of the costs.

There will be no markups applied to expenses associated with the DRA, either by the DRA or by the Contractor when requesting payment of the State's share of DRA expenses. Regardless of the DRA recommendation, neither party will be entitled to reimbursement of DRA costs from the other party.

The Contractor shall submit extra work bills and include invoices with original supporting documents for reimbursement of the State's share.

The cost of technical services will be borne equally by the State and Contractor. There will be no markups for these costs.

5.I-1.c(iv) Dispute Resolution Advisor Agreement

The "Dispute Resolution Advisor Agreement" to be executed by the Contractor, State and DRA member shall be in substantially the following form:

Form CEM 6206 Rev (04-06-07)

DISPUTE RESOLUTION ADVISOR AGREEMENT

_____
(Contract Identification)
Contract No. _____

THIS DISPUTE RESOLUTION ADVISOR AGREEMENT, hereinafter called "AGREEMENT", made and entered into this _____ day of _____, _____, between the State of California, acting through the California Department of Transportation and the Director of Transportation, hereinafter called the "STATE," _____ hereinafter called the "CONTRACTOR," and _____, the Dispute Resolution Advisor, hereinafter called the "DRA." .

WITNESSETH, that

WHEREAS, the STATE and the CONTRACTOR, hereinafter called the "parties," are now engaged in the construction on the State Highway project referenced above; and

WHEREAS, the Special Provisions for the above referenced contract provides for the establishment and operation of the DRA to assist in resolving disputes; and

WHEREAS, the DRA is composed of one person, chosen by the CONTRACTOR and the STATE;

NOW THEREFORE, in consideration of the terms, conditions, covenants, and performance contained herein, or attached and incorporated and made a part hereof, the STATE, the CONTRACTOR, and the DRA hereto agree as follows:

SECTION I DESCRIPTION OF WORK

To assist in the timely resolution of disputes between the parties, the contract provides for the establishment and the operation of the DRA. The DRA is to fairly and impartially consider disputes placed before it and provide recommendations for resolution of these disputes to the parties. The DRA shall provide recommendations based on the facts related to the dispute, the contract and applicable laws and regulations. The DRA shall perform the services necessary to participate in the DRA's actions as designated in Section III, Scope of Work.

SECTION II DRA QUALIFICATIONS

DRA shall be knowledgeable in the type of construction and contract documents anticipated by the contract and shall have completed training through the Dispute Review Board Foundation. In addition, it is desirable for the DRA to have served on several State Dispute Review Boards (DRB).

No DRA shall have prior direct involvement in this contract. No DRA shall have a financial interest in this contract or parties thereto, including but not limited to the CONTRACTOR, subcontractors, suppliers, consultants, and legal and business services, within a period 6 months prior to award and during this contract. Exceptions to above are compensation for services on this or other DRAs and DRBs or retirement payments or pensions received from a party that are not tied to, dependent on or affected by the net worth of the party.

DRA shall fully disclose all direct or indirect professional or personal relationships with all key members of the contract.

SECTION III SCOPE OF WORK

The Scope of Work of the DRA includes, but is not limited to, the following:

A. PROCEDURES

The DRA shall meet with the parties at the start of the project to establish procedures that will govern the conduct of its business and reporting procedures in conformance with the requirements of the contract and the terms of this AGREEMENT. The DRA established procedures shall only be implemented upon approval by the parties. Subsequent meetings shall be held only to hear disputes between the parties.

The DRA shall not meet with, or discuss contract issues with individual parties.

State shall provide the DRA with the contract and all written correspondence regarding the dispute between the parties and, if available, the Contractor's supplemental notice of potential claim, and the Engineer's response to the supplemental notice of potential claim.

The parties shall not call the DRA who served on this contract as a witness in proceedings, which may arise from this contract.

The DRA shall have no claim against the STATE or the CONTRACTOR, or both, from claimed harm arising out of the parties' evaluations of the DRA's opinions.

B. DISPUTE MEETING

The term "dispute meeting" as used in this subsection shall refer to both the informal and traditional dispute meeting processes, unless otherwise noted.

If the CONTRACTOR requests a dispute meeting with the DRA, the Contractor must simultaneously notify the STATE. Upon being notified of the need for a dispute meeting, the DRA shall review and consider the dispute. The DRA shall determine the time and location of the dispute meeting with due consideration for the needs and preferences of the parties, while recognizing the importance of a speedy resolution to the dispute.

Dispute meetings shall be conducted at any location that would be convenient and provide required facilities and access to necessary documentation.

Only the STATE's Resident Engineer or Area Construction Engineer and the CONTRACTOR's or subcontractor's, if the dispute involves a subcontractor, Superintendent or Project Manager may present information at a dispute meeting. There shall be no participation of persons who are not directly involved in the contract or who do not have direct knowledge of the dispute. The exception to this is technical services, as described below:

The DRA, with approval of the parties, may obtain technical services necessary to adequately review the disputes presented, including audit, geotechnical, schedule analysis and other services. The parties' technical staff may supply those services as appropriate. The cost of technical services, as agreed to by the parties, shall be borne equally by the two parties as specified in an approved contract change order. The CONTRACTOR shall not be entitled to markups for the payments made for these services.

At the dispute meeting the DRA may ask questions, seek clarification, and request further clarification of data presented by either of the parties as may be necessary to assist in making a fully informed recommendation. However, the DRA shall refrain from expressing opinions on the merits of statements on matters under dispute during the parties' presentations. Each party will be given ample time to fully present its position, make rebuttals, provide relevant documents, and respond to DRA questions and requests.

There shall be no testimony under oath or cross-examination, during DRA dispute meetings. There shall be no reporting of the procedures by a shorthand reporter or by electronic means. Documents and verbal statements shall be received by the DRA in conformance with the rules and regulations established at the first meeting between the DRA and parties. These established rules and regulations need not comply with prescribed legal laws of evidence.

Failure to attend a dispute meeting by either of the parties shall be conclusively considered by the DRA as indication that the non-attending party considers all written documents and correspondence submitted as their entire and complete argument. The claimant shall discuss the dispute, followed by the other party. Each party shall then be allowed one or more rebuttals at the meeting until all aspects of the dispute are thoroughly covered.

1. TRADITIONAL DISPUTE MEETING:

The following procedure shall be used for the traditional dispute meeting:

a. Within 5 days, after receiving the STATE's written response to the CONTRACTOR's supplemental notice of potential claim, the CONTRACTOR shall refer the dispute to the DRA, if the CONTRACTOR wishes to further pursue the dispute. The CONTRACTOR shall make the referral in writing to the DRA, simultaneously copied to the STATE. The written dispute referral shall describe the disputed matter in individual discrete segments, so that it will be clear to both parties and the DRA what discrete elements of the dispute have been resolved, and which remain unresolved, and shall include an estimate of the cost of the affected work and impacts, if any, on project completion.

b. The parties shall each be afforded an opportunity to be present and to be heard by the DRA, and to offer evidence. Either party furnishing written evidence or documentation to the DRA must furnish copies of such information to the other party a minimum of 10 days prior to the date the DRA is scheduled to convene the meeting for the dispute. Either party shall produce such additional evidence as the DRA may deem necessary to reach an understanding and a determination of the dispute. The party furnishing additional evidence shall furnish copies of such additional evidence to the other party at the same time the evidence is provided to the DRA. The DRA shall not consider evidence not furnished in conformance with the terms specified herein.

c. Upon receipt by the DRA of a written referral of a dispute, the DRA shall convene to review and consider the dispute. The dispute meeting shall be held no later than 25 days after receipt of the written referral unless otherwise agreed to by all parties.

d. The DRA shall furnish a written report to both parties. The DRA may request clarifying information of either party within 5 days after the DRA dispute meeting. Requested information shall be submitted to the DRA within 5 days of the DRA request. The DRA shall complete its report and submit it to the parties within 10 days

of the DRA dispute meeting, except that time extensions may be granted at the request of the DRA with the written concurrence of both parties. The report shall summarize the facts considered, the contract language, law or regulation viewed by the DRA as pertinent to the dispute, and the DRA's interpretation and philosophy in arriving at its conclusions and recommendations and, if appropriate, recommends guidelines for determining compensation. The DRA's written opinion shall stand on its own, without attachments or appendices.

e. Within 10 days after receiving the DRA's report, both parties shall respond to the DRA in writing signifying that the dispute is either resolved or remains unresolved. Failure to provide the written response within the time specified, or a written rejection of the DRA's recommendation or response to a request for reconsideration presented in the report by either party, shall conclusively indicate that the party(s) failing to respond accepts the DRA recommendation. Immediately after responses have been received from both parties, the DRA shall provide copies of both responses to the parties simultaneously. Either party may request clarification of elements of the DRA's report from the DRA prior to responding to the report. The DRA shall consider any clarification request only if submitted within 5 days of receipt of the DRA's report, and if submitted simultaneously in writing to both the DRA and the other party. Each party may submit only one request for clarification for any individual DRA report. The DRA shall respond, in writing, to requests for clarification within 5 days of receipt of such requests.

f. Either party may seek a reconsideration of the DRA's recommendation. The DRA shall only grant reconsideration based upon submission of new evidence and if the request is submitted within the 10 day time limit specified for response to the DRA's written report. Each party may submit only one request for reconsideration regarding an individual DRA recommendation.

g. If the parties are able to settle their dispute with the aid of the DRA's report, the STATE and CONTRACTOR shall promptly accept and implement the settlement of the parties. If the parties cannot agree on compensation within 30 days of the acceptance by both parties of the settlement, either party may request the DRA to make a recommendation regarding compensation.

2. INFORMAL DISPUTE MEETING

An informal dispute meeting shall be convened, only if, the parties and the DRA agree that this dispute resolution process is appropriate to settle the dispute.

The following procedure shall be used for the informal dispute meeting:

a. The parties shall furnish the DRA with one copy of pertinent documents requested by the DRA that are or may become necessary for the DRA to perform its function. The party furnishing documents shall furnish such documents to the other party at the same time the document is provided to the DRA.

b. After the dispute meeting has concluded; the DRA shall deliberate in private the same day, until a response to the parties is reached or as otherwise agreed to by the parties.

c. The DRA then verbally delivers its recommendation with findings to the parties.

d. After the recommendation is presented, the parties may ask for clarifications.

e. Occasionally the DRA on complex issues may be unable to formulate a recommendation based on the information given at a dispute meeting. However, the DRA may provide the parties with advice on strengths and weaknesses of their prospective positions, in the hope of the parties reaching settlement.

f. If the parties are able to settle their dispute with the aid of the DRA's opinion, the STATE and CONTRACTOR shall promptly accept and implement the settlement of the parties.

g. The DRA will not be bound by its oral recommendation in the event that a dispute is later heard by the DRA in a traditional dispute meeting.

Unless the dispute is settled, use of the informal dispute meeting does not relive the parties of their responsibilities under Section 5-1.12, “Dispute Resolution Advisor,” of the Special Provisions or Subsection, “Traditional Dispute Meeting,” of this AGREEMENT. There will be no extension of time allowed for the process to permit the use of the informal dispute meeting, unless otherwise agreed to by the parties.

SECTION IV TIME FOR BEGINNING AND COMPLETION

Once established, the DRA shall be in operation until the day the Director accepts the contract. The DRA shall not begin work under the terms of this AGREEMENT until authorized in writing by the STATE or as agreed to by the parties.

SECTION V PAYMENT

DRA shall be compensated at an agreed rate of $1,500 per day for time spent per meeting, either at the start of the project or for a dispute. A member serving on more than one State DRA or DRB, regardless the number of meetings per day, shall not be paid more than the agreed rate per day. The agreed rate shall be considered full compensation for onsite time, travel expenses, transportation, lodging, time for travel and incidentals for each

day, or portion thereof that the DRA is at an authorized DRA meeting. No additional compensation will be made for time spent by DRA to review and research activities outside the official DRA meetings unless that time, (such as time spent evaluating and preparing recommendations on specific issues presented to the DRA), has been specifically agreed to in advance by the parties. Time away from the project, which has been specifically agreed to in advance by the parties, will be compensated at an agreed rate of $150 per hour. The agreed amount of $150 per hour shall include all incidentals including expenses for telephone, fax, and computer services. The State will provide administrative services such as conference facilities to the DRA.

A. PAYMENT PROCESSING

CONTRACTOR shall make direct payments to DRA for their participation in authorized meetings and approved hourly rate charges, from invoices submitted by the DRA, and technical services.

DRA may submit invoices to the CONTRACTOR for partial payment for work performed and services rendered for their participation in authorized meetings not more often than once per month during the progress of the work. The invoices shall be in a format approved by the parties and accompanied by a general description of activities performed during that billing period. Payment for hourly fees, at the agreed rate, shall not be paid to a DRA until the amount and extent of those fees are approved by the STATE and CONTRACTOR.

B. INSPECTION OF COSTS RECORDS

DRA and the CONTRACTOR shall keep available for inspection by representatives of the STATE and the United States, for a period of 3 years after final payment, the cost records and accounts pertaining to this AGREEMENT. If any litigation, claim, or audit arising out of, in connection with, or related to this contract is initiated before the expiration of the 3-year period, the cost records and accounts shall be retained until such litigation, claim, or audit involving the records is completed.

SECTION VI ASSIGNMENT OF TASKS OF WORK

DRA shall not assign the work of this AGREEMENT.

SECTION VII TERMINATION OF A DRA MEMBER

DRA may resign after providing not less than 15 days written notice of the resignation to the STATE and CONTRACTOR. The DRA may be terminated, by either party, for failing to fully comply at all times with all required employment or financial disclosure conditions of DRA membership in conformance with the terms of the contract and this AGREEMENT. Each party shall document the need for replacement and substantiate the replacement request in writing to the other party and the DRA.

SECTION VIII LEGAL RELATIONS

The parties hereto mutually understand and agree that the DRA in the performance of duties is acting in the capacity of an independent agent and not as an employee of either party.

No party to this AGREEMENT shall bear a greater responsibility for damages or personal injury than is normally provided by Federal or State of California Law.

Notwithstanding the provisions of this contract that require the CONTRACTOR to indemnify and hold harmless the STATE, the parties shall jointly indemnify and hold harmless the DRA from and against all claims, damages, losses, and expenses, including but not limited to attorney's fees, arising out of and resulting from the findings and recommendations of the DRA.

SECTION IX CONFIDENTIALITY

The parties hereto mutually understand and agree that all documents and records provided by the parties in reference to issues brought before the DRA, which documents and records are marked "Confidential - for use by the DRA only," shall be kept in confidence and used only for the purpose of resolution of subject disputes, and for assisting in development of DRA findings and recommendations; that such documents and records will not be utilized or revealed to others, except to officials of the parties who are authorized to act on the subject disputes, for any purposes, during the life of this AGREEMENT. Upon termination of this AGREEMENT, said confidential documents and records, and all copies thereof, shall be returned to the parties who furnished them to the DRA. The parties understand that such documents shall not be discoverable, in accordance with Evidence Code sections 1115 et seq. and/or 1152.

SECTION X DISPUTES

Disputes between the parties arising out of the work or other terms of this AGREEMENT that cannot be resolved by negotiation and mutual concurrence between the parties or through the administrative process provided in the contract shall be resolved in a court of competent jurisdiction within the County of Tehama.

Disputes between the DRA and the parties that cannot be resolved by negotiation and mutual concurrence shall be resolved in a court of competent jurisdiction within the County of Tehama.

SECTION XI VENUE, APPLICABLE LAW, AND PERSONAL JURISDICTION

In the event that any party, including the DRA, deems it necessary to institute proceedings to enforce any right or obligation under this AGREEMENT, the parties hereto agree that such action shall be initiated in a court of competent jurisdiction within the County of Tehama.

SECTION XII FEDERAL REVIEW AND REQUIREMENTS

On Federal-Aid contracts, the Federal Highway Administration shall have the right to review the work of the DRA in progress, except for private meetings or deliberations of the DRA.
Other Federal requirements in this agreement shall only apply to Federal-Aid contracts.

SECTION XIII CERTIFICATION OF CONTRACTOR, DRA, AND STATE

IN WITNESS WHEREOF, the parties hereto have executed this AGREEMENT as of the day and year first above written.

DRA

By: _____

Title: _____

CONTRACTOR	CALIFORNIA STATE DEPARTMENT OF TRANSPORTATION
By: _____	By: _____
Title: _____	Title: _____

5.I-1.d DISPUTE REVIEW BOARD

Section 5.I-1.d, "Dispute Review Board," applies to a contract over $10 million.

5.I-1.d(i) General

To assist in the resolution of disputes or potential claims arising out of the work of this project, a Dispute Review Board, hereinafter referred to as the "DRB," shall be established by the Engineer and Contractor cooperatively upon approval of the contract. The DRB is intended to assist the contract administrative claims resolution process as specified in the provisions in Section 9-1.04, "Notice of Potential Claim," and Section 9-1.07B, "Final Payment and Claims," of the Standard Specifications and these Special Provisions. The DRB shall not serve as a substitute for provisions in the specifications in regard to filing potential claims. The requirements and procedures established in this section shall be a prerequisite to filing a claim, filing for litigation prior or subsequent to project completion.

The DRB shall be utilized when dispute or potential claim resolution at the project level is unsuccessful. The DRB shall function as specified herein until the day of acceptance of the contract, at which time the work of the DRB will cease except for completion of unfinished reports. No DRB dispute meetings shall take place later than 30 days prior to acceptance of contract. After acceptance of contract, disputes or potential claims which have followed the dispute resolution processes of the Standard Specifications and these Special Provisions, but have not been resolved, shall be stated or restated by the Contractor, in response to the Proposed Final Estimate within the time limits provided in Section 9-1.07B, "Final Payment and Claims," of the Standard Specifications. The State will review those claims in conformance with the provisions in Section 9-1.07B of the Standard Specifications. Following the adherence to and completion of the contractual administrative claims procedure, the Contractor may initiate litigation in a court of competent jurisdiction within the County of Tehama.

Disputes, as used in this section, shall include differences of opinion, properly noticed as provided hereinafter, between the State and Contractor on matters related to the work and other subjects considered by the State or Contractor, or by both, to be of concern to the DRB on this project, except matters relating to Contractor, subcontractor or supplier potential claims not actionable against the Department as specified in these Special Provisions or quantification of disputes for overhead type expenses or costs. Disputes for overhead type expenses or costs shall conform to the requirements of Section 9-1.07B, "Final Payment and Claims," of the Standard Specifications. Whenever the term "dispute" or "disputes" is used herein, it shall be deemed to include potential claims as well as disputes.

The DRB shall serve as an advisory body to assist in the resolution of disputes between the State and the Contractor, hereinafter referred to as the "parties." The DRB shall consider disputes referred to it, and furnish written reports containing findings and recommendations pertaining to those disputes, to the parties to aid in resolution of the differences between them. DRB findings and recommendations are not binding on the parties.

5.I-1.d(ii) Selection Process, Disclosure and Appointments

The DRB shall consist of one member selected by the State and approved by the Contractor, one member selected by the Contractor and approved by the State, and a third member selected by the first 2 members and approved by both the State and the Contractor. The third member shall act as the DRB Chairperson.

DRB members shall be especially knowledgeable in the type of construction and contract documents potentially anticipated by the contract. DRB members shall discharge their responsibilities impartially as an independent body, considering the facts and circumstances related to the matters under consideration, pertinent provisions of the contract and applicable laws and regulations.

The State and the Contractor shall nominate and approve DRB members in conformance with the terms and conditions of the Dispute Review Board Agreement and these Special Provisions, within 45 days of the approval of the contract. Each party shall provide written notification to the other of the name of their selected DRB nominee along with the prospective member's complete written disclosure statement.

Disclosure statements shall include a resume of the prospective member's experience and a declaration statement describing past, present, anticipated, and planned relationships, including indirect relationships through the prospective member's primary or full-time employer, to this project and with the parties

involved in this construction contract, including but not limited to, relevant subcontractors or suppliers to the parties, parties' principals, or parties' counsel. DRB members shall also include a full disclosure of close professional or personal relationships with all key members of the contract. Objections to nominees must be based on a specific breach or violation of nominee responsibilities or on nominee qualifications under these provisions unless otherwise specified. The Contractor or the State may, on a one-time basis, object to the other's nominee without specifying a reason and this person will not be selected for the DRB. Another person shall then be nominated within 15 days.

The first duty of the State and Contractor selected members of the DRB shall be to select and recommend a prospective third DRB member to the parties for final selection and approval. The first 2 DRB members shall proceed with the selection of the third DRB member immediately upon receiving written notification from the State of their selection, and shall provide their recommendation simultaneously to the parties within 15 days of the notification.

The first 2 DRB members shall select a third DRB member subject to mutual approval of the parties or may mutually concur on a list of potentially acceptable third DRB members and submit the list to the parties for final selection and approval of the third member. The goal in the selection of the third member is to complement the professional experience of the first 2 members and to provide leadership for the DRB's activities.

The third prospective DRB member shall supply a full disclosure statement to the first 2 DRB members and to the parties prior to appointment.

An impasse shall be considered to have been reached if the parties are unable to approve a third member within 15 days of receipt of the recommendation of the first 2 DRB members, or if the first 2 DRB members are unable to agree upon a recommendation within their 15 day time limit. In the event of an impasse in selection of third DRB member the State and the Contractor shall each propose 3 candidates for the third DRB member position. The parties shall select the candidates proposed under this paragraph from the current list of arbitrators certified by the Public Works Contract Arbitration Committee created by Article 7.2 (commencing with Section 10245) of the State Contract Act. The first 2 DRB members shall then select one of the 6 proposed candidates in a blind draw.

No DRB member shall have prior direct involvement in this contract. No member shall have a financial interest in this contract or the parties thereto, within a period of 6 months prior to award of this contract or during the contract, except as follows:

A. Compensation for services on this DRB.

B. Ownership interest in a party or parties, documented by the prospective DRB member, that has been reviewed and determined in writing by the State to be sufficiently insignificant to render the prospective member acceptable to the State.

C. Service as a member of other Dispute Review Boards on other contracts.

D. Retirement payments or pensions received from a party that are not tied to, dependent on or affected by the net worth of the party.

E. The above provisions apply to parties having a financial interest in this contract, including but not limited to contractors, subcontractors, suppliers, consultants, and legal and business services.

The Contractor or the State may reject any of the 3 DRB members who fail to fully comply at all times with all required employment and financial disclosure conditions of DRB membership as described in the Dispute Review Board Agreement and as specified herein. A copy of the Dispute Review Board Agreement is included in this section.

The Contractor, the State, and the 3 members of the DRB shall complete and adhere to the Dispute Review Board Agreement in administration of this DRB within 15 days of the parties' concurrence in the selection of the third member. No DRB meeting shall take place until the Dispute Review Board Agreement has been signed by all parties. The State authorizes the Engineer to execute and administer the terms of the Agreement. The person(s) designated by the Contractor as authorized to execute contract change orders shall be authorized to execute and administer the terms of this agreement, or to delegate the authority in

writing. The operation of the DRB shall be in conformance with the terms of the Dispute Review Board Agreement.

5.I-1.d(iii) Compensation

The State and the Contractor shall bear the costs and expenses of the DRB equally. Each DRB member shall be compensated at an agreed rate of $1,200 per day if time spent per meeting, including on-site time plus one hour of travel time, is greater than 4 hours. Each DRB member shall be compensated at an agreed rate of $700 per day if time spent per meeting, including on-site time plus one hour of travel time, is less than or equal to 4 hours. The agreed rates shall be considered full compensation for on-site time, travel expenses, transportation, lodging, time for travel and incidentals for each day, or portion thereof, that the DRB member is at an authorized DRB meeting. No additional compensation will be made for time spent by DRB members in review and research activities outside the official DRB meetings unless that time, (such as time spent evaluating and preparing recommendations on specific issues presented to the DRB), has been specifically agreed to in advance by the State and Contractor. Time away from the project, which has been specifically agreed to in advance by the parties, will be compensated at an agreed rate of $125 per hour. The agreed amount of $125 per hour shall include all incidentals including expenses for telephone, fax, and computer services. Members serving on more than one DRB involving the Department, regardless of the number of meetings per day, shall not be paid more than the all inclusive rate per day or rate per hour for an individual project. The State will provide, at no cost to the Contractor, administrative services such as conference facilities and secretarial services to the DRB. These Special Provisions and the Dispute Review Board Agreement state the provisions for compensation and expenses of the DRB. DRB members shall be compensated at the same daily and hourly rate. The Contractor shall make direct payments to each DRB member for their participation in authorized meetings and approved hourly rate charges from invoices submitted by each DRB member. The State will reimburse the Contractor for the State's share of the costs. There will be no markups applied to expenses connected with the DRB, either by the DRB members or by the Contractor when requesting payment of the State's share of DRB expenses. Regardless of the DRB recommendation, neither party shall be entitled to reimbursement of DRB costs from the other party.

5.I-1.d(iv) Replacement of DRB Members

Service of a DRB member may be terminated at any time with not less than 15 days notice as follows:

A. The State may terminate service of the State appointed member.

B. The Contractor may terminate service of the Contractor appointed member.

C. Upon the written recommendation of the State and Contractor appointed members for the removal of the third member.

D. Upon resignation of a member.

E. The State or Contractor may terminate the service of any member who fails to fully comply with all required employment and financial disclosure conditions of DRB membership.

When a member of the DRB is replaced, the replacement member shall be appointed in the same manner as the replaced member was appointed. The appointment of a replacement DRB member will begin promptly upon determination of the need for replacement and shall be completed within 15 days. Changes in either of the DRB members chosen by the 2 parties will not require re-selection of the third member, unless both parties agree to such re-selection in writing. The Dispute Review Board Agreement shall be amended to reflect the change of a DRB member.

5.I-1.d(v) Operation

The following procedure shall be used for dispute resolution:

A. If the Contractor objects to any decision, act or order of the Engineer, the Contractor shall give written notice of potential claim in conformance with the provisions in Section 9-1.04, "Notice of Potential Claim," of the Standard Specifications and these Special Provisions, including the provision of applicable cost documentation; or file written protests or notices in conformance with the provisions in the Standard Specifications and these Special Provisions.

B. The Engineer will respond, in writing, to the Contractor's written supplemental notice of potential claim within 20 days of receipt of the notice.

C. Within 15 days after receipt of the Engineer's written response, the Contractor shall, if the Contractor still objects, file a written reply with the Engineer, stating clearly and in detail the basis of the objection.

D. Following an objection to the Engineer's written response, the Contractor shall refer the dispute to the DRB if the Contractor wishes to further pursue the objection to the Engineer's decision. The Contractor shall make the referral in writing to the DRB, simultaneously copied to the State, within 21 days after receipt of the written response from the Engineer. The written dispute referral shall describe the disputed matter in individual discrete segments so that it will be clear to both parties and the DRB what discrete elements of the dispute have been resolved, and which remain unresolved, and shall include an estimate of the cost of the affected work and impacts, if any, on project completion.

E. By failing to submit the written notice of referral to the DRB, within 21 days after receipt of the Engineer's written response to the supplemental notice of potential claim, the Contractor waives future claims and litigation on the matter in contention.

F. The Contractor and the State shall each be afforded an opportunity to be present and to be heard by the DRB, and to offer evidence. Either party furnishing written evidence or documentation to the DRB must furnish copies of such information to the other party a minimum of 15 days prior to the date the DRB is scheduled to convene the meeting for the dispute. Either party shall produce such additional evidence as the DRB may deem necessary to reach an understanding and a determination of the dispute. The party furnishing additional evidence shall furnish copies of such additional evidence to the other party at the same time the evidence is provided to the DRB. The DRB shall not consider evidence not furnished in conformance with the terms specified herein.

G. Upon receipt by the DRB of a written referral of a dispute, the DRB shall convene to review and consider the dispute. The dispute meeting shall be held no earlier than 30 days and no later than 60 days after receipt of the written referral unless otherwise agreed to by all parties. The DRB shall determine the time and location of the DRB dispute meeting, with due consideration for the needs and preferences of the parties while recognizing the paramount importance of a timely hearing of the dispute.

H. [Omitted.]

I. [Omitted.]

J. The DRB shall furnish a report, containing findings and recommendations as described in the Dispute Review Board Agreement, in writing to both the State and the Contractor. The DRB may request clarifying information of either party within 10 days after the DRB dispute meeting. Requested information shall be submitted to the DRB within 10 days of the DRB request. The DRB shall complete its report, including minority opinion, if any, and submit it to the parties within 30 days of the DRB dispute meeting, except that time extensions may be granted at the request of the DRB with the written concurrence of both parties. The report shall include the facts and circumstances related to the matters under consideration, pertinent provisions of the contract, applicable laws and regulations, and actual costs and time incurred as shown on the Contractor's cost accounting records. The DRB shall make recommendations on the merit of the dispute and, if appropriate, recommend guidelines for determining compensation.

K. Within 30 days after receiving the DRB's report, both the State and the Contractor shall respond to the DRB in writing signifying that the dispute is either resolved or remains unresolved. Failure to provide the written response within the time specified, or a written rejection of the DRB's recommendation or response to a request for reconsideration presented in the report by either party, shall conclusively indicate that the party(s) failing to respond accepts the DRB recommendation. Immediately after responses have been received from both parties, the DRB shall provide copies of both responses to the parties simultaneously. Either party may request clarification of elements of the DRB's report from the DRB prior to responding to the report. The DRB shall consider any clarification request only if submitted within 10 days of receipt of the DRB's report, and if submitted simultaneously in writing to both the DRB and the

other party. Each party may submit only one request for clarification for any individual DRB report. The DRB shall respond, in writing, to requests for clarification within 10 days of receipt of such requests.

L. The DRB's recommendations, stated in the DRB's reports, are not binding on either party. Either party may seek a reconsideration of a recommendation of the DRB. The DRB shall only grant a reconsideration based upon submission of new evidence and if the request is submitted within the 30-day time limit specified for response to the DRB's written report. Each party may submit only one request for reconsideration regarding an individual DRB recommendation.

M. If the State and the Contractor are able to resolve their dispute with the aid of the DRB's report, the State and Contractor shall promptly accept and implement the recommendations of the DRB. If the parties cannot agree on compensation within 60 days of the acceptance by both parties of the DRB's recommendation, either party may request the DRB to make a recommendation regarding compensation.

N. The State or the Contractor shall not call DRB members who served on the DRB for this contract as witnesses in proceedings which may arise from this contract, and all documents created by the DRB shall be inadmissible as evidence in subsequent proceedings, except the DRB's final written reports on each issue brought before it.

O. The State and Contractor shall jointly indemnify and hold harmless the DRB members from and against all claims, damages, losses, and expenses, including but not limited to attorney's fees, arising out of and resulting from the findings and recommendations of the DRB.

P. The DRB members shall have no claim against the State or the Contractor, or both, from claimed harm arising out of the parties' evaluations of the DRB's report.

Disputes Involving Subcontractor Potential Claims

For purposes of this section, a "subcontractor potential claim" shall include any potential claim by a subcontractor (including also any pass through potential claims by a lower tier subcontractor or supplier) against the Contractor that is actionable by the Contractor against the Department which arises from the work, services, or materials provided or to be provided in connection with the contract. If the Contractor determines to pursue a dispute against the Department that includes a subcontractor potential claim, the dispute shall be processed and resolved in conformance with these Special Provisions and in conformance with the following:

A. The Contractor shall identify clearly in submissions pursuant to this section, that portion of the dispute that involves a subcontractor potential claim or potential claims.

B. The Contractor shall include, as part of its submission pursuant to Step D above, a certification (False Claims Act Certification) by the subcontractor's or supplier's officer, partner, or authorized representative with authority to bind the subcontractor and with direct knowledge of the facts underlying the subcontractor potential claim. The Contractor shall submit a certification that the subcontractor potential claim is acknowledged and forwarded by the Contractor. The form for these certifications is available from the Engineer.

C. At DRB dispute meetings involving one or more subcontractor potential claims, the Contractor shall require that each subcontractor involved in the dispute have present an authorized representative with actual knowledge of the facts underlying the subcontractor potential claim to assist in presenting the subcontractor potential claim and to answer questions raised by the DRB members or the Department's representatives.

D. Failure by the Contractor to declare a subcontractor potential claim on behalf of its subcontractor (including lower tier subcontractors' and suppliers' pass through potential claims) at the time of submission of the Contractor's potential claims, as provided hereunder, shall constitute a release of the State by the Contractor of such subcontractor potential claim.

E. The Contractor shall include in all subcontracts under this contract that subcontractors and suppliers of any tier (a) agree to submit subcontractor potential claims to the Contractor in a proper form and in sufficient time to allow processing by the Contractor in conformance with the Dispute Review Board resolution specifications; (b) agree to be bound by the terms of the Dispute Review Board provisions to the extent applicable to subcontractor potential claims; (c) agree that, to the extent a

subcontractor potential claim is involved, completion of all steps required under these Dispute Review Board Special Provisions shall be a condition precedent to pursuit by the subcontractor of other remedies permitted by law, including without limitation of a lawsuit against the Contractor; and (d) agree that the existence of a dispute resolution process for disputes involving subcontractor potential claims shall not be deemed to create any claim, right, or cause of action by any subcontractor or supplier against the Department.

Notwithstanding the foregoing, this Dispute Review Board special provision shall not apply to, and the DRB shall not have the authority to consider, subcontractor potential claims between the subcontractor(s) or supplier(s) and the Contractor that are not actionable by the Contractor against the Department.

5.I-1.d(vi) Dispute Review Board Agreement

The "Dispute Review Board Agreement" to be executed by the Contractor, State and the 3 DRB members after approval of the contract shall be in substantially the following form:

Form 6202 Rev (09/01/02)

DISPUTE REVIEW BOARD AGREEMENT

_____
(Contract Identification)
Contract No. _____

THIS DISPUTE REVIEW BOARD AGREEMENT, hereinafter called "AGREEMENT", made and entered into this _____ day of _____, _____, between the State of California, acting through the California Department of Transportation and the Director of Transportation, hereinafter called the "STATE," _____ _____ hereinafter called the "CONTRACTOR," and the Dispute Review Board, hereinafter called the "DRB" consisting of the following members:

_____ ,
(Contractor Appointee)

_____ ,
(State Appointee)
and _____
(Third Person)

WITNESSETH, that
WHEREAS, the STATE and the CONTRACTOR, hereinafter called the "parties," are now engaged in the construction on the State Highway project referenced above; and
WHEREAS, the Special Provisions for the above referenced contract provides for the establishment and operation of the DRB to assist in resolving disputes; and
WHEREAS, the DRB is composed of three members, one selected by the STATE, one selected by the CONTRACTOR, and the third member selected by the other two members and approved by the parties;
NOW THEREFORE, in consideration of the terms, conditions, covenants, and performance contained herein, or attached and incorporated and made a part hereof, the STATE, the CONTRACTOR, and the DRB members hereto agree as follows:

SECTION I DESCRIPTION OF WORK

To assist in the resolution of disputes between the parties, the contract provides for the establishment and the operation of the DRB. The intent of the DRB is to fairly and impartially consider disputes placed before it and provide written recommendations for resolution of these disputes to both parties. The members of this DRB shall perform the services necessary to participate in the DRB's actions as designated in Section II, Scope of Work.

SECTION II SCOPE OF WORK

The scope of work of the DRB includes, but is not limited to, the following:

A. OBJECTIVE

The principal objective of the DRB is to assist in the timely resolution of disputes between the parties arising from performance of this contract. It is not intended for either party to default on their normal responsibility to amicably and fairly settle their differences by indiscriminately assigning them to the DRB. It is intended that the mere existence of the DRB will encourage the parties to resolve disputes without resorting to this review procedure. But when a dispute that is serious enough to warrant the DRB's review does develop, the process for prompt and efficient action will be in place.

B. PROCEDURES

The DRB shall render written reports on disputes between the parties arising from the construction contract. Prior to consideration of a dispute, the DRB shall establish rules and regulations that will govern the conduct of its business and reporting procedures in conformance with the requirements of the contract and the terms of this AGREEMENT. DRB recommendations, resulting from its consideration of a dispute, shall be furnished in writing to both parties. The recommendations shall be based on facts and circumstances involved in the dispute, pertinent contract provisions, applicable laws and regulations. The recommendations shall find one responsible party in a dispute; shared or "jury" determinations shall not be rendered. The DRB shall make

recommendations on the merit of the dispute, and if appropriate, recommend guidelines for determining compensation. If the parties cannot agree on compensation within 60 days of the acceptance by both parties of the DRB's recommendation, either party may request the DRB to make a recommendation regarding compensation.

The DRB shall refrain from officially giving advice or consulting services to anyone involved in the contract. The individual members shall act in a completely independent manner and while serving as members of the DRB shall have no consulting business connections with either party or its principals or attorneys or other affiliates (subcontractors, suppliers, etc.) who have a beneficial interest in the contract.

During scheduled meetings of the DRB as well as during dispute meetings, DRB members shall refrain from expressing opinions on the merits of statements on matters under dispute or potential dispute. Opinions of DRB members expressed in private sessions shall be kept strictly confidential. Individual DRB members shall not meet with, or discuss contract issues with individual parties, except as directed by the DRB Chairperson. Such discussions or meetings shall be disclosed to both parties. Other discussions regarding the project between the DRB members and the parties shall be in the presence of all three members and both parties. Individual DRB members shall not undertake independent investigations of any kind pertaining to disputes or potential disputes, except with the knowledge of both parties and as expressly directed by the DRB Chairperson.

C. CONSTRUCTION SITE VISITS, PROGRESS MEETINGS AND FIELD INSPECTIONS

The DRB members shall visit the project site and meet with representatives of the parties to keep abreast of construction activities and to develop familiarity with the work in progress. Scheduled progress meetings shall be held at or near the project site. The DRB shall meet at least once at the start of the project, and at least once every 4 months thereafter. The frequency, exact time, and duration of additional site visits and progress meetings shall be as recommended by the DRB and approved by the parties consistent with the construction activities or matters under consideration and dispute. Each meeting shall consist of a round table discussion and a field inspection of the work being performed on the contract, if necessary. Each meeting shall be attended by representatives of both parties. The agenda shall generally be as follows:

1. Meeting opened by the DRB Chairperson.
2. Remarks by the STATE's representative.
3. A description by the CONTRACTOR's representative of work accomplished since the last meeting; the current schedule status of the work; and a forecast for the coming period.
4. An outline by the CONTRACTOR's representative of potential problems and a description of proposed solutions.
5. An outline by the STATE's representative of the status of the work as the STATE views it.
6. A brief description by the CONTRACTOR's or STATE's representative of potential claims or disputes which have surfaced since the last meeting.
7. A summary by the STATE's representative, the CONTRACTOR's representative, or the DRB of the status of past disputes and potential claims.

The STATE's representative will prepare minutes of all progress meetings and circulate them for revision and approval by all concerned within 10 days of the meeting.

The field inspection shall cover all active segments of the work, the DRB being accompanied by both parties' representatives. The field inspection may be waived upon mutual agreement of the parties.

D. DRB CONSIDERATION AND HANDLING OF DISPUTES

Upon receipt by the DRB of a written referral of a dispute, the DRB shall convene to review and consider the dispute. The dispute meeting shall be held no earlier than 30 days and no later than 60 days after receipt of the written referral, unless otherwise agreed to by all parties. The DRB shall determine the time and location of DRB dispute meetings, with due consideration for the needs and preferences of the parties while recognizing the paramount importance of speedy resolution of issues. No dispute meetings shall take place later than 30 days prior to acceptance of contract.

Normally, dispute meetings shall be conducted at or near the project site. However, any location that would be more convenient and still provide required facilities and access to necessary documentation shall be satisfactory. Both parties shall be given the opportunity to present their evidence at these dispute meetings. It is expressly understood that the DRB members are to act impartially and independently in the consideration of the contract provisions, applicable laws and regulations, and the facts and conditions surrounding any dispute presented by either party, and that the recommendations concerning any such dispute are advisory and nonbinding on the parties.

The DRB may request that written documentation and arguments from both parties be sent to each DRB member, through the DRB Chairperson, for review before the dispute meeting begins. A party furnishing

written documentation to the DRB shall furnish copies of such information to the other party at the same time that such information is supplied to the DRB.
DRB dispute meetings shall be informal. There shall be no testimony under oath or cross-examination. There shall be no reporting of the procedures by a shorthand reporter or by electronic means. Documents and verbal statements shall be received by the DRB in conformance with acceptance standards established by the DRB. These standards need not comply with prescribed legal laws of evidence.
The third DRB member shall act as Chairperson for dispute meetings and all other DRB activities. The parties shall have a representative at all dispute meetings. Failure to attend a duly noticed dispute meeting by either of the parties shall be conclusively considered by the DRB as indication that the non-attending party considers written submittals as their entire and complete argument. The claimant shall discuss the dispute, followed by the other party. Each party shall then be allowed one or more rebuttals until all aspects of the dispute are thoroughly covered. DRB members shall ask questions, seek clarification, and request further data from either of the parties as may be necessary to assist in making a fully informed recommendation. The DRB may request from either party documents or information that would assist the DRB in making its findings and recommendations including, but not limited to, documents used by the CONTRACTOR in preparing the bid for the project. A refusal by a party to provide information requested by the DRB may be considered by the DRB as an indication that the requested material would tend to disprove that party's position. In large or complex cases, additional dispute meetings may be necessary in order to consider all the evidence presented by both parties. All involved parties shall maintain the confidentiality of all documents and information, as provided in this AGREEMENT.
During dispute meetings, no DRB member shall express an opinion concerning the merit of any facet of the case. DRB deliberations shall be conducted in private, with interim individual views kept strictly confidential. After dispute meetings are concluded, the DRB shall meet in private and reach a conclusion supported by 2 or more members. Private sessions of the DRB may be held at a location other than the job site or by electronic conferencing as deemed appropriate, in order to expedite the process.
The DRB's findings and recommendations, along with discussion of reasons therefor, shall then be submitted as a written report to both parties. Recommendations shall be based on the pertinent contract provisions, applicable laws and regulations, and facts and circumstances related to the dispute. The report shall be thorough in discussing the facts considered, the contract language, law or regulation viewed by the DRB as pertinent to the issues, and the DRB's interpretation and philosophy in arriving at its conclusions and recommendations. The DRB's report shall stand on its own, without attachments or appendices. The DRB Chairperson shall furnish a copy of the written recommendation report to the DRB Coordinator, Division of Construction, MS 44, P.O. Box 942874, Sacramento, CA 94274.
With prior written approval of both parties, the DRB may obtain technical services necessary to adequately review the disputes presented, including audit, geotechnical, schedule analysis and other services. The parties' technical staff may supply those services as appropriate. The cost of technical services, as agreed to by the parties, shall be borne equally by the 2 parties as specified in an approved contract change order. The CONTRACTOR will not be entitled to markups for the payments made for these services.
The DRB shall resist submittal of incremental portions of information by either party, in the interest of making a fully informed decision and recommendation.
The DRB shall make every effort to reach a unanimous decision. If this proves impossible, the dissenting member shall prepare a minority opinion, which shall be included in the DRB's report.
Although both parties should place weight upon the DRB's recommendations, they are not binding. Either party may appeal a recommendation to the DRB for reconsideration. However, reconsideration shall only be allowed when there is new evidence to present, and the DRB shall accept only one appeal from each party pertaining to an individual DRB recommendation. The DRB shall hear appeals in conformance with the terms described in the Section entitled "Dispute Review Board" in the Special Provisions.

E. DRB MEMBER REPLACEMENT

Should the need arise to appoint a replacement DRB member, the replacement DRB member shall be appointed in the same manner as the original DRB members were appointed. The selection of a replacement DRB member shall begin promptly upon notification of the necessity for a replacement and shall be completed within 15 days. This AGREEMENT shall be amended to indicate change in DRB membership.

SECTION III CONTRACTOR RESPONSIBILITIES

The CONTRACTOR shall furnish to each DRB member one copy of pertinent documents that are or may become necessary for the DRB to perform their function. Pertinent documents are written notices of potential claim, responses to those notices, drawings or sketches, calculations, procedures, schedules, estimates, or other

documents which are used in the performance of the work or in justifying or substantiating the CONTRACTOR's position. The CONTRACTOR shall also furnish a copy of such pertinent documents to the STATE, in conformance with the terms outlined in the Special Provisions.

SECTION IV STATE RESPONSIBILITIES

The STATE will furnish the following services and items:

A. CONTRACT RELATED DOCUMENTS

The STATE will furnish to each DRB member one copy of Notice to Bidders and Special Provisions, Bid and Contract, Plans, Standard Specifications, and Standard Plans, change orders, written instructions issued by the STATE to the CONTRACTOR, or other documents pertinent to any dispute that has been referred to the DRB and necessary for the DRB to perform its function.

B. COORDINATION AND SERVICES

The STATE, through the Engineer, will, in cooperation with the CONTRACTOR, coordinate the operations of the DRB. The Engineer will arrange or provide conference facilities at or near the project site and provide secretarial and copying services to the DRB without charge to the CONTRACTOR.

SECTION V TIME FOR BEGINNING AND COMPLETION

Once established, the DRB shall be in operation until the day of acceptance of the contract. The DRB members shall not begin work under the terms of this AGREEMENT until authorized in writing by the STATE.

SECTION VI PAYMENT

A. ALL INCLUSIVE RATE PAYMENT

The STATE and the CONTRACTOR shall bear the costs and expenses of the DRB equally. Each DRB member shall be compensated at an agreed rate of $1,200 per day if time spent per meeting, including on-site time plus one hour of travel time, is greater than 4 hours. Each DRB member shall be compensated at an agreed rate of $700 per day if time spent per meeting, including on-site time plus one hour of travel time, is less than or equal to 4 hours. The agreed rates shall be considered full compensation for on-site time, travel expenses, transportation, lodging, time for travel and incidentals for each day, or portion thereof, that the DRB member is at an authorized DRB meeting. No additional compensation will be made for time spent by DRB members in review and research activities outside the official DRB meetings unless that time has been specifically agreed to in advance by the STATE and CONTRACTOR. Time away from the project that has been specifically agreed to in advance by the parties will be compensated at an agreed rate of $125 per hour. The agreed amount of $125 per hour shall include all incidentals including expenses for telephone, fax, and computer services. Members serving on more than one DRB involving the State, regardless of the number of meetings per day, shall not be paid more than the all inclusive rate per day or rate per hour for an individual project. The STATE will provide, at no cost to the CONTRACTOR, administrative services such as conference facilities and secretarial services to the DRB.

B. PAYMENTS

DRB members shall be compensated at the same rate. The CONTRACTOR shall make direct payments to each DRB member for their participation in authorized meetings and approved hourly rate charges from invoices submitted by each DRB member. The STATE will reimburse the CONTRACTOR for its share of the costs of the DRB.

The DRB members may submit invoices to the CONTRACTOR for partial payment for work performed and services rendered for their participation in authorized meetings not more often than once per month during the progress of the work. The invoices shall be in a format approved by the parties and accompanied by a general description of activities performed during that billing period. Payment for hourly fees, at the agreed rate, shall not be paid to a DRB member until the amount and extent of those fees are approved by the STATE and CONTRACTOR.

Invoices shall be accompanied by original supporting documents, which the CONTRACTOR shall include with the extra work billing when submitting for reimbursement of the STATE's share of cost from the STATE. The CONTRACTOR will be reimbursed for one-half of approved costs of the DRB. No markups will be added to the CONTRACTOR's payment.

C. INSPECTION OF COSTS RECORDS

The DRB members and the CONTRACTOR shall keep available for inspection by representatives of the STATE and the United States, for a period of 3 years after final payment, the cost records and accounts pertaining to this AGREEMENT. If any litigation, claim, or audit arising out of, in connection with, or related

to this contract is initiated before the expiration of the 3-year period, the cost records and accounts shall be retained until such litigation, claim, or audit involving the records is completed.

SECTION VII ASSIGNMENT OF TASKS OF WORK

The DRB members shall not assign the work of this AGREEMENT.

SECTION VIII TERMINATION OF DRB MEMBERS

DRB members may resign from the DRB by providing not less than 15 days written notice of the resignation to the STATE and CONTRACTOR. DRB members may be terminated by their original appointing power or by either party, for failing to fully comply at all times with all required employment and financial disclosure conditions of DRB membership in conformance with the terms of the contract.

SECTION IX LEGAL RELATIONS

The parties hereto mutually understand and agree that the DRB member in the performance of duties on the DRB, is acting in the capacity of an independent agent and not as an employee of either party.

No party to this AGREEMENT shall bear a greater responsibility for damages or personal injury than is normally provided by Federal or State of California Law.

Notwithstanding the provisions of this contract that require the CONTRACTOR to indemnify and hold harmless the STATE, the parties shall jointly indemnify and hold harmless the DRB members from and against all claims, damages, losses, and expenses, including but not limited to attorney's fees, arising out of and resulting from the findings and recommendations of the DRB.

SECTION X CONFIDENTIALITY

The parties hereto mutually understand and agree that all documents and records provided by the parties in reference to issues brought before the DRB, which documents and records are marked "Confidential - for use by the DRB only," shall be kept in confidence and used only for the purpose of resolution of subject disputes, and for assisting in development of DRB findings and recommendations; that such documents and records will not be utilized or revealed to others, except to officials of the parties who are authorized to act on the subject disputes, for any purposes, during the life of the DRB. Upon termination of this AGREEMENT, said confidential documents and records, and all copies thereof, shall be returned to the parties who furnished them to the DRB. The parties understand that such documents shall not be discoverable, in accordance with Evidence Code sections 1115 et seq. and/or 1152.

SECTION XI DISPUTES

Disputes between the parties hereto, including disputes between the DRB members and either party or both parties, arising out of the work or other terms of this AGREEMENT, which cannot be resolved by negotiation and mutual concurrence between the parties, or through the administrative process provided in the contract, shall be resolved in a court of competent jurisdiction within the County of Tehama.

SECTION XII VENUE, APPLICABLE LAW, AND PERSONAL JURISDICTION

In the event that any party, including an individual member of the DRB, deems it necessary to institute proceedings to enforce any right or obligation under this AGREEMENT, the parties hereto agree that such action shall be initiated in a court of competent jurisdiction within the County of Tehama.

SECTION XIII FEDERAL REVIEW AND REQUIREMENTS

On Federal-Aid contracts, the Federal Highway Administration shall have the right to review the work of the DRB in progress, except for private meetings or deliberations of the DRB.

Other Federal requirements in this agreement shall only apply to Federal-Aid contracts.

SECTION XIV CERTIFICATION OF THE CONTRACTOR, THE DRB MEMBERS, AND THE STATE

IN WITNESS WHEREOF, the parties hereto have executed this AGREEMENT as of the day and year first above written.

DRB MEMBER	DRB MEMBER
By: _____	By: _____
Title: _____	Title :_____

DRB MEMBER

By :_____

Title :_____

CONTRACTOR	CALIFORNIA STATE DEPARTMENT OF TRANSPORTATION
By: _____	By: _____
Title: _____	Title: _____

END OF SECTION

SECTION 6 CONTROL OF MATERIALS

6.A GENERAL

The bidder's attention is directed to the provisions in Section 6 ”Control of Materials” of the Standard Specifications and these Special Provisions.

6.B AUTHORIZED MATERIALS LIST

The Department adopts Caltrans’s maintained Pre-Qualified Products List (Authorized Materials List) for various construction materials, and can be found at:

http://www.dot.ca.gov/hq/esc/approved_products_list/

Materials may be used or specified to be on this maintained list. The Engineer shall not be precluded from sampling and testing products on the Pre-Qualified Products List.

The manufacturer of products on the list of Prequalified and Tested Signing and Delineation Materials shall furnish the Engineer a Certificate of Compliance in conformance with the provisions in Section 6-3.05E, "Certificates of Compliance," of the Standard Specifications for each type of material supplied that applies to this list.

For those categories of materials included on the Pre-Qualified Products List, only those products shown within the listing may be used in the work. Other categories of products, not included on the list of Prequalified and Tested Signing and Delineation Materials, may be used in the work provided they conform to the requirements of the Standard Specifications.

Materials and products may be added to the Pre-Qualified Products List if the manufacturer submits a New Product Information Form to the New Product Coordinator at the Transportation Laboratory. Upon a Departmental request for samples, sufficient samples shall be submitted to permit performance of required tests. Approval of materials or products will depend upon compliance with the specifications and tests the Department may elect to perform.

6.C BUY AMERICA

Furnish steel and iron materials to be incorporated into the work with certificates of compliance. Steel and iron materials must be produced in the U.S. except:

1. Foreign pig iron and processed, pelletized, and reduced iron ore may be used in the domestic production of the steel and iron materials [60 Fed Reg 15478 (03/24/1995)];
2. If the total combined cost of the materials does not exceed the greater of 0.1 percent of the total bid or $2,500, materials produced outside the U.S. may be used.

Production includes:

1. Processing steel and iron materials, including smelting or other processes that alter the physical form or shape (such as rolling, extruding, machining, bending, grinding, and drilling) or chemical composition;
2. Coating application, including epoxy coating, galvanizing, and painting, that protects or enhances the value of steel and iron materials.

6.D QUALITY ASSURANCE

The Department uses a Quality Assurance Program (QAP) to ensure a material is produced to comply with the Contract.

Allow the Department to record, including photograph and video record, to ensure a material is produced to comply with the Contract.

You may examine the records and reports of tests the Department performs if they are available at the job site.

Schedule work to allow time for QAP.

The Department deducts testing costs for work that does not comply with the Contract.

The Department may retest material previously tested and authorized for use. If the Department notifies you of a retest, furnish resources for retesting.

For a material specified to comply with a State Specification number, the material may comply with a later version of the specification. Obtain State Specifications from METS.

For a material to comply with a property show in the following table, the Department tests under the corresponding test methods shown:

Table 1: Typical Test Methods

PROPERTY	TEST METHOD
Relative Compaction	ASTM D2922 and D3017
Sand Equivalent	CT 217
Resistance (R-Value)	CT 301
Grading (sieve analysis)	CT 202
Durability Index	CT 229

END OF SECTION

SECTION 7 LEGAL RELATIONS AND RESPONSIBILITY TO THE PUBLIC

7.A GENERAL

Attention is directed to the provisions in Section 7, ”Legal Relations and Responsibility to the Public” of the Standard Specifications and these Special Provisions.

7.B PREVAILING WAGE

If there is a difference between the minimum wage rates predetermined by the Secretary of Labor and the general prevailing wage rates determined by the Director of the California Department of Industrial Relations for similar classifications of labor the Contractor and subcontractors shall pay not less than the higher wage rate. See Section IV of the Federal provisions.

The general prevailing wage rates determined by the Director of Industrial Relations, for the county or counties in which the work is to be done, are available at the Department of Public Works address. Changes, if any, to the general prevailing wage rates will be available at the same location.

The federal minimum wage rates are available directly from Department of Labor Home Page at:

http://www.wdol.gov/dba.aspx#0

The minimum wage rates for the Director of the California Department of Industrial Relations can be found at:

http://www.dir.ca.gov/DLSR/PWD/index.htm

The Department does not utilize a Labor Compliance Plan, and therefore California Labor Code 1771.6 shall apply to this project.

7.B-1 WAGES

Refer to Section 7-1.02K(2) “Wages” of the Standard Specifications.

Replace "$50" in the 1st sentence in the 6th paragraph of section 7-1.02K(2) with:

$200

7.C CERTIFIED PAYROLL RECORDS

Electronic submittal of certified payroll records in Section 7-1.02K(3) “Certified Payroll Records” of the Standard Specifications are amended to delete electronic (email) submittal provisions. Electronic submittals of certified payroll records will not be accepted. Submittals shall be original hard copies of required documents. Submittal of payroll records shall continue to be submitted on a weekly basis as specified in the Standard Specifications.

7.D PUBLIC SAFETY

Section 7-1.04, “Public Safety” of the Standard Specifications are amended so that all work related to covering, maintaining and removing sign covers on all signs shall not be change order work, but shall be included in the contract price paid for various bid items and no additional compensation will be allowed therefor.

7.E INDEMNIFICATION - GENERAL

The provisions of Section 7-1.05A, “General” of the Standard Specifications shall be changed to read as follows:

You must defend, indemnify, and save harmless the County of Tehama, including its officers, employees, and agents (excluding agents who are design professionals), from any and all claims, demands, causes of action, damages, costs, expenses, actual attorneys' fees, losses or liabilities, in law or in equity (Section 7-1.05 “Claims”) arising out of or in connection with your performance of this Contract for:

1. Bodily injury including, but not limited to, bodily injury, sickness or disease, emotional injury or death to persons, including, but not limited to, the public, any employees or agents of you, the State, or any other contractor; and
2. Damage to property of anyone including loss of use thereof; caused or alleged to be caused in whole or in part by any negligent or otherwise legally actionable act or omission of you or anyone directly or indirectly employed by you or anyone for whose acts you may be liable.

You must, at your own expense, defend any suit or action founded upon a claim of the foregoing.

Except as otherwise provided by law, these requirements apply regardless of the existence or degree of fault of the County. You are not obligated to indemnify the County for Claims arising from conduct delineated in Civil Code § 2782 and for Claims arising from any defective or substandard condition of the highway that existed at or before the start of work, unless this condition has been changed by the work or the scope of the work requires you to maintain existing highway facilities and the Claim arises from your failure to maintain. Your defense and indemnity obligation shall extend to Claims arising after the work is completed and accepted if the Claims are directly related to alleged acts or omissions by you that occurred during the course of the work. Any inspection of the work by the Department is not a waiver of full compliance with these requirements.

Your obligation to defend and indemnify is not excused because of your inability to evaluate liability or because you evaluate liability and determine that you are not liable. You must respond within 30 days to the tender of any Claim for defense and indemnity by the County, unless this time has been extended by the County. If you fail to accept or reject a tender of defense and indemnity within 30 days, in addition to any other remedy authorized by law, the Department may withhold such funds the County reasonably considers necessary for its defense and indemnity until disposition has been made of the Claim or until the Contractor accepts or rejects the tender of defense, whichever occurs first.

With respect to third-party claims against you, you waive all rights of any type to express or implied indemnity against the County, its officers, employees, or agents (excluding agents who are design professionals).

Nothing in the Contract is intended to establish a standard of care owed to any member of the public or to extend to the public the status of a third-party beneficiary for any of these indemnification specifications.

7.F INSURANCE

Attention is directed to the provisions in Section 7-1.06 “Insurance” and Section 7-1.06F “Policy Forms, Endorsements, and Certificates” of the Standard Specifications and the supplementary provisions herewithin.

The Commercial General Liability and Automobile Liability policies shall include, or be endorsed to include **“Tehama County, its elected officials, officers, employees and volunteers”** as an additional insured.

The certificate holder shall be “County of Tehama.”

7.G FEDERAL LAWS FOR FEDERAL-AID CONTRACTS

Replace Section 7-1.11, “Federal Laws for Federal-Aid Contacts” of the Standard Specifications with the provisions in this section.

7.G-1 FHWA- 1273

FORM FHWA-1273-- revised May 1, 2012, are the required contract provisions for Federal-Aid construction contracts. Attention is directed to the contract portion of the Bid Book for these provisions.

7.G-2 FEMALE AND MINORITY GOALS

To comply with Section II, "Nondiscrimination," of "Required Contract Provisions Federal-Aid Construction Contracts," the following female and minority utilization goals for Federal-aid construction contracts and subcontracts that exceed $10,000.

The nationwide goal for female utilization is 6.9 percent.

The goals for minority utilization [45 Fed Reg 65984 (10/3/1980)] are as follows:

MINORITY UTILIZATION GOALS

ECONOMIC AREA		GOAL (PERCENT)
174	Redding CA: Non-SMSA Counties: CA Lassen; CA Modoc; CA Plumas; CA Shasta; CA Siskiyou; CA Tehama	6.8

For each July during which work is performed under the contract, you and each non-material-supplier subcontractor with a subcontract of $10,000 or more must complete Form FHWA PR-1391 (Appendix C to 23 CFR 230). Submit the forms by August 15.

7.G-3 FEDERAL TRAINEE PROGRAM

For the Federal training program, the number of trainees or apprentices is **-0-**.

This section applies if a number of trainees or apprentices is specified in the special provisions.

As part of your equal opportunity affirmative action program, provide on-the-job training to develop full journeymen in the types of trades or job classifications involved.

You have primary responsibility for meeting this training requirement.

If you subcontract a contract part, determine how many trainees or apprentices are to be trained by the subcontractor.

Include these training requirements in your subcontract.

Where feasible, 25 percent of apprentices or trainees in each occupation must be in their 1st year of apprenticeship or training.

Distribute the number of apprentices or trainees among the work classifications on the basis of your needs and the availability of journeymen in the various classifications within a reasonable recruitment area.

Before starting work, submit to the Department:

1. Number of apprentices or trainees to be trained for each classification
2. Training program to be used
3. Training starting date for each classification

Obtain the Department's approval for this submitted information before you start work. The Department credits you for each apprentice or trainee you employ on the work who is currently enrolled or becomes enrolled in an approved program.

The primary objective of this section is to train and upgrade minorities and women toward journeymen status. Make every effort to enroll minority and women apprentices or trainees, such as conducting systematic and direct recruitment through public and private sources likely to yield minority and women apprentices or trainees, to the extent they are available within a reasonable recruitment area. Show that you have made the efforts. In making these efforts, do not discriminate against any applicant for training.

Do not employ as an apprentice or trainee an employee:

1. In any classification in which the employee has successfully completed a training course leading to journeyman status or in which the employee has been employed as a journeyman
2. Who is not registered in a program approved by the US Department of Labor, Bureau of Apprenticeship and Training

Ask the employee if the employee has successfully completed a training course leading to journeyman status or has been employed as a journeyman. Your records must show the employee's answers to the questions.

In your training program, establish the minimum length and training type for each classification. The Department and FHWA approves a program if one of the following is met:

1. It is calculated to:
   - Meet the your equal employment opportunity responsibilities
   - Qualify the average apprentice or trainee for journeyman status in the classification involved by the end of the training period
2. It is registered with the U.S. Department of Labor, Bureau of Apprenticeship and Training, and it is administered in a way consistent with the equal employment responsibilities of Federal-aid highway construction contracts

Obtain the State's approval for your training program before you start work involving the classification covered by the program.

Provide training in the construction crafts, not in clerk-typist or secretarial-type positions. Training is allowed in lower level management positions such as office engineers, estimators, and timekeepers if the training is oriented toward construction applications. Training is allowed in the laborer classification if significant and meaningful training is provided and approved by the division office. Off-site training is allowed if the training is an integral part of an approved training program and does not make up a significant part of the overall training.

The Department reimburses you 80 cents per hour of training given an employee on this contract under an approved training program:

1. For on-site training
2. For off-site training if the apprentice or trainee is currently employed on a Federal-aid project and you do at least one of the following:
   - Contribute to the cost of the training
   - Provide the instruction to the apprentice or trainee
   - Pay the apprentice's or trainee's wages during the off-site training period
3. If you comply this section.

Each apprentice or trainee must:

1. Begin training on the project as soon as feasible after the start of work involving the apprentice's or trainee's skill
2. Remain on the project as long as training opportunities exist in the apprentice's or trainee's work classification or until the apprentice or trainee has completed the training program

Furnish the apprentice or trainee:

1. Copy of the program you will comply with in providing the training
2. Certification showing the type and length of training satisfactorily completed

Maintain records and submit reports documenting your performance under this section.

END OF SECTION

SECTION 8 PROSECUTION AND PROGRESS

8.A GENERAL

Attention is directed to the provisions in Section 8,"Prosecution and Progress" of the Standard Specifications and these Special Provisions.

8.B SCHEDULE

Contractor shall adhere to "Level 1 Critical Path Method Schedule" provisions in Section 8-1.02B of the Standard Specifications.

Replace "working days" in the 1st paragraph of section 8-1.02B(1) with:

original working days

8.C PRECONSTRUCTION CONFERENCE

Attend a preconstruction conference with key personnel, including your assigned representative, at a time and location determined by the Engineer. Submit documents as required before the preconstruction conference. You may start work before the preconstruction conference.

Be prepared to discuss the topics and documents shown in the following table:

Table 2: Preconstruction Topic Table

TOPICS	DOCUMENT OR DESCRIPTION
Potential claim and dispute resolution	Potential claim forms
Contractor's representation	Assignment of Contractor's representative
DBE	Final utilization reports and other requirements
Equipment	Equipment list
Labor compliance and equal employment opportunity	Job site posters and benefit and payroll reports
Material inspection	Notice of Materials to be Used
Materials on hand	Request for Payment for Materials on Hand
Measurements	--
Landscape Materials	Material changes
Quality control	QC plans and protocol
Safety	Injury and Illness Prevention Program and job site posters
Schedule	Baseline schedule and Weekly Statement of Working Days
Subcontracting	Subcontracting Request
Surveying	Survey Request
Traffic control	Traffic contingency plan and traffic control plans
Utility work	Locating, potholing, timing of work
Project Limits/ Adjacent Properties	--
Water pollution control	SWPPP or WPCP
Weight limitations	
Work restrictions	PLACs (Permits, License, Approvals, and Certificates)
Record drawings	--
Action submittals	--

8.D BEGINNING OF WORK, TIME OF COMPLETION AND LIQUIDATED DAMAGES

8.D-1 BEGINNING OF WORK

Work shall commence in accordance with these Special Provisions.

Start job site activities within 15 calendar days of the issuance of the Notice to Proceed.

All contract documents must be satisfactorily executed as described in Section 3.H , "Contract Execution" prior to issuance of the Notice to Proceed.

Contract time will start after the issuance of the Notice to Proceed and the first charged working day will be THE EARLIER OF EITHER the start of job site activities, OR 15 calendar days after the issuance of the Notice to Proceed. Submit a notice 72 hours before starting job site activities. If the project has more than 1 location of work, submit a separate notice for each location. The Department does not adjust contract time for starting before the 1st working day.

Contractor is encouraged to start the pre-construction submittal and approval process after the issuance of the Notice of Award.

Do not start job site activities until the Department authorizes or accepts your submittal for:

1. Contractor-supplied biologist, if applicable
2. Biological resource information program, if applicable
3. CPM baseline schedule

4. WPCP or SWPPP, whichever applies
5. Notification DRL, DRA or DRB nominee and disclosure statement

You may enter the job site only to measure controlling field dimensions and locating utilities.

Do not start other job site activities until all the submittals from the above list are received and authorized and the following information is received by the Engineer:

1. Notice of Materials To Be Used.
2. Contingency plan for reopening closures to public traffic.
3. Written statement from the vendor that the order for the sign panels has been received and accepted by the vendor. The statement must show the dates that the materials will be shipped.
4. Written statement from the vendor that the order for electrical material has been received and accepted by the vendor. The statement must show the dates that the materials will be shipped.
5. Written statement from the vendor that the order for structural steel has been received and accepted by the vendor. The statement must show the dates that the materials will be shipped.

If the Contract is not approved, leave the job site in a neat condition. If a facility has been changed, restore it to its former condition or an equivalent condition. The Department does not pay for the restoration.

8.D-2 TIME OF COMPLETION

This work shall be diligently prosecuted to completion before the expiration of 75 working days after the date provided in Section 8.D "Beginning of Work".

8.D-3 LIQUIDATED DAMAGES

The provisions of Section 8-1.10A, "General" of the Standard Specifications shall be changed to read as follows:

The Contractor shall pay to the County of Tehama the sum of **Three Thousand Dollars ($3,000)** per **day**, for each and every calendar day's delay in finishing the work in excess of the number of working days prescribed herein. Liquidated damages, if any, accrue starting on the 1st day after the expiration of the working days through the day of Contract acceptance except as specified in sections 8-1.10B and 8-1.10C. The Department withholds liquidated damages before the accrual date if the anticipated liquidated damages may exceed the value of the remaining work.

If all work except plant establishment is complete and the total number of working days have expired, liquidated damages are $950 per day.

8.E SUSPENSIONS

Refer to Section 8-1.06, "Suspensions" of the Standard Specifications.

Replace the headings and paragraphs in section 8-1.06 with:

The Engineer may suspend work wholly or in part due to conditions unsuitable for work progress. Provide for public safety and a smooth and unobstructed passageway through the work zone during the suspension as specified under sections 7-1.03 and 7-1.04. Providing the passageway is force account work. The Department makes a time adjustment for the suspension due to a critical delay.

The Engineer may suspend work wholly or in part due to your failure to (1) fulfill the Engineer's orders, (2) fulfill a Contract part, or (3) perform weather-dependent work when conditions are favorable so that weather-related unsuitable conditions are avoided or do not occur. The Department may provide for a smooth and unobstructed passageway through the work during the suspension and deduct the cost from payments. The Department does not make a time adjustment for the suspension.

Upon the Engineer's order of suspension, suspend work immediately. Resume work when ordered.

1. If the performance of all or any portion of the work is suspended or delayed by the engineer in writing for an unreasonable period of time (not originally anticipated, customary, or inherent to the construction industry) and the contractor believes that additional compensation and/or contract time is due as a result of such

suspension or delay, the contractor shall submit to the engineer in writing a request for adjustment within 7 calendar days of receipt of the notice to resume work. The request shall set forth the reasons and support for such adjustment.

2. Upon receipt, the engineer will evaluate the contractor's request. If the engineer agrees that the cost and/or time required for the performance of the contract has increased as a result of such suspension and the suspension was caused by conditions beyond the control of and not the fault of the contractor, its suppliers, or subcontractors at any approved tier, and not caused by weather, the engineer will make an adjustment (excluding profit) and modify the contract in writing accordingly. The contractor will be notified of the engineer's determination whether or not an adjustment of the contract is warranted.
3. No contract adjustment will be allowed unless the contractor has submitted the request for adjustment within the time prescribed.
4. No contract adjustment will be allowed under this clause to the extent that performance would have been suspended or delayed by any other cause, or for which an adjustment is provided or excluded under any other term or condition of this contract.

8.F DELAYS

Refer to Section 8-1.07, "Delays" of the Standard Specifications. Replace the 1st sentence in the 1st paragraph of section 8-1.07B with:

For a critical delay, the Department may make a time adjustment.

Add to the end of section 8-1.07C:

The Department does not make a payment adjustment for overhead incurred during non–working days that extend the Contract into an additional construction season.

Replace the 1st paragraph of section 8-1.07C with:

For an excusable delay that affects your costs, the Department may make a payment adjustment.

END OF SECTION

SECTION 9 PAYMENT

9.A GENERAL

Attention is directed to the provisions in Section 9, "Payment" of the Standard Specifications and these Special Provisions.

9.B PAYMENT SCOPE

Attention is directed to the provisions in Section 9-1.03 "Payment Scope" of the Standard Specifications, and the following amendments:

Add to the list in the 1st paragraph of section 9-1.03:

3. Any royalties and costs arising from patents, trademarks, and copyrights involved in the work

Replace item 1 in the 3rd paragraph of section 9-1.03 which describes payments with:

1. Full compensation for all work involved in each bid item shown on the Bid Item List by the unit of measure shown for that bid item

9.C FORCE ACCOUNT

Attention is directed to the provisions in Section 9-1.04A "Force Account" of the Standard Specifications, and the following amendments:

Replace "in" in the 3rd paragraph of section 9-1.04A with:

for

9.D PAYMENT ADJUSTMENTS FOR PRICE INDEX FLUCTUATIONS

Attention is directed to the provisions in Section 9-1.07 of the Standard Specifications for payment adjustments, and the following amendments.

Delete ", Huntington Beach," in the 3rd paragraph of section 9-1.07A.

Replace the formula in section 9-1.07B(2) with:

$Qh = HMATT \times Xa$

Replace "weight of dry aggregate" in the definition of the variable Xa in section 9-1.07B(2) with:

total weight of HMA

Replace the formula in section 9-1.07B(3) with:

$Qrh = RHMATT \times 0.80 \times Xarb$

Replace "weight of dry aggregate" in the definition of the variable Xarb in section 9-1.07B(3) with:

total weight of rubberized HMA

Replace the heading of section 9-1.07B(4) with:

Hot Mix Asphalt with Modified Asphalt Binder

Add between "in" and "modified" in the introductory clause of section 9-1.07B(4):

HMA with

Replace the formula in section 9-1.07B(4) with:

$Qmh = MHMATT \times [(100 - Xam) / 100] \times Xmab$

Replace "weight of dry aggregate" in the definition of the variable Xmab in section 9-1.07B(4) with:

total weight of HMA

Replace the formula in section 9-1.07B(5) with:

$Qrap = HMATT \times Xaa$

Replace "weight of dry aggregate" in the definitions of the variables Xaa and Xta in section 9-1.07B(5) with:

total weight of HMA

Add after the variable definitions in section 9-1.07B(9):

The quantity of extender oil is included in the quantity of asphalt.

9.E PROGRESS PAYMENTS

In addition to the provisions in Section 9-1.16A "General" in the Standard Specifications, "Retention" is additionally reflected in progress payments.

9.E-1 MOBILIZATION

Attention is directed to Section 9-1.16D "Mobilization" of the Standard Specifications and is amended to include the provisions in this Section.

The Department makes partial payments for Mobilization costs which shall adhere to Public Contract Code § 10264 as follows and not to exceed the following:

- When 5 percent of the original contract amount is earned, 50 percent of the amount bid for mobilization, or 5 percent of the original contract amount, whichever is lesser, may be paid.
- When 10 percent of the original contract amount is earned, 75 percent of the amount bid for mobilization or 7.5 percent of the original contract amount, whichever is lesser, may be paid.
- When 20 percent of the original contract amount is earned, 95 percent of the amount bid for mobilization, or 9.5 percent of the original contract amount, whichever is lesser, may be paid.
- When 50 percent of the original contract amount is earned, 100 percent of the amount bid for mobilization, or 10 percent of the original contract amount, whichever is lesser, may be paid.

Upon completion of all work on the project, payment of any amount bid for mobilization in excess of 10 percent of the original contract amount will be paid.

The adjustment provisions in Section 4-1.05 "Changes and Extra Work" of the Standard Specifications and the retention of payment provisions in Section 9.E-3 "Retention" shall not apply to the contract lump sum item of mobilization.

When other contract bid item(s) are adjusted as provided in Section 4-1.05 "Changes and Extra Work" of the Standard Specifications, if the costs applicable to an item of work include mobilization costs, those mobilization costs will be deemed to have been recovered by the Contractor by the payments made for mobilization, and will be excluded from consideration in determining compensation under said Section 4-1.05.

If the Contract does not include a mobilization bid item, mobilization is included in the payment of the various bid items involved.

9.E-2 WITHHOLDS

Refer to Section 9-1.16E "Withholds" of the Standard Specifications.

Delete "revised Contract" in item 1 of the 1st paragraph of section 9-1.16E(2).

9.E-3 RETENTION

Section 9-1.16F "Retentions" of the Standard Specifications is replaced with the following:

Pursuant to Public Contract Code § 7201, the County shall retain **five percent (5%)** of Progress Payments as part security for the fulfillment of the contract by the Contractor, and shall monthly pay to the Contractor, while carrying on the work, the balance not retained as aforesaid, after deducting therefrom all previous payments and all sums to be kept or retained under the provision of the contract. No such estimate or payment shall be required to be made when, in the judgment of the Engineer, the work is not proceeding in accordance with the provisions of the contract.

For federally funded projects, release of retention shall adhere to Section 9.G , "Prompt Payment of Funds Withheld to Subcontractors" of these Special Provisions.

9.F PROPOSED FINAL ESTIMATE

Refer to Section 9-1.17C "Proposed Final Estimate" of the Standard Specifications.

Replace the 2nd paragraph of section 9-1.17C with:

Submit either a written acceptance of the proposed final estimate or a claim statement postmarked or hand delivered before the 31st day after receiving the proposed final estimate.

Add between "the" and "final estimate" in the 1st sentence in the 3rd paragraph of section 9-1.17C:

proposed

9.G PROMPT PAYMENT OF FUNDS WITHHELD TO SUBCONTRACTORS

The agency shall hold retainage from the prime contractor and shall make prompt and regular incremental acceptances of portions, as determined by the agency, of the contract work, and pay retainage to the prime contractor based on these acceptances. The prime contractor, or subcontractor, shall return all monies withheld in retention from a subcontractor within 30 days after receiving payment for work satisfactorily completed and accepted including incremental acceptances of portions of the contract work by the agency. Federal law (49CFR26.29) requires that any delay or postponement of payment over 30 days may take place only for good cause and with the agency's prior written approval. Any violation of this provision shall subject the violating prime contractor or subcontractor to the penalties, sanctions and other remedies specified in Section 7108.5 of the Business and Professions Code. These requirements shall not be construed to limit or impair any contractual, administrative, or judicial remedies otherwise available to the prime contractor or subcontractor in the event of a dispute involving late payment or nonpayment by the prime contractor, deficient subcontract performance, or noncompliance by a subcontractor.

9.H PROMPT PROGRESS PAYMENT TO SUBCONTRACTORS

A prime contractor or subcontractor shall pay any subcontractor not later than 7 days of receipt of each progress payment in accordance with the provision in Section 7108.5 of the California Business and Professions Code concerning prompt payment to subcontractors. The 7 days is applicable unless a longer period is agreed to in writing. Any delay or postponement of payment over 30 days may take place only for good cause and with the agency's prior written approval. Any violation of Section 7108.5 shall subject the violating contractor or subcontractor to the penalties, sanction and other remedies of that section. This requirement shall not be construed to limit or impair any contractual, administrative, or judicial remedies otherwise available to the contractor or subcontractor in the event of a dispute involving late payment or nonpayment by the prime contractor, deficient subcontract performance, or noncompliance by a subcontractor.

9.I QUANTITIES OF AGGREGATE AND OTHER ROADWAY MATERIALS

Attention is directed to Section 9-1.02D "Quantities of Aggregate and Other Roadway Materials" of the Standard Specifications. This section will not be used unless the Engineer deems necessary to determine water weight of material.

9.J ARBITRATION

Section 9-1.22 "Arbitration" of the Standard Specifications is deleted in its entirety. All unresolved claims shall be resolved in a court of competent jurisdiction located in the County of Tehama. Any reference in the Standard Specifications to arbitration shall be deemed to refer to such litigation in a court of competent jurisdiction

END OF SECTION

SECTION 10 GENERAL

10.A WORK SEQUENCING

Before obliterating any traffic stripes, pavement markings, and pavement markers to be replaced at the same location, reference the stripes, markings, and markers. Include limits and transitions with control points to reestablish the new stripes, markings, and markers.

Construction of the new structural section adjacent to the existing traveled way must be performed in successive and once all operations are under way concurrent operations of excavating, preparing subgrade, placing base

materials, and paving. Excavation within 8 feet of the existing traveled way must not precede the paving operation by more than 2 working days unless:

1. Authorized
2. Material is placed and compacted against the vertical cuts within 8 feet of the existing traveled way. During excavation operations, native material may be used for this purpose except once the placing of the structural section starts, structural material must be used. Place the material up to the top of the existing pavement and taper at a slope of 4:1 (horizontal:vertical) or flatter to the bottom of the excavation. Do not use treated base for the taper.

At the end of each working day if a difference in excess of 0.2 feet exists between the elevation of the existing pavement and the elevation of an excavation within 8 feet of the traveled way, place and compact material against the vertical cut adjacent to the traveled way. During the excavation operation, you may use native material for this purpose except once the placing of the structural section starts, structural material must be used. Place the material up to the top of the existing pavement and taper at a slope of 4:1 (horizontal:vertical) or flatter to the bottom of the excavation. Do not use treated base for the taper.

END OF SECTION

SECTION 11 QUALITY CONTROL AND ASSURANCE

Attention is directed to Section 11 “Quality Control and Assurance” of the Standard Specifications.

END OF SECTION

SECTION 12 TEMPORARY TRAFFIC CONTROL

Attention is directed to Section 12 “Temporary Traffic Control” of the Standard Specifications.

12.A FLAGGING COSTS

Section 12-1.03 “Flagging Costs” of the Standard Specifications is hereby deleted. All flagging costs will be totally (100%) borne by the contractor and no division of costs will be made therefor.

12.B TRAFFIC-HANDLING EQUIPMENT AND DEVICES

Refer to Section 12-3, “Traffic-Handling Equipment and Devices” of the Standard Specifications.

Replace the 1st paragraph of section 12-3.01A(4) with:

Category 2 temporary traffic control devices must be on FHWA's list of acceptable, crashworthy Category 2 hardware for work zones. This list is available on FHWA's Safety Program Web site.

Replace "project" in the 4th paragraph of section 12-3.02C with:

Work

Add after "Display" in item 4 in the list in the 2nd paragraph of section 12-3.03B:

or Alternating Diamond

Replace "project" in the 3rd paragraph of section 12-3.07C with:

Work

12.B-1 CONSTRUCTION AREA SIGNS

Refer to Section 12-3.06, “Construction Area Signs” of the Standard Specifications.

12.B-2 PORTABLE CHANGEABLE MESSAGE SIGNS

Refer to Section 12-3.12 “Portable Changeable Message Signs” of the Standard Specifications.

12.B-2.a CONSTRUCTION

Refer to Section 12-3.12C "Construction" of the Standard Specifications and add the following:

If shown or directed, place the portable changeable message sign in advance of the 1st warning sign for each:

1. Stationary lane closure
2. Off-ramp closure
3. Connector closure
4. Shoulder closure
5. Speed reduction zone

12.C MAINTAINING TRAFFIC

Refer to Section 12-4, "Maintaining Traffic" of the Standard Specifications.

12.C-1 CLOSURE REQUIREMENTS

Add the following provisions to Section 12-4.02A "General" of the Standard Specifications:

If work including installing, maintaining, and removing Type K temporary railing is to be performed within 6 feet of the adjacent traffic lane, close the adjacent traffic lane.

Except as listed above, closure of the adjacent traffic lane is not required for installing, maintaining, and removing traffic control devices.

For grinding and grooving operations, sawcutting concrete slabs, and installing loop detectors with an impact attenuator vehicle as a shadow vehicle, closure of the adjacent traffic lane is not required.

Traffic shall be maintained using 1-way reversing traffic control operations. All construction activities shall be planned and executed to comply with this provision. Traffic may be stopped in 1 direction for periods not to exceed **15 minutes**. After each stoppage, all accumulated traffic for that direction must pass through the work zone before another stoppage is made.

Personal vehicles of your employees must not be parked on the traveled way or shoulders, including sections closed to traffic.

If work vehicles or equipment are parked within 6 feet of a traffic lane, close the shoulder area with fluorescent orange traffic cones or portable delineators. Place the cones or delineators on a taper in advance of the parked vehicles or equipment and along the edge of the pavement at 25-foot intervals to a point not less than 25 feet past the last vehicle or piece of equipment. Use at least 9 cones or delineators for the taper. Use a W20-1, "Road Work Ahead," W21-5b, "Right/Left Shoulder Closed Ahead," or C24(CA), "Shoulder Work Ahead," sign mounted on a crashworthy, portable sign support with flags. The sign must be placed as ordered by the Engineer and at least 48 by 48 inches in size. If a cone or delineator is displaced or overturned, immediately restore the device to its original position or location.

A minimum of 1 traffic lane not less than **10** feet wide must be open for use by traffic in each direction of travel.

Replace the 7th through 9th paragraphs of section 12-4.02A with:

If pedestrian traffic is allowed to pass through construction areas, provide a temporary pedestrian facility through the construction areas within the highway. Include protective overhead covering as necessary to ensure protection from falling objects and drippings from overhead structures.

At locations where pedestrian openings through falsework are required, provide a temporary pedestrian facility with protective overhead covering during all bridge construction activities.

Temporary pedestrian facilities must comply with section 12-7 of the Standard Specifications.

If an activity requires a closure of a walkway, another walkway must be made available nearby, off of the traveled way.

12.C-2 CLOSURE SCHEDULE AND CONDITIONS

Add between the 7th and 8th paragraphs of section 12-4.03 of the Standard Specifications:

The contingency plan must identify the operations, equipment, processes, and materials that may fail and delay a reopening of a closure to traffic. List the additional or alternate equipment, materials, or workers necessary to ensure continuing operations and on-time opening of closures whenever a problem occurs. If the additional or alternate equipment, materials, or workers are not on site, specify their location, the method for mobilizing these items, and the required time to complete mobilization.

Based on the Engineer's review, additional materials, equipment, workers, or time to complete operations from that specified in the contingency plan may be required.

Provide a general time-scaled logic diagram displaying the major activities and sequence of planned operations that comply with the requirements of section 12-4.03. For each operation, identify the critical event when the contingency plan will be activated.

Submit any revisions to the contingency plan for an operation at least 3 business days before starting that operation. Do not close any lanes until the contingency plan has been authorized.

The 5th paragraph of section 5-1.23B(1) of the Standard Specifications does not apply to reviewing contingency plans:

12.D TRAFFIC CONTROL SYSTEM FOR LANE CLOSURE

Replace Section 12-5 "Traffic Control System For Lane Closure" of the Standard Specifications with the following:

12.D-1 GENERAL

Section 12.D includes specifications for closing traffic lanes with stationary lane closures on 2-lane, two-way highways. **Standard Plan T13 shall apply.**

A traffic control system for a closure includes the temporary traffic control devices described as part of the traffic control system. The temporary traffic control devices must comply with Section 12-3 of the Standard Specifications.

12.D-2 MATERIALS

Not Used

12.D-3 CONSTRUCTION

Whenever components of the traffic control system are displaced or cease to operate or function as specified from any cause, immediately repair the components to the original condition or replace the components and restore the components to the original location.

For a stationary lane closure made only for the work period, remove the components of the traffic control system from the traveled way and shoulder at the end of each work period except for portable delineators placed along open trenches or excavation adjacent to the traveled way. You may store the components at selected central locations designated by the Engineer within the limits of the highway.

For traffic under one-way control on unpaved areas, do not place the cones shown along the centerline.

You may use a pilot car to control traffic. If a pilot car is used for traffic control, placing the cones along the centerline is optional. The pilot car must have radio contact with personnel in the work area. Operate the pilot car through the traffic control zone at a speed not greater than 25 mph.

12.D-4 PAYMENT

A traffic control system for a lane closure is paid for as traffic control system. Flagging costs are paid for as specified in Section 12.A "Flagging Costs" of these Special Provisions.

The requirements in Section 4-1.05 of the Standard Specifications for payment adjustment do not apply to traffic control system. Adjustments in compensation for traffic control system will be made for an increase or decrease in traffic control work if ordered and will be made on the basis of the cost of the necessary increased or decreased

traffic control. The adjustment will be made on a force account basis for increased work and estimated on the same basis in the case of decreased work.

12.E TEMPORARY PAVEMENT DELINEATION

Replace Section 12-8 "Temporary Pavement Delineation" of the Standard Specifications with the following:

12.E-1 GENERAL

Section 12-8 includes specifications for placing, applying, maintaining, and removing temporary pavement delineation.

Painted traffic stripe used for temporary delineation must comply with section 84-3. Apply 1 or 2 coats.

Temporary signing for no–passing zones must comply with section 12-3.06.

12.E-2 MATERIALS

12.E-2.a GENERAL

Not Used

12.E-2.b TEMPORARY LANE LINE AND CENTERLINE DELINEATION

Temporary pavement markers must be the same color as the lane line or centerline markers being replaced. Temporary pavement markers must be one of the temporary pavement markers on the Authorized Material List for short-term day or night use, 14 days or less, or long-term day or night use, 180 days or less.

12.E-2.c TEMPORARY EDGE LINE DELINEATION

Temporary, removable, construction-grade striping and pavement marking tape must be one of the types on the Authorized Material List. Apply temporary, removable, construction-grade striping and pavement marking tape under the manufacturer's instructions.

12.E-3 CONSTRUCTION

12.E-3.a GENERAL

Whenever work activities obliterate pavement delineation, place temporary or permanent pavement delineation before opening the traveled way to traffic. Place lane line and centerline pavement delineation for traveled ways open to traffic. On multilane roadways, freeways, and expressways, place edge line delineation for traveled ways open to traffic.

Establish the alignment for temporary pavement delineation, including required lines or markers. Surfaces to receive an application of paint or removable traffic tape must be dry and free of dirt and loose material. Do not apply temporary pavement delineation over existing pavement delineation or other temporary pavement delineation. Maintain temporary pavement delineation until it is superseded or you replace it with a new striping detail of temporary pavement delineation or permanent pavement delineation.

Place temporary pavement delineation on or adjacent to lanes open to traffic for a maximum of 14 days. Before the end of the 14 days, place the permanent pavement delineation. If the permanent pavement delineation is not placed within the 14 days, replace the temporary pavement markers with additional temporary pavement delineation equivalent to the striping detail specified for the permanent pavement delineation for the area. The Department does not pay for the additional temporary pavement delineation.

When the Engineer determines the temporary pavement delineation is no longer required for the direction of traffic, remove the markers, underlying adhesive and removable traffic tape from the final layer of surfacing and from the existing pavement to remain in place. Remove temporary pavement delineation that conflicts with any subsequent or new traffic pattern for the area.

12.E-3.b TEMPORARY LANE LINE AND CENTERLINE DELINEATION

Whenever lane lines or centerlines are obliterated, the minimum lane line and centerline delineation must consist of temporary pavement markers placed longitudinally at intervals not exceeding 24 feet. The temporary pavement markers must be temporary pavement markers on the Authorized Material List for short-term day or night use, 14 days or less, or long-term day or night use, 180 days or less. Place temporary pavement markers under the manufacturer's instructions. Cement the markers to the surfacing with the adhesive recommended by the manufacturer, except do not use epoxy adhesive to place pavement markers in areas where removal of the markers will be required.

For temporary lane line or centerline delineation consisting entirely of temporary pavement markers, place the markers longitudinally at intervals not exceeding 24 feet.

Where removal of the white, 4-inch wide, lane line traffic stripe is not required, apply temporary painted traffic stripe and place clear retroreflective pavement markers for temporary lane line delineation. Temporary painted lane line delineation placed on portland cement concrete pavement must consist of a white traffic stripe supplemented by a black-contrast traffic stripe and clear retroreflective pavement markers. Place the temporary painted lane line and clear retroreflective pavement markers longitudinally at intervals not exceeding 48 feet. The black contrast stripe and clear retroreflective pavement markers may remain in place at locations where you will be placing permanent pavement delineation.

Where no-passing centerline pavement delineation is obliterated, install the following temporary no-passing zone signs before opening lanes to traffic. Install a W20-1, "Road Work Ahead," sign from 1,000 feet to 2,000 feet in advance of a no-passing zone. Install a R4-1, "Do Not Pass," sign at the beginning of a no-passing zone and at 2,000-foot intervals within the no-passing zone. For continuous zones longer than 2 miles, install a W7-3a or W71(CA), "Next ___ Miles," sign beneath the W20-1 sign. Install a R4-2, "Pass With Care," sign at the end of the no-passing zone. The Engineer determines the exact location of temporary no-passing zone signs. Maintain the temporary no-passing zone signs in place until you place the permanent no-passing centerline pavement delineation. Remove the temporary no-passing zone signs when the Engineer determines they are no longer required for the direction of traffic.

12.E-3.c TEMPORARY EDGE LINE DELINEATION

Whenever edge lines are obliterated on multilane roadways, freeways, and expressways, place edge line delineation for that area adjacent to lanes open to traffic consisting of (1) solid, 4-inch wide traffic stripe tape of the same color as the stripe being replaced, (2) traffic cones, (3) portable delineators or channelizers placed longitudinally at intervals not exceeding 100 feet. You may apply temporary painted traffic stripe where removal of the 4-inch wide traffic stripe will not be required.

The Engineer determines the lateral offset for traffic cones, portable delineators, and channelizers used for temporary edge line delineation. If traffic cones or portable delineators are used for temporary pavement delineation for edge lines, maintain the cones or delineators during hours of the day when the cones or delineators are being used for temporary edge line delineation.

Channelizers used for temporary edge line delineation must be an orange surface-mounted type. Cement channelizer bases to the pavement as specified in section 85 for cementing pavement markers to pavement except do not use epoxy adhesive to place channelizers on the top layer of the pavement. Channelizers must be one of the 36-inch, surface-mounted types on the Authorized Material List.

Remove the temporary edge line delineation when the Engineer determines it is no longer required for the direction of traffic.

12.E-4 PAYMENT

Not Used

END OF SECTION

SECTION 13 WATER POLLUTION CONTROL

Refer to Section 13 "Water Pollution Control" of the Standard Specifications.

13.A WATER POLLUTION CONTROL PROGRAM

This project qualifies for an Erosivity Waiver because the soil disturbance is anticipated to be between 1 and 5 acres and the R-factor is less than 5. The Erosivity Waiver and R-factor are described in the NPDES General Permit for Storm Water Discharges Associated with Construction and Land Disturbance Activities (Order No. 2009-0009-DWQ, NPDES No. CAS000002, as amended by Order No. 2010-0014-DWQ, as amended by Order No. 2012-0006-DWQ).

Schedule all soil disturbing activities, such as clearing and grubbing, roadway excavation, and embankment construction, to occur from March 15th to July 1st Deviation from this schedule may void the Erosivity Waiver.

THIS JOB IS RISK LEVEL 1.

Discharges of storm water from the project must comply with most current NPDES General Permit for "Storm Water Discharges Associated with Construction and Land Disturbance Activities" (Order No. 2009-0009-DWQ, NPDES No. CAS000002, as amended by Order No. 2010-0014-DWQ, as amended by Order No. 2012-0006-DWQ).

13.A DEFINITIONS AND ABBREVIATIONS

active and inactive areas: (1) Active areas have soil disturbing work activities occurring at least once within 14 days, and (2) Inactive areas are areas that have not been disturbed for at least 15 days.
BMPs: Best Management Practices are water pollution control practices.
construction phase: Construction phases are (1) Highway Construction including work activities for building roads and structures, (2) Plant Establishment including maintenance on vegetation installed for final stabilization, and (3) Suspension where work activities are suspended and areas are inactive.
CSMP: Construction Site Monitoring Program.
NAL: Numeric Action Level
NEL: Numeric Effluent Limit
NPDES: National Pollutant Discharge Elimination System
NOI: Notice of Intent
normal working hours: The hours you normally work on this project
Preparation Manual: The Department's "Storm Water Pollution Prevention Plan and Water Pollution Control Program Preparation Manual."
QSD: Qualified SWPPP Developer
QSP: Qualified SWPPP Practitioner
REAP: Rain Event Action Plan.
RWQCB: Regional Water Quality Control Board.
SAP: Sampling and Analysis Plan
SSC: Suspended Sediment Concentration
SWRCB: State Water Resources Control Board
SWPPP: Storm Water Pollution Prevention Plan
WDID: Waste Discharge Identification Number
WPC: Water Pollution Control
WPC Manager: Water Pollution Control Manager. The WPC Manager implements water pollution control work described in the SWPPP and oversees revisions and amendments to the SWPPP.

13.B JOB SITE MANAGEMENT

Contractor must maintain a clean job site and comply with the provision of Section 13-4 of the Standard Specifications as needed.

13.C TEMPORARY CONCRETE WASHOUT

Refer to Section 13-9 "Temporary Concrete Washout" of the Standard Specifications.

13.D PAYMENT

13.D-1 MAINTENANCE OF TEMPORARY ITEMS

Sections 13-5.04, 13-6.04, 13-7.04 of the Standard Specifications entitled "Payment" of the temporary sediment and erosion control measures is amended to delete cost sharing of maintaining temporary items. All costs to maintain temporary sediment and erosion control measures will be totally (100%) borne by the contractor and no division of costs will be made therefor.

The Department does not pay for items not used.

END OF SECTION

SECTION 14 ENVIRONMENTAL STEWARDSHIP

Attention is directed to Section 14 "Environmental Stewardship" of the Standard Specifications.

14.A DUST CONTROL

In addition to the provisions in Section 14-9.03A "Dust Control" of the Standard Specifications, the Contractor must comply with the requirements of the Tehama County Air Pollution Control District. If required, compliance may include submitting Dust Control Plan(s) and/or obtaining necessary permits.

14.A-1 PAYMENT

A fee may be required to obtain a fugitive dust permit. Full compensation for conforming to the provisions in the Section and the requirements of the permit, including the cost of the permit, shall be considered as included in the contract prices paid for the various items of work and no additional compensation will be allowed therefor.

END OF SECTION

SECTION 15 EXISTING FACILITIES

Refer to Section 15 "Existing Facilities" of the Standard Specifications and these Special Provisions.

Replace "Not Used" in Section 15-1.02 with:

All remover, replaced, or surplus materials of any type, quantity, or substance, except those to be salvaged, reconstructed, or reused, shall become your property and shall be removed from the site and disposed of in conformance with the provisions in Section 5-1.20B(4) of the Standard Specifications, unless directed otherwise by the Engineer.

15.A COLD PLANING ASPHALT CONCRETE PAVEMENT

Where portions of the surface are to remain in place, saw cut a neat line along the edge of the portion to remain in place before starting the removal operation.

Do not begin removal operations until after the roadway is no longer required for the passage of public traffic, unless otherwise directed by the Engineer.

Replace Section 15-2.02B(3) "Cold Planing Asphalt Concrete Pavement" of the Standard Specifications with the following:

15.A-1.a(i) General

1. Construct a temporary HMA taper to the level of the existing pavement

Schedule cold planing activities so that not more than 48 hours elapses between the time the pavement is cold planed and the HMA is placed.

15.A-1.a(ii) Materials

Use the same quality of HMA for temporary tapers that is used for the HMA overlay or comply with the specifications for minor HMA in Section 39.

15.A-1.a(iii) Construction

General

Do not use a heating device to soften the pavement.

The cold planing machine must be:

1. Equipped with a cutter head width that matches the planing width. If the cutter head width is wider than the cold plane area shown, submit to the Engineer a request for using a wider cutter head. Do not cold plane unless the Engineer approves your request.
2. Equipped with automatic controls for the longitudinal grade and transverse slope of the cutter head and:

2.1. If a ski device is used, it must be at least 30 feet long, rigid, and a 1-piece unit. The entire length must be used in activating the sensor.

2.2. If referencing from existing pavement, the cold planing machine must be controlled by a self-contained grade reference system. The system must be used at or near the centerline of the roadway. On the adjacent pass with the cold planing machine, a joint-matching shoe may be used.

3. Equipped to effectively control dust generated by the planing operation
4. Operated so that no fumes or smoke is produced.

Replace broken, missing, or worn machine teeth.

Grade Control and Surface Smoothness

Furnish, install, and maintain grade and transverse slope references.

The depth, length, width, and shape of the cut must be as shown or as ordered. The final cut must result in a neat and uniform surface. Do not damage the remaining surface.

The completed surface of the planed asphalt concrete pavement must not vary more than 0.02 foot when measured with a 12-foot straightedge parallel with the centerline. With the straightedge at right angles to the centerline, the transverse slope of the planed surface must not vary more than 0.03 foot.

Where lanes are open to traffic, the drop-off of between adjacent lanes must not be more than 0.15 foot.

Temporary HMA Tapers

If a drop-off between the existing pavement and the planed area at transverse joints cannot be avoided before opening to traffic, construct a temporary HMA taper. The HMA temporary taper must be:

1. Placed to the level of the existing pavement and tapered on a slope of 30:1 (horizontal:vertical) or flatter to the level of the planed area, or as shown.
2. Compacted by any method that will produce a smooth riding surface

Completely remove temporary tapers before placing permanent surfacing.

Remove Planed Material

Remove cold planed material concurrent with planing activities so that removal does not lag more than 50 feet behind the planer.

Stockpile

Material shall be stockpiled either onsite or another site approved by the Engineer. Stockpiling shall comply with water pollution control provisions and Standard Specifications.

15.A-1.b PAYMENT

Payment for removal of pavement markers, thermoplastic traffic stripe, painted traffic stripe, and pavement marking within the area of cold planing is included in the payment for cold plane asphalt concrete pavement of the types shown in the Bid Item List.

Payment includes hauling removed pavement to the County's storage facility.

Payment for removal of asphalt concrete includes conducting neat sawcut if a clean vertical edge is not provided or maintained prior to paving operations. Engineer must approve exclusion of sawcutting. Failure to get approval from the Engineer may result in performance withhold(s).

15.B CONCRETE REMOVAL

Refer to Section 15-3, "Concrete Removal" of the Standard Specifications.

15.C BRIDGE REMOVAL

Refer to Section 15-4, "Bridge Removal" of the Standard Specifications.

Included the remove the potion of bridge deck required for the replacement of joint seal assemblies.

15.D BRIDGE REHABILITATION

Refer to Section 15-5, "Bridge Rehabilitation" of the Standard Specifications, and these Special Provisions.

15.D-1 PREPARE CONCRETE DECK SURFACE

Refer to Section 15-5.01C(2), "Prepare Concrete Deck Surface" of the Standard Specifications.

Add to section 15-5.01C(2):

1. Use wherever high volume or high speed traffic exists.

When abrasive blasting within 10 feet of public traffic, remove residue using a vacuum attachment operating concurrently with the blasting equipment.

2. Use if there is no item of work for chip or slurry seal removal and incidental amounts of slurry or chip seal may be present on the deck.

The Engineer may direct you to remove existing slurry or chip seal contrast treatment. This is change order work.

15.D-2 REMOVE ASPHALT CONCRETE SURFACING

Refer to Section 15-5.01C(4), "Remove Asphalt Concrete Surfacing" of the Standard Specifications.

Replace the 3rd paragraph of section 15-5.01C(4) with:

Remove existing asphalt concrete surfacing and membrane seal by cold milling. Do not remove more than 1/4 inch of the existing concrete slab during cold-milling activities.

Add to section 15-5.01C(4):

Where a portion of the asphalt concrete overlay is to remain, saw cut a 2-inch-deep neat line along the edge to remain in place before removing asphalt concrete. Remove the asphalt surfacing without damaging the existing surfacing to remain in place.

15.D-3 BRIDGE DECK METHACRYLATE RESIN TREATMENT

Refer to Section 15-5.05, "Bridge Deck Methacrylate Resin Treatment" of the Standard Specifications.

Replace item 1 in the list in the 1st paragraph of section 15-5.05A(2) with:

1. Schedule of work for the test area and for each bridge

Add to section 15-5.05A(2):

Submit a public safety plan. Include with the submittal:

1. Public notification letter describing the work to be performed with treatment work locations, dates and times. Include a list of addresses of delivery and posting of the letter.
2. Airborne emissions monitoring plan. A CIH certified in comprehensive practice by the American Board of Industrial Hygiene must prepare and execute the plan. The plan must have at least 4 monitoring points including the mixing point, application point, and point of nearest public contact.
3. Action plan for protecting the public if airborne emissions levels exceed permissible levels.
4. Copy of the CIH's certification.

Submit results from airborne emissions monitoring of the test area before starting production work.

Submit results from production airborne emissions monitoring as an informational submittal after completing treatment activities.

Replace the paragraphs of section 15-5.05A(3) with:

Complete a test area before starting deck treatment activities. Notify the Engineer at least 15 days before treating the test area.

The test area must be:

1. At least 500 sq ft
2. Within the project limits outside the traveled way at an authorized location
3. Constructed (1) using the same materials, equipment, and construction methods to be used in the work and (2) under conditions similar to those anticipated when the work will be performed.
4. Demonstrate suitability of the airborne emissions monitoring plan

The completed test area must demonstrate (1) compliance with these specifications and (2) that the work will be completed within the time allowed.

The Engineer performs friction testing of the treated test area under California Test 342. Allow 10 days after completion of the test area for the Engineer to perform the test.

Do not perform deck treatment activities until the test area is authorized. The authorized test area is the standard of comparison in determining the acceptability of treated deck surfaces.

The Engineer may perform testing under California Test 342 to verify the coefficient of friction of the treated deck surfaces.

Add to section 15-5.05C:

Deliver the public notification letter to residences and businesses within 100 feet of treatment work and to local fire and police officials at least 7 days before starting treatment activities. Post the letter at the job site.

Monitor airborne emissions during treatment activities.

Replace the 6th paragraph of section 15-5.05C with:

Thoroughly mix all resin components. Apply resin to the deck within 5 minutes of mixing. The approximate application rate is 75 sq ft/gal. Resin that thickens during application is rejected.

Replace the 9th paragraph of section 15-5.05C with:

The coefficient of friction of the treated surface must be at least 0.35 when tested under California Test 342.

Traffic or equipment is not allowed on the treated surface until you have verified that the following conditions have been met and the Engineer has authorized the opening of the treated surface to traffic and equipment:

1. Treated deck surface is tack free and not oily
2. Sand cover adheres and resists brushing by hand
3. Excess sand and absorbent material has been removed
4. No material will be tracked beyond the limits of treatment by traffic

15.D-4 Polyester Concrete Overlay

Refer to Section 15-5.06, "Polyester Concrete Overlay" of the Standard Specifications, and these Special Provisions. Polestar Concrete Overlay shall be**: 3/4" thick**

Replace item 1 in the list in the 1st paragraph of section 15-5.06A(2) with:

1. Schedule of overlay work for the trial overlay and for each bridge

Add to section 15-5.06A(2):

Submit a public safety plan. The public safety plan must include:

1. Public notification letter with a list of delivery and posting addresses. The letter must describe the work to be performed and state treatment work locations, dates, and times. Deliver the letter to residences and businesses within 100 feet of the overlay work and to local fire and police officials at least 7 days before starting overlay activities. Post the letter at the job site.
2. Airborne emissions monitoring plan. A CIH certified in comprehensive practice by the American Board of Industrial Hygiene must prepare and execute the plan. The plan must have at least 4 monitoring points, including the mixing point, application point, and point of nearest public contact. Monitor airborne emissions during overlay activities.
3. Action plan for protecting the public if airborne emissions levels exceed permissible levels.
4. Copy of the CIH's certification.

Submit results from airborne emissions monitoring of the trial overlay before starting production work.

Submit results from production airborne emissions monitoring as an informational submittal after completing overlay activities.

Replace the paragraphs of section 15-5.06A(3) with:

Complete a trial polyester concrete overlay before starting overlay activities. Notify the Engineer at least 15 days before constructing the trial overlay.

The trial overlay must be:

1. At least 12 by 12 feet and the same thickness as the overlay shown
2. Constructed on a prepared concrete base within the project limits at an authorized location
3. Constructed (1) using the same materials, equipment, and construction methods to be used in the work and (2) under conditions similar to those anticipated when the work will be performed
4. Demonstrate the suitability of the airborne emissions monitoring plan

Use the trial overlay to determine the initial polyester-concrete set time.

The Engineer performs friction testing of the trial overlay under California Test 342. Allow 10 days after completion of the trial overlay for the Engineer to perform the testing.

The completed trial overlay must demonstrate (1) compliance with these specifications and (2) that the work will be completed within the time allowed.

Do not perform overlay activities until the trial overlay is authorized. The authorized trial overlay is the standard of comparison in determining the acceptability of the overlay.

The Engineer may perform testing under California Test 342 to verify the coefficient of friction of the overlay surfaces.

Dispose of the trial overlay and concrete base after acceptance of all polyester concrete overlay surfaces.

Replace the 8th paragraph of section 15-5.06C(1) with:

Finishing equipment for polyester concrete must:

1. Have grade control capabilities resulting in a roadway surface that meets the smoothness requirements of section 51-1.01D(4)(b) and is capable of adjusting for a variable thickness overlay along and across the existing deck surface. The use of fixed height skid-supported strike off equipment is not allowed.
2. Be used to consolidate the polyester concrete
3. Have a 12-foot minimum paving width

Replace the 13th paragraph of section 15-5.06C(1) with:

If no deck surface is removed, the approximate rate of application of methacrylate resin is 90 sq ft/gal

If deck surface is removed, he approximate rate of application of methacrylate resin is 55 sq ft/gal

Replace the 21st paragraph of section 15-5.06C(1) with:
Completed polyester concrete deck surfaces must have a uniform surface texture with a coefficient of friction of at least 0.35 when tested under California Test 342 and a surface smoothness complying with section 51-1.01D(4)(b).

END OF SECTION

SECTION 17 WATERING

Refer to Section 17, "Watering" of the Standard Specifications.

END OF SECTION

SECTION 22 FINISHING ROADWAY

Refer to Section 22, "Finishing Roadway" of the Standard Specifications.

END OF SECTION

SECTION 37 BITUMINOUS SEALS

Refer to Section 37, "Bituminous Seals" of the Standard Specifications.

END OF SECTION

SECTION 39 HOT MIX ASPHALT

Refer to Section 39, "Hot Mix Asphalt" of the Standard Specifications and the provisions within this section.

Hot Mix Asphalt must be **Type B, 1/2"** Aggregate Gradation, **PG 64-10** asphalt binder, and applied using the **Method** construction process.

Tack Coat shall be SS1/SS1h.

Total lift thickness shall be: **0.15'**

39.A GENERAL

Refer to Section 39-1.01, "General" of the Standard Specifications.

39.A-1 GENERAL

Add to section 39-1.01B:
processed RAP: RAP that has been fractionated.
substitution rate: Amount of RAP aggregate substituted for virgin aggregate in percent.
binder replacement: Amount of RAP binder in OBC in percent.
surface course : Upper 0.2 feet of HMA exclusive of OGFC.

39.A-2 MATERIALS

39.A-2.a AGGREGATE

Refer to Section 39-1.02E, "Aggregate" of the Standard Specifications.

Replace "less than 10 percent" in note "b" in the table titled "Aggregate Quality" of section 39-1.02E with:
"10 percent or less."

39.A-2.b RECLAIMED ASPHALT PAVEMENT

Refer to Section 39-1.02F, "Reclaimed Asphalt Pavement" of the Standard Specifications.

Replace the paragraphs in section 39-1.02F with:

39-1.02F(1) General

You may produce the specified HMA using RAP. HMA produced using RAP must comply with the specifications for HMA, except aggregate quality specifications do not apply to RAP. You may substitute RAP at a substitution rate not exceeding 25 percent of the aggregate blend. Do not use RAP in OGFC and RHMA-G.

Assign the substitution rate of RAP aggregate for virgin aggregate with the JMF submittal. The JMF must include the percent of RAP used.

Provide enough space for meeting RAP handling requirements at your facility. Provide a clean, graded, well-drained area for stockpiles. Prevent material contamination and segregation.

If RAP is from multiple sources, blend the RAP thoroughly and completely. RAP stockpiles must be homogeneous.

Isolate the processed RAP stockpiles from other materials. Store processed RAP in conical or longitudinal stockpiles. Processed RAP must not be agglomerated or be allowed to congeal in large stockpiles.

AASHTO T 324 (Modified) is AASHTO T 324, "Hamburg Wheel-Track Testing of Compacted Hot Mix Asphalt (HMA)," with the following parameters:

1. Target air voids must equal 7 ± 1 percent
2. Specimen height must be 60 mm ± 1mm
3. Number of test specimens must be 4
4. Test specimen must be a 150mm gyratory compacted specimen
5. Test temperature must be set at:
   5.1. 122 ± 2 degrees F for PG 58
   5.2. 131 ± 2 degrees F for PG 64
   5.3. 140 ± 2 degrees F for PG 70 and above
6. Measurements for impression must be taken at every 100 passes
7. Inflection point defined as the number of wheel passes at the intersection of the creep slope and the stripping slope
8. Testing shut off must be set at 25,000 passes

39-1.02F(2) Substitution Rate of 15 Percent or Less

For a RAP substitution rate of 15 percent or less, you may stockpile RAP during the entire project.

39-1.02F(3) Substitution Rate Greater than 15 Percent

For a RAP substitution rate greater than 15 percent, fractionate RAP into 2 sizes, a coarse fraction RAP retained on 3/8-inch screen and a fine fraction RAP passing 3/8-inch screen.

Sample and test processed RAP at a minimum frequency of 1 sample per 1000 tons with a minimum of 6 samples for each processed RAP stockpile. If a processed RAP stockpile is augmented, sample and test processed RAP quality characteristics at a minimum frequency of 1 sample per 500 tons of augmented RAP.

When tested under California Test 202 with a total mechanical shaking time of 10 minutes ±15 seconds, the processed RAP must meet the grading requirements shown in the following table:

Processed RAP Gradation
(Percentage Passing)

Sieve sizes	TV limits	Allowable tolerance
1/2"	100	--
3/8"	97	TV + 3

The processed RAP asphalt binder content must be within ± 2.0 percent of the average processed RAP stockpile asphalt binder content when tested under ASTM D 2172, Method B. If a new processed RAP stockpile is required, the average binder content of the new processed RAP stockpile must be within ± 2.0 percent of the average binder content of the original processed RAP stockpile.

The maximum specific gravity for processed RAP must be within ± 0.06 when tested under California Test 309 of the average maximum specific gravity reported on page 4 of your *Contractor Hot Mix Asphalt Design Data* form..

39.A-3 HOT MIX ASPHALT MIX DESIGN

39.A-3.a GENERAL

Refer to Section 39-1.03A, "General" of the Standard Specifications.

Replace items 7 and 8 in the 5th paragraph of section 39-1.03A with:

7. Substitution rate by more than 5 percent if your assigned RAP substitution rate is 15 percent or less
8. Substitution rate by more than 3 percent if your assigned RAP substitution rate is greater than 15 percent
9. Average binder content by more than 2 percent from the average binder content of the original processed RAP stockpile used in the mix design
10. Maximum specific gravity of processed RAP by more than ±0.060 from the average maximum specific gravity of processed RAP reported on page 4 of your Contractor Hot Mix Asphalt Design Data form
11. Any material in the JMF

Refer to Section 39-1.03B, "Hot Mix Asphalt Mix Design" of the Standard Specifications.

Replace the 1st paragraph of section 39-1.03B with:

Perform a mix design that produces HMA with the values for the quality characteristics shown in the following table:

HMA Mix Design Requirements

QUALITY CHARACTERISTIC	TEST METHOD	HMA TYPE		
		A	B	RHMA-G
Air void content (%)	California Test 367	4.0	4.0	Section 39-1.03B
Voids in mineral aggregate (% min.)	California Test 367			
No. 4 grading		17.0	17.0	--
3/8" grading		15.0	15.0	--
1/2" grading		14.0	14.0	18.0–23.0[a]
3/4" grading		13.0	13.0	18.0–23.0[a]
Voids filled with asphalt (%)	California Test 367			Note c
No. 4 grading		65.0–75.0	65.0–75.0	
3/8" grading		65.0–75.0	65.0–75.0	
1/2" grading		65.0–75.0	65.0–75.0	
3/4" grading		65.0–75.0	65.0–75.0	
Dust proportion	California Test 367			Note c
No. 4 and 3/8" gradings		0.6–1.2	0.6–1.2	
1/2" and 3/4" gradings		0.6–1.2	0.6–1.2	
Stabilometer value (min.) [b]	California Test 366			
No. 4 and 3/8" gradings		30	30	--
1/2" and 3/4" gradings		37	35	23

[a] Report this value in the JMF submittal.

For RAP substitution rate greater than 15 percent, the mix design must comply with the additional quality characteristics shown in the following table:

Additional HMA Mix Design Requirements for RAP Substitution Rate Greater Than 15 Percent

Quality characteristic	Test method	HMA type		
		A	B	RHMA-G
Hamburg wheel track (minimum number of passes at 0.5 inch average rut depth)	AASHTO T 324 (Modified)[a]			
PG-58		10,000	10,000	--
PG-64		15,000	15,000	
PG-70		20,000	20,000	
PG-76 or higher		25,000	25,000	
Hamburg wheel track (inflection point minimum number of passes)[f]	AASHTO T 324 (Modified)[a]			
PG-58		10,000	10,000	--
PG-64		10,000	10,000	
PG-70		12,500	12,500	
PG-76 or higher		15000	15000	
Moisture susceptibility (minimum dry strength, psi)	California Test 371[a]	120	120	--
Moisture susceptibility (tensile strength ration, %)	California Test 371[a]	70	70	--

[a]Test plant produced HMA.

For HMA with RAP, the maximum binder replacement must be 25.0 percent of OBC for surface course and 40.0 percent of OBC for lower courses.

For HMA with a binder replacement less than or equal to 25 percent of OBC, you may request that the PG asphalt binder grade with upper and lower temperature classifications be reduced by 6 degrees C from the specified grade.

For HMA with a binder replacement greater than 25 percent but less than or equal to 40 percent of OBC, you must use a PG asphalt binder grade with upper and lower temperature classifications reduced by 6 degrees C from the specified grade.

39.A-3.b JOB MIX FORMULA SUBMITTAL

Refer to Section 39-1.03C, "Job Mix Formula Submittal" of the Standard Specifications.

Replace item 4 in the list in the 1st paragraph of section 39-1.03C with:

3. JMF renewal on a Caltrans Job Mix Formula Renewal form, if applicable

Add after the last paragraph of section 39-1.03C:

For RAP substitution rate greater than 15 percent, submit with the JMF submittal:

1. California Test 371 tensile strength ratio and minimum dry strength test results
2. AASHTO T 324 (Modified) test results

For RAP substitution rate greater than 15 percent, submit California Test 371 and AASHTO T 324 (Modified) test results to the Engineer.

39.A-3.c JOB MIX FORMULA VERIFICATION

Refer to Section 39-1.03E, "Job Mix Formula Verification" of the Standard Specifications.

Replace the 2nd paragraph of section 39-1.03E with:

Use the OBC specified on your Contractor Hot Mix Asphalt Design Data form. No adjustments to asphalt binder content are allowed. Based on your testing and production experience, you may submit an adjusted aggregate gradation TV on a Contractor Job Mix Formula Proposal form before verification testing. Aggregate gradation TV must be within the TV limits specified in the aggregate gradation tables.

Add between the 3rd and 4th paragraphs of section 39-1.03E:

Asphalt binder set point for HMA must be the OBC specified on your Contractor Hot Mix Asphalt Design Data form. When RAP is used, asphalt binder set point for HMA must be:

$$\text{Asphalt Binder Set Point} = \frac{\dfrac{BC_{OBC}}{\left(1 - \dfrac{BC_{OBC}}{100}\right)} - R_{RAP}\left[\dfrac{BC_{RAP}}{\left(1 - \dfrac{BC_{RAP}}{100}\right)}\right]}{100 + \dfrac{BC_{OBC}}{\left(1 - \dfrac{BC_{OBC}}{100}\right)}}$$

Where:
BC_{OBC} = optimum asphalt binder content, percent based on total weight of mix
R_{RAP} = RAP ratio by weight of aggregate
BC_{RAP} = asphalt binder content of RAP, percent based on total weight of RAP mix

Replace item 4 in the list in the 8th paragraph of section 39-1.03E with:

4. HMA quality specified in the table titled "HMA Mix Design Requirements" except:
   4.1. Air void content, design value ±2.0 percent
   4.2. Voids filled with asphalt, report only
   4.3. Dust proportion, report only

Replace the 12th paragraph of section 39-1.03E with:

If tests on plant-produced samples do not verify the JMF, the Engineer notifies you and you must submit a new JMF or submit an adjusted JMF based on your testing. JMF adjustments may include a change in aggregate gradation TV within the TV limits specified in the aggregate gradation tables.

Replace the 14th paragraph of section 39-1.03E with:

A verified JMF is valid for 12 months.

Replace the last sentence in the 15th paragraph of section 39-1.03E with:

This deduction does not apply to verifications initiated by the Engineer or JMF renewal

Replace the 16th paragraph of section 39-1.03E with:

Except for RAP substitution rate greater than 15 percent, for any HMA produced under the QC/QA process the Department does not use California Test 371 test results for verification.

39.A-3.d JOB MIX FORMULA RENEWAL

Refer to Section 39-1.03F, "Job Mix Formula Verification" of the Standard Specifications.

Add between the 1st and 2nd paragraphs of section 39-1.03F:

Target asphalt binder content on your Contractor Job Mix Formula Proposal form and the OBC specified on your Contractor Hot Mix Asphalt Design Data form must be the same.

Delete the 4th paragraph of section 39-1.03F.

Replace items 3 and 5 in the list in the 6th paragraph of section 39-1.03F with:

3. Engineer verifies each proposed JMF renewal within 20 days of receiving verification samples.

5. For each HMA type and aggregate gradation specified, the Engineer verifies at the Department's expense 1 proposed JMF renewal within a 12-month period.

Add between the 6th and 7th paragraphs of section 39-1.03F:

The most recent aggregate quality test results within the past 12 months may be used for verification of JMF renewal or the Engineer may perform aggregate quality tests for verification of JMF renewal.

39.A-3.e JOB MIX FORMULA ACCEPTANCE

Refer to Section 39-1.03G, "Job Mix Formula Acceptance" of the Standard Specifications.

Replace section 39-1.03G with:

39-1.03G Job Mix Formula Modification

For an accepted JMF, you may change asphalt binder source one time during production.
Submit your modified JMF request a minimum of 3 business days before production. Each modified JMF submittal must consist of:

1. Proposed modified JMF on Contractor Job Mix Formula Proposal form
2. Mix design records on Contractor Hot Mix Asphalt Design Data form for the accepted JMF to be modified
3. JMF verification on Hot Mix Asphalt Verification form for the accepted JMF to be modified
4. Quality characteristics test results for the modified JMF as specified in section 39-1.03B. Perform tests at the mix design OBC as shown on the Contractor Asphalt Mix Design Data form
5. If required, California Test 371 test results for the modified JMF.

With an accepted modified JMF submittal, the Engineer verifies each modified JMF within 5 business days of receiving all verification samples. If California Test 371 is required, the Engineer tests for California Test 371 within 10 days of receiving verification samples.
The Engineer verifies the modified JMF after the modified JMF HMA is placed on the project and verification samples are taken within the first 750 tons following sampling requirements in section 39-1.03E, "Job Mix Formula Verification." The Engineer tests verification samples for compliance with:

1. Stability as shown in the table titled "HMA Mix Design Requirements"
2. Air void content at design value ±2.0 percent
3. Voids in mineral aggregate as shown in the table titled "HMA Mix Design Requirements"
4. Voids filled with asphalt, report only
5. Dust proportion, report only

If the modified JMF is verified, the Engineer revises your Hot Mix Asphalt Verification form to include the new asphalt binder source. Your revised form will have the same expiration date as the original form.
If a modified JMF is not verified, stop production and any HMA placed using the modified JMF is rejected.
The Engineer deducts $2,000 from payments for each modified JMF verification. The Engineer deducts an additional $2,000 for each modified JMF verification that requires California Test 371.

Add to section 39-1.03:

39-1.03H Job Mix Formula Acceptance

You may start HMA production if:
1. The Engineer's review of the JMF shows compliance with the specifications.
2. The Department has verified the JMF within 12 months before HMA production.
3. The Engineer accepts the verified JMF.

39.A-4 CONTRACTOR QUALITY CONTROL

39.A-4.a GENERAL

Refer to Section 39-1.04A, "General" of the Standard Specifications.

Replace "3 days" in the 1st paragraph of section 39-1.04A with:

3 business days

Replace the 2nd sentence in the 2nd paragraph of section 39-1.04A with:
During production, take samples under California Test 125. You may sample HMA from:

39.A-4.b RECLAIMED ASPHALT PAVEMENT

Refer to Section 39-1.04E, "Reclaimed Asphalt Pavement" of the Standard Specifications.

Replace "batch" in the 2nd sentence in the 2nd paragraph of section 39-1.04C with:
lot. Each asphalt binder lot consist of 1 or multiple batches of combined asphalt binder, asphalt modifier, and CRM proportioned under section 39-1.02D.

Replace the 2nd paragraph of section 39-1.04E with:
For RAP substitution rate of 15 percent or less, sample RAP once daily.
For RAP substitution rate of greater than 15percent, sample processed RAP twice daily.
Perform QC testing for processed RAP aggregate gradation under California Test 367, appendix B, and submit the results with the combined aggregate gradation.

39.A-5 DISPUTE RESOLUTION

Refer to Section 39-1.06, "Dispute Resolution" of the Standard Specifications.

Replace "5 days" in the 1st paragraph of section 39-1.06 with:
5 business days

39.A-6 PRODUCTION

39.A-6.a GENERAL

Refer to Section 39-1.08A, "General" of the Standard Specifications.

Replace the 3rd paragraph of section 39-1.08A with:
During production, you may adjust hot or cold feed proportion controls for virgin aggregate and RAP.

Add to section 39-1.08A:
During production, asphalt binder set point for HMA Type A, HMA Type B, HMA Type C, and RHMA-G must be the OBC shown in Contractor Hot Mix Asphalt Design Data form. For OGFC, asphalt binder set point must be the OBC shown on Caltrans Hot Mix Asphalt Verification form. If RAP is used, asphalt binder set point for HMA must be calculated as specified in section 39-1.03E.

For RAP substitution rate of 15 percent or less, you may adjust the RAP by -5 percent.
For RAP substitution greater than 15, you may adjust the RAP by -3 percent.

You must request adjustments to the plant asphalt binder set point based on new RAP stockpiles average asphalt binder content. Do not adjust the HMA plant asphalt binder set point until authorized.

39.A-6.b MIXING

Refer to Section 39-1.08B, "Mixing" of the Standard Specifications.

Replace the 3rd paragraph of section 39-1.08B with:
Asphalt rubber binder must be from 375 to 425 degrees F when mixed with aggregate.

Add to the beginning of section 39-1.08C:
Asphalt rubber binder blending plants must have current qualification under the Department's Material Plant Quality Program.

39.A-7 TRANSPORTING, SPREADING, AND COMPACTING

Refer to Section 39-1.11, "Transporting, Spreading, and Compacting" of the Standard Specifications.

Replace section 39-1.11 with:

39-1.11 CONSTRUCTION

39-1.11A General

Do not place HMA on wet pavement or a frozen surface.

You may deposit HMA in a windrow and load it in the paver if:

1. Paver is equipped with a hopper that automatically feeds the screed
2. Loading equipment can pick up the windrowed material and deposit it in the paver hopper without damaging base material
3. Activities for deposit, pickup, loading, and paving are continuous
4. HMA temperature in the windrow does not fall below 260 degrees F

You may place HMA in 1 or more layers on areas less than 5 feet wide and outside the traveled way, including shoulders. You may use mechanical equipment other than a paver for these areas. The equipment must produce uniform smoothness and texture.

HMA handled, spread, or windrowed must not stain the finished surface of any improvement, including pavement.

Do not use petroleum products such as kerosene or diesel fuel to release HMA from trucks, spreaders, or compactors.

HMA must be free of:

1. Segregation
2. Coarse or fine aggregate pockets
3. Hardened lumps

39-1.11B Longitudinal Joints

39-1.11B(1) General

Longitudinal joints in the top layer must match specified lane edges. Alternate the longitudinal joint offsets in the lower layers at least 0.5 foot from each side of the specified lane edges. You may request other longitudinal joint placement patterns.

A vertical longitudinal joint of more than 0.15 ft is not allowed at any time between adjacent lanes open to traffic.

For HMA thickness of 0.15 ft or less, the distance between the ends of the adjacent surfaced lanes at the end of each day's work must not be greater than can be completed in the following day of normal paving.

For HMA thickness greater than 0.15 ft, you must place HMA on adjacent traveled way lanes so that at the end of each work shift the distance between the ends of HMA layers on adjacent lanes is from 5 to 10 feet. Place additional HMA along the transverse edge at each lane's end and along the exposed longitudinal edges between adjacent lanes. Hand rake and compact the additional HMA to form temporary conforms. You may place Kraft paper or another authorized bond breaker under the conform tapers to facilitate the taper removal when paving operations resume.

39-1.11B(2) Tapered Notched Wedge

For divided highways with an HMA lift thickness greater than 0.15 foot, you may construct a 1-foot wide tapered notched wedge joint as a longitudinal joint between adjacent lanes open to traffic. A vertical notch of 0.75 inch maximum must be placed at the top and bottom of the tapered wedge.

The tapered notched wedge must retain its shape while exposed to traffic. Pave the adjacent lane within 1 day.

Construct the tapered portion of the tapered notched wedge with an authorized strike-off device. The strike-off device must provide a uniform slope and must not restrict the main screed of the paver.

You may use a device attached to the screed to construct longitudinal joints that will form a tapered notched wedge in a single pass. The tapered notched wedge must be compacted to a minimum of 91 percent compaction.

Perform QC testing on the completed tapered notch wedge joint as follows:

1. Perform field compaction tests at the rate of 1 test for each 750-foot section along the joint. Select random locations for testing within each 750-foot section.

2. Perform field compaction tests at the centerline of the joint, 6 inches from the upper vertical notch, after the adjacent lane is placed and before opening the pavement to traffic.

3. Determine maximum density test results.

4. Determine percent compaction of the longitudinal joint as the ratio of the average of the field compaction values and the maximum density test results.

For HMA under QC/QA construction process, the additional quality control compaction results associated with the tapered notch wedge will not be included in the computation of any quality factor and process control.

For acceptance of the completed tapered notch wedge joint, take two 4- or 6-inch diameter cores 6 inches from the upper vertical notch of the completed longitudinal joint for every 3,000 feet at locations designated by the Engineer. Take cores after the adjacent lane is placed and before opening the pavement to traffic. Cores must be taken in the presence of the Engineer and must be marked to identify the test sites. Submit the cores. One core will be used for determination of the field density and 1 core will be used for dispute resolution. The Engineer determines:

1. Field compaction by measuring the bulk specific gravity of the cores under California Test 308, Method A

2. Percent compaction as the ratio of the average of the bulk specific gravity of the core for each day's production to the maximum density test value

For HMA under QC/QA construction process, the additional quality assurance testing by the Engineer to determine field compaction associated with the tapered notch wedge will not be included in the Engineer's verification testing and in the computation of any quality factor and process control.

Determine percent compaction values each day the joint is completed and submit values within 24 hours of testing. If the percent compaction of 1 day's production is less than 91 percent, that day’s notched wedge joint is rejected. Discontinue placement of the tapered notched wedge and notify the Engineer of changes you will make to your construction process in order to meet the specifications.

For HMA under QC/QA construction process, quantities of HMA placed in the completed longitudinal joint will have a quality factor QFQC5 of 1.0.

39-1.11C Widening Existing Pavement

If widening existing pavement, construct new pavement structure to match the elevation of the existing pavement's edge before placing HMA over the existing pavement.

39-1.11D Shoulders, Medians, and Other Road Connections

Until the adjoining through lane's top layer has been paved, do not pave the top layer of:

1. Shoulders
2. Tapers
3. Transitions
4. Road connections
5. Driveways
6. Curve widenings
7. Chain control lanes
8. Turnouts
9. Turn pockets

If the number of lanes changes, pave each through lane's top layer before paving a tapering lane's top layer. Simultaneous to paving a through lane's top layer, you may pave an adjoining area's top layer, including shoulders. Do not operate spreading equipment on any area's top layer until completing final compaction.

39-1.11E Leveling

If leveling with HMA is specified, fill and level irregularities and ruts with HMA before spreading HMA over the base, existing surfaces, or bridge decks. You may use mechanical equipment other than a paver for these areas. The equipment must produce uniform smoothness and texture. HMA used to change an existing surface's cross slope or profile is not paid for as HMA (leveling).

If placing HMA against the edge of existing pavement, sawcut or grind the pavement straight and vertical along the joint and remove extraneous material.

39-1.11F Compaction

Rolling must leave the completed surface compacted and smooth without tearing, cracking, or shoving. Complete finish rolling activities before the pavement surface temperature is:

1. Below 150 degrees F for HMA with unmodified binder
2. Below 140 degrees F for HMA with modified binder
3. Below 200 degrees F for RHMA-G

If a vibratory roller is used as a finish roller, turn the vibrator off.

Do not use a pneumatic-tired roller to compact RHMA-G.

For Standard and QC/QA construction processes, if 3/4-inch aggregate grading is specified, you may use a 1/2-inch aggregate grading if the specified total paved thickness is at least 0.15 foot and less than 0.20 foot thick.

Spread and compact HMA under sections 39-3.03 and 39-3.04 if any of the following applies:

1. Specified paved thickness is less than 0.15 foot.
2. Specified paved thickness is less than 0.20 foot and 3/4-inch aggregate grading is specified and used.
3. You spread and compact at:
   3.1. Asphalt concrete surfacing replacement areas
   3.2. Leveling courses
   3.3. Areas for which the Engineer determines conventional compaction and compaction measurement methods are impeded

Do not open new HMA pavement to public traffic until its mid-depth temperature is below 160 degrees F.

If you request and if authorized, you may cool HMA Type A and Type B with water when rolling activities are complete. Apply water under section 17-3.

Spread sand at a rate from 1 to 2 lb/sq yd on new RHMA-G, RHMA-O, and RHMA-O-HB pavement when finish rolling is complete. Sand must be free of clay or organic matter. Sand must comply with section 90-1.02C(4)(c). Keep traffic off the pavement until spreading sand is complete.

Place shoulder conform tapers concurrently with the adjacent lane's paving.

Place additional HMA along the pavement's edge to conform to road connections and driveways. Hand rake, if necessary, and compact the additional HMA to form a smooth conform taper.

Place HMA on adjacent traveled way lanes so that at the end of each work shift the distance between the ends of HMA layers on adjacent lanes is from 5 to 10 feet. Place additional HMA along the transverse edge at each lane's end and along the exposed longitudinal edges between adjacent lanes. Hand rake and compact the additional HMA to form temporary conforms. You may place Kraft paper or another authorized bond breaker under the conform tapers to facilitate the taper removal when paving operations resume.

Add following to section 39-1.11

If you perform half-width paving, at the end of each day's work the distance between the ends of the adjacent surfaced lanes must not be greater than can be completed in the following day of normal paving.

Do not leave a vertical joint more than 0.15 foot high between adjacent lanes open to traffic or within lanes open to traffic.

39.A-8 SMOOTHNESS

Refer to Section 39-1.12, "Smoothness" of the Standard Specifications.

Replace the 5th and 6th paragraphs of section 39-1.12C with:

On tangents and horizontal curves with a centerline radius of curvature 2,000 feet or more, the PI0 must be at most 2.5 inches per 0.1-mile section.

On horizontal curves with a centerline radius of curvature between 1,000 feet and 2,000 feet including pavement within the superelevation transitions, the PI0 must be at most 5 inches per 0.1-mile section.

Conduct Profilograph measurements in the presence of the Engineer. Failure to have the Engineer present during the Profilograph may constitute re-profiling the roadway. Contractor shall mark or identify the location of must-grinds in the presence of the Engineer.

Profilograph stationing shall follow project stationing. Submitted profilograph data not following project stationing must be re-profilographed.

39.A-9 MISCELLANEOUS AREAS AND DIKES

Refer to Section 39-1.14, "Miscellaneous Areas and Dikes" of the Standard Specifications.

Add to section 39-1.14:

Prepare the area to receive HMA for miscellaneous areas and dikes, including any excavation and backfill as needed.

Replace "6.8" in item 3 in the list in the 4th paragraph of section 39-1.14 with:

6.4

Replace "6.0" in item 3 in the list in the 4th paragraph of section 39-1.14 with:

5.7

Replace "6.8" in the 1st paragraph of section 39-1.15B with:

6.4

Replace "6.0" in the 1st paragraph of section 39-1.15B with:

5.7

39.B METHOD CONSTRUCTION PROCESS

39.B-1 ACCEPTANCE CRITERIA

Refer to Section 39-3.02, "Acceptance Criteria" of the Standard Specifications.

Replace the 1st paragraph of section 39-3.02A with:

The Department samples for acceptance testing and tests for the quality characteristics shown in the following table:

HMA Acceptance—Method Construction Process

Quality characteristic	Test method	HMA type			
		A	B	RHMA-G	OGFC
Aggregate gradation [a]	California Test 202	JMF ± tolerance [b]	JMF ± tolerance [b]	JMF ± tolerance [b]	JMF ± tolerance [b]
Sand equivalent (min) [c]	California Test 217	47	42	47	--
Asphalt binder content (%)	California Test 379 or 382	JMF±0.40	JMF±0.40	JMF ± 0.40	JMF ± 0.40
HMA moisture content (%, max)	California Test 226 or 370	1.0	1.0	1.0	1.0
Stabilometer value (min) [c]	California Test 366				
No. 4 and 3/8" gradings		30	30	--	--
1/2" and 3/4" gradings		37	35	23	--
Percent of crushed particles	California Test 205				
Coarse aggregate (% min)					
One fractured face		90	25	--	90
Two fractured faces		75	--	90	75
Fine aggregate (% min) (Passing no. 4 sieve and retained on no. 8 sieve.)					
One fractured face		70	20	70	90
Los Angeles Rattler (% max)	California Test 211				
Loss at 100 rev.		12	--	12	12
Loss at 500 rev.		45	50	40	40
Air void content (%) [c, d]	California Test 367	4 ± 2	4 ± 2	TV ± 2	--
Fine aggregate angularity (% min)[e]	California Test 234	45	45	45	--
Flat and elongated particles (% max by weight @ 5:1)	California Test 235	Report only	Report only	Report only	Report only
Voids filled with asphalt (%) [f]	California Test 367				
No. 4 grading		65.0–75.0	65.0–75.0	Report only	--
3/8" grading		65.0–75.0	65.0–75.0		
1/2" grading		65.0–75.0	65.0–75.0		
3/4" grading		65.0–75.0	65.0–75.0		
Voids in mineral aggregate (% min) [f]	California Test 367				
No. 4 grading		17.0	17.0	--	--
3/8" grading		15.0	15.0	--	
1/2" grading		14.0	14.0	18.0–23.0	
3/4" grading		13.0	13.0	18.0–23.0	
Dust proportion [f]	California Test 367				
No. 4 and 3/8" gradings		0.6–1.2	0.6–1.2	Report only	--
1/2" and 3/4" gradings		0.6–1.2	0.6–1.2		
Hamburg wheel track (minimum number of passes at 0.5 inch average rut depth)[g]	AASHTO T 324 (Modified)				
PG-58		10,000	10,000	--	--
PG-64		15,000	15,000		
PG-70		20,000	20,000		
PG-76 or higher		25,000	25,000		

Hamburg wheel track (inflection point minimum number of passes)[g] PG-58 PG-64 PG-70 PG-76 or higher	AASHTO T 324 (Modified)	 10,000 10,000 12,500 15000	 10,000 10,000 12,500 15000	--	--
Moisture susceptibility (minimum dry strength, psi)[g]	California Test 371	120	120	--	--
Moisture susceptibility (tensile strength ration, %)[g]	California Test 371	70	70	--	--
Smoothness	Section 39-1.12	12-foot straight-edge and must-grind	12-foot straight-edge and must-grind	12-foot straight-edge and must-grind	12-foot straight-edge and must-grind
Asphalt binder	Various	Section 92	Section 92	Section 92	Section 92
Asphalt rubber binder	Various	--	--	Section 92-1.01D(2) and section 39-1.02D	Section 92-1.01D(2) and section 39-1.02D
Asphalt modifier	Various	--	--	Section 39-1.02D	Section 39-1.02D
CRM	Various	--	--	Section 39-1.02D	Section 39-1.02D

[a] The Engineer determines combined aggregate gradations containing RAP under California Test 367.
[b] The tolerances must comply with the allowable tolerances in section 39-1.02E.
[c] The Engineer reports the average of 3 tests from a single split sample.
[d] The Engineer determines the bulk specific gravity of each lab-compacted briquette under California Test 308, Method A, and theoretical maximum specific gravity under California Test 309.
[e] The Engineer waives this specification if HMA contains 10 percent or less of nonmanufactured sand by weight of total aggregate. Manufactured sand is fine aggregate produced by crushing rock or gravel.
[f] Report only.
[g] Applies to RAP substitution rate greater than 15 percent.

Replace "280 degrees F" in item 2 in the list in the 6th paragraph of section 39-3.04 with:
285 degrees F

END OF SECTION

SECTION 51 CONCRETE STRUCTURES

Refer to Section 51, "Concrete Structures" of the Standard Specifications and the provisions within this section.

All work shall be schedule and executed in compliance with Section 12.C-1 "Closure Requirements" of these Special Provisions.

51.A CONCRETE BRIDGE DECKS

Refer to Section 51-1.03D(2), "Concrete Bridge Decks" of the Standard Specifications.

51.B DRILL AND BOND DOWEL

Refer to Section 51-1.03E(3), "Drill and Bond Dowels" of the Standard Specifications.

51.C JOINTS

Refer to Section 51-2 "Joints" of the Standard Specifications and the provisions within this section.

51.C-1 CLEAN EXPANSION JOINTS

51.C-1.a GENERAL

All deck joints shall be cleaned as specified herein. Cleaning shall include removal of all existing seal material, dirt, debris, damaged waterstop, and joint filler, and shall be accomplished by methods that do not damage existing sound concrete surfaces. Joint size shall be verified after the joint has been cleaned.

The Contractor shall take necessary precautions to ensure that material removed from expansion joints does not fall onto public traffic, private property, or into the waterway beneath the bridges.

The Contractor shall submit for the Engineer's approval, details for preventing material, equipment, or debris from falling onto traffic or railroad property. Joints with undamaged waterstops shall be cleaned only to the top of the waterstop, provided the waterstop does not have to be removed for placement of the seal.

Joints without waterstops and joints with waterstops with existing damage or damage caused by the Contractor, shall be cleaned down to the hinge seat or bearing seat, unless otherwise directed by the Engineer.

All joint damage shall be repaired as directed by the Engineer. Cleaning joints below existing damaged waterstops and repairing existing joint damage will be paid for as extra work as provided in Section 4-1.05, "Changes and Extra Work," of the Standard Specifications. The cost of repairing damage caused by the Contractor's operations shall be borne by the Contractor.

Materials removed from the expansion joint, except for surface dust, shall be recovered and disposed of away from the site in conformance with the provisions in Section 14-10, "Solid Waste Disposal and Recycling," of the Standard Specifications

51.C-1.b PAYMENT

Clean Expansion Joints shall be included in to contract price paid for each type of joint to be replaced.

51.C-2 JOINT SEAL TYPE A (MR 1”)

Refer to Section 51-2.02B, “Type A and AL Joint Seals” of the Standard Specifications for joints shown on the plans as Type A.

51.C-3 JOINT SEAL TYPE B (MR 2”)

Refer to Section 51-2.02C, “Type B Joint Seals” of the Standard Specifications.

51.C-4 JOINT SEAL ASSEMBLIES WITH A MOVEMENT RATING OF 4 INCHES OR LESS

Replace the 7th paragraph of section 51-2.02D(2)(b) with:

Size the recess such that the primary reinforcement for structural members is outside the recess. The maximum depth at abutments and hinges is 10 inches or as directed. The maximum width on each side of the expansion joint is 12 inches or as directed.

51.D ELASTOMERIC BEARING PADS

Refer to Section 51-3, “Bearings” of the Standard Specifications.

51.E APPROACH SLABS

Refer to Section 51-5, “Approach Slabs” of the Standard Specifications and these Special Provisions.

Approach Slabs shall be Type R per Section 15-5.03D “Type R Approach Slabs” of the Standard Specifications.

51.E-1 PAYMENT

The lump sum price paid for Structural Concrete, Approach Slab (Type R) shall include full compensation for furnishing all labor, materials (including but not limited to structural excavation/backfill, aggregate base, and reinforcement), tools, equipment, and incidentals for doing all the work involved in constructing Structural Concrete, Approach Slab (Type R) as shown, as specified, and as directed by the Engineer, and no addition compensation shall be made thereof.

END OF SECTION

SECTION 52 REINFORCEMENT

Refer to Section 52, "Reinforcement" of the Standard Specifications.

52.A-1 PAYMENT

The contract price for Reinforcement includes payment for reinforcement used in the replacement of joint seal assemblies.

Payment for reinforcement used in Structural Concrete Approach Slab (Type R) shall be included in the contract price for Structural Concrete Approach Slab (Type R).

END OF SECTION

SECTION 59 PAINTING

Refer to Section 59, "Painting" of the Standard Specifications.

END OF SECTION

SECTION 84 TRAFFIC STRIPES AND PAVEMENT MARKINGS

Refer to Section 84, "Traffic Stripes and Pavement Markings" of the Standard Specifications and the provisions within this section.

Thermoplastic material shall be free of lead and chromium, and shall conform to the requirements in State Specification PTH 02ALKYD.

Retroreflectivity of the thermoplastic traffic stripes and pavement markings shall conform to the requirements in ASTM Designation: D 6359 99. White thermoplastic traffic stripes and pavement markings shall have a minimum initial retroreflectivity of 250 mcd m 2 lx 1. Yellow thermoplastic traffic stripes and pavement markings shall have a minimum initial retroreflectivity of 150 mcd m 2 lx 1.Where striping joins existing striping, as shown on the plans, the Contractor shall begin and end the transition from the existing striping pattern into or from the new striping pattern a sufficient distance to ensure continuity of the striping pattern.

Thermoplastic traffic stripes shall be Extruded Thermoplastic and shall be applied at the minimum thickness and application rate as specified below. The minimum application rate is based on a solid stripe of 4 inches in width.

Table 3: Thermoplastic Thickness and Application Rate

MINIMUM STRIPE THICKNESS (INCH)	MINIMUM MARKING THICKNESS (INCH)
0.100	0.120

Where striping joins existing striping, as shown on the plans, the Contractor shall begin and end the transition from the existing striping pattern into or from the new striping pattern a sufficient distance to ensure continuity of the striping pattern

84.A PAYMENT

Refer to Section 84-2.04, "Payment" of the Standard Specifications.

Replace the 1st paragraph in Section 84-2.04 with:

A double extruded thermoplastic traffic stripe consisting of two 4-inch wide yellow stripes is measured as two (2) traffic stripes.
A double sprayable thermoplastic traffic stripe consisting of two 4-inch wide yellow stripes is measured as 1 traffic stripe.

END OF SECTION

SECTION 85 PAVEMENT MARKERS

Refer to Section 85, "Pavement Markers" of the Standard Specifications.

END OF SECTION

END OF SPECIAL PROVISIONS

Page Intentionally
Left Blank

(Because some colored inks will not reproduce in copy machines, please use **black ink** to complete this Bid.)

(DO NOT DETACH)

BID TO THE COUNTY OF TEHAMA

DEPARTMENT OF PUBLIC WORKS

COUNTY PROJECT NUMBER: 599990A

NAME OF BIDDER _____

BUSINESS P.O. BOX _____

CITY, STATE, ZIP _____

BUSINESS STREET ADDRESS _____
(Please include even if P.O. Box used)

CITY, STATE, ZIP _____

TELEPHONE NO: _____ **AREA CODE ( )** _____

FAX NO: _____ **AREA CODE ( )** _____

CONTRACTOR LICENSE NO. _____

The work for which this Bid is submitted is for construction in accordance with the Special Provisions (including the payment of not less not less than the higher of (1) the State general prevailing wage rates, or (2) the rates specified by the Federal Secretary of Labor), the project plans described below, including any addenda thereto, the contract annexed hereto, and also in accordance with the Standard Specifications dated 2010 and the Standard Plans for Construction dated 2010 of the California Department of Transportation, and the Labor Surcharge And Equipment Rental Rates in effect on the date the work is accomplished.

The Special Provisions for the work to be done are dated 8/12/2016 and are entitled:

COUNTY OF TEHAMA, DEPARTMENT OF PUBLIC WORKS
NOTICE TO BIDDERS, SPECIAL PROVISIONS, PROPOSAL, AND CONTRACT

FOR CONSTRUCTION ON:

BRIDGE PREVENTATIVE MAINTENANCE PROJECT

LOCATIONS THROUGHOUT TEHAMA COUNTY, CALIFORNIA

FEDERAL-AID PROJECT NUMBER: BRLS 5908(081)
COUNTY PROJECT NUMBER: 599990A

The project plans for the work to be done were approved **9/20/2016** and are entitled:

COUNTY OF TEHAMA, DEPARTMENT OF PUBLIC WORKS
CONSTRUCTION PLANS FOR

BRIDGE PREVENTATIVE MAINTENANCE PROJECT

FEDERAL-AID PROJECT NUMBER: BRLS 5908(081)
COUNTY PROJECT NUMBER: 599990A

The contract, if awarded, will be awarded to the responsive and responsible bidder who submitted the lowest BASE BID

Each bid shall be accompanied by a certified or cashier's check or bid bond in the amount of ten percent (10%) of the total BASE BID price, payable to the County of Tehama.

The bidder shall set forth for each unit basis item of work a unit price and a total for the item, and for each lump sum item a total for the item, all in clearly legible figures in the respective spaces provided for that purpose. In the case of unit basis items, the amount set forth under the "Item Total" column shall be the product of the unit price bid and the estimated quantity for the item.

In case of discrepancy between the unit price and the total set forth for a unit basis item, the unit price shall prevail, except as provided in (a) or (b), as follows:
(a) If the amount set forth as a unit price is unreadable or otherwise unclear, or is omitted, or is the same as the amount as the entry in the item total column, then the amount set forth in the item total column for the item shall prevail and shall be divided by the estimated quantity for the item and the price thus obtained shall be the unit price;
(b) (Decimal Errors) If the product of the entered unit price and the estimated quantity is exactly off by a factor of ten, one hundred, etc., or one-tenth, or one-hundredth, etc. from the entered total, the discrepancy will be resolved by using the entered unit price or item total, whichever most closely approximates percentage wise the unit price or item total in the County of Tehama's Final Estimate of cost.

If both the unit price and the item total are unreadable or otherwise unclear, or are omitted, the bid may be deemed irregular. Likewise if the item total for a lump sum item is unreadable or otherwise unclear, or is omitted, the bid may be deemed irregular unless the project being bid has only a single item and a clear, readable total bid is provided.

Symbols such as commas and dollar signs will be ignored and have no mathematical significance in establishing any unit price or item total or lump sums. Written unit prices, item totals and lump sums will be interpreted according to the number of digits and, if applicable, decimal placement. Cents symbols also have no significance in establishing any unit price or item total since all figures are assumed to be expressed in dollars and/or decimal fractions of a dollar. Bids on lump sum items shall be item totals only; if any unit price for a lump sum item is included in a bid and it differs from the item total, the items total shall prevail.

The foregoing provisions for the resolution of specific irregularities cannot be so comprehensive as to cover every omission, inconsistency, error or other irregularity which may occur in a bid. Any situation not specifically provided for will be determined in the discretion of the County of Tehama, and that discretion will be exercised in the manner deemed by the County of Tehama to best protect the public interest in the prompt and economical completion of the work. The decision of the County of Tehama respecting the amount of a bid, or the existence or treatment of an irregularity in a bid, shall be final.

If this Bid shall be accepted and the undersigned shall fail to enter into the contract and furnish the 2 bonds in the sums required by the section entitled "Contract Bonds", in Section 3 of the Special Provisions, with surety satisfactory to the County of Tehama, within 10 days, not including Saturdays, Sundays and legal holidays, after the bidder has received notice from the County of Tehama that the contract has been awarded, the County of Tehama may, at its option, determine that the bidder has abandoned the contract, and thereupon this Bid and the acceptance thereof shall be null and void and the forfeiture of the security accompanying this Bid shall operate and the same shall be the property of the County of Tehama.

The undersigned, as bidder, declares that the only persons or parties interested in this Bid as principals are those named herein; that this Bid is made without collusion with any other person, firm, or corporation; that he has carefully examined the location of the proposed work, the annexed proposed form of contract, and the plans therein referred to; and he proposes, and agrees if this Bid is accepted, that he will contract with the County of Tehama, in the form of the copy of the contract annexed hereto, to provide all necessary machinery, tools, apparatus and other means of construction, and to do all the work and furnish all the materials specified in the contract, in the manner and time therein prescribed, and according to the requirements of the Engineer as therein set forth, and that he will take in full payment therefor the following prices, to wit:

Bid Item List

Item No.		Item Description	Unit Meas.	Quantity	Unit Price	Amount
1		Mobilization	LS	LUMP SUM		
2		Traffic Control System	LS	LUMP SUM		
3		Construction Area Signs	LS	LUMP SUM		
4		Portable Changeable Message Sign	LS	LUMP SUM		
5		Prepare Water Pollution Control Program	LS	LUMP SUM		
6		Job Site Management	LS	LUMP SUM		
7		Temporary Concrete Washout	LS	LUMP SUM		
8		Cold Plane Asphalt Concrete Pavement	SQYD	670		
9		Concrete Removal	CY	12		
10		Bridge Removal (Portion)	EA	4		
11		Prepare Concrete Bridge Deck Surface	SQFT	125,236		
12		Remove Asphalt Concrete Surfacing	SQFT	4,850		
13		Furnish Bridge Deck Treatment Material (Methacrylate)	GAL	1,392		
14		Treat Bridge Deck (Methacrylate)	SQFT	125,236		
15		Public Safety Plan	LS	LUMP SUM		
16		Furnish Polyester Concrete Overlay	CF	1,476		
17		Place Polyester Concrete Overlay	SQFT	23,623		

18		Slurry Seal	TON	1		
19		Hot Mix Asphalt- Type B 1/2" Method	TON	55		
20		Structural Concrete-Bridge	CY	17		
21		Drill and Bond Dowel	LF	46		
22		Joint Seal Type A (MR 1")	LF	180		
23		Joint Seal Type B (MR 2")	LF	65		
24	(P)	Joint Seal Assembly (MR 4")	LF	132		
25		Replace Bearing Pad	EA	2		
26		Structural Concrete, Approach Slab (TYPE R)	LS	LUMP SUM		
27	(P)	Bar Reinforcing Steel (Bridge)	LB	800		
28		Clean and Paint Structural Steel (Existing Bridge)	LS	1		
29		Thermoplastic Traffic Stripe	LF	9,022		
30		Pavement Marker	EA	753		
			BID TOTAL =			

LIST OF SUBCONTRACTORS

The Bidder shall list the name, address and license number of each subcontractor to whom the Bidder proposes to subcontract portions of the work, as required by the provisions in Section 2.C "Bid Document Completion" of these Special Provisions and Section 2-1.33C, "Subcontractor List" of the Standard Specifications. The Bidder shall refer to Section 2.C-3 entitled "Required Items for Bid" of these Special Provisions. Failure to provide complete information in columns 1 through 4 within the specified time will result in a nonresponsive bid.

Column 1: **SUBCONTRACTOR** (Name, Address, DIR Registration No., and License No.)	Column 2: **BID ITEM NUMBERS**	Column 3: **PERCENT (%) OF BID ITEMS** (Describe portion of items subcontracted)	Column 4: **$ VALUE OF WORK**

LOCAL AGENCY BIDDER DBE COMMITMENT (CONSTRUCTION CONTRACTS) EXHIBIT 15-G

1. Local Agency: Tehama County Pulbic Works
2. Contract DBE Goal: **8%**
3. Project Description: Bridge Preventative Maintenance Project
4. Project Location: Locations Throughout Tehama County, California
5. Bidder's Name:
6. Prime Certified DBE: ☐
7. Bid Amount:
8. Total Dollar Amount for **ALL** Subcontractors:
9. Total Number of **ALL** Subcontractors:

10. Bid Item Number	11. Description of Work, Service, or Materials Supplied	12. DBE Certification Number	13. DBE Contact Information (Must be certified on the date bids are opened)	14. DBE Dollar Amount

Local Agency to Complete this Section

21. Local Agency Contract Number: 599990A
22. Federal-Aid Project Number: BRLS 5908(081)
23. Bid Opening Date: October 12, 2016
24. Contract Award Date:

Local Agency certifies that all DBE certifications are valid and information on this form is complete and accurate.

25. Local Agency Representative's Signature
26. Date
27. Local Agency Representative's Name
28. Phone
29. Local Agency Representative's Title

15. TOTAL CLAIMED DBE PARTICIPATION

$

%

IMPORTANT: Identify all DBE firms being claimed for credit, regardless of tier. Names of the First Tier DBE Subcontractors and their respective item(s) of work listed above must be consistent, where applicable with the names and items of the work in the "Subcontractor List" submitted with your bid. Written confirmation of each listed DBE is required.

16. Preparer's Signature
17. Date
18. Preparer's Name
19. Phone
20. Preparer's Title

DISTRIBUTION: 1. Original – Local Agency

2. Copy – Caltrans District Local Assistance Engineer (DLAE). Failure to submit to DLAE within 30 days of contract execution may result in de-obligation of federal funds on contract. Include additional copy with award package.

ADA Notice: For individuals with sensory disabilities, this document is available in alternate formats. For information call (916) 654-6410 or TDD (916) 654-3880 or write Records and Forms Management, 1120 N Street, MS-89, Sacramento, CA 95814.

INSTRUCTIONS – CONSTRUCTION CONTRACT DBE COMMITMENT

CONTRACTOR SECTION

1. Local Agency - Enter the name of the local or regional agency that is funding the contract.
2. Contract DBE Goal - Enter the contract DBE goal percentage as it appears on the project advertisement.
3. Project Location - Enter the project location as it appears on the project advertisement.
4. Project Description - Enter the project description as it appears on the project advertisement (Bridge Rehab, Seismic Rehab, Overlay, Widening, etc).
5. Bidder's Name - Enter the contractor's firm name.
6. Prime Certified DBE - Check box if prime contractor is a certified DBE.
7. Bid Amount - Enter the total contract bid dollar amount for the prime contractor.
8. Total Dollar Amount for ALL Subcontractors – Enter the total dollar amount for all subcontracted contractors. SUM = (DBEs + all Non-DBEs). Do not include the prime contractor information in this count.
9. Total number of ALL subcontractors – Enter the total number of all subcontracted contractors. SUM = (DBEs + all Non-DBEs). Do not include the prime contractor information in this count.
10. Bid Item Number - Enter bid item number for work, services, or materials supplied to be provided.
11. Description of Work, Services, or Materials Supplied - Enter description of work, services, or materials to be provided. Indicate all work to be performed by DBEs including work performed by the prime contractor's own forces, if the prime is a DBE. If 100% of the item is not to be performed or furnished by the DBE, describe the exact portion to be performed or furnished by the DBE. See LAPM Chapter 9 to determine how to count the participation of DBE firms.
12. DBE Certification Number - Enter the DBE's Certification Identification Number. All DBEs must be certified on the date bids are opened.
13. DBE Contact Information - Enter the name, address, and phone number of all DBE subcontracted contractors. Also, enter the prime contractor's name and phone number, if the prime is a DBE.
14. DBE Dollar Amount - Enter the subcontracted dollar amount of the work to be performed or service to be provided. Include the prime contractor if the prime is a DBE. See LAPM Chapter 9 for how to count full/partial participation.
15. Total Claimed DBE Participation - $: Enter the total dollar amounts entered in the "DBE Dollar Amount" column. %: Enter the total DBE participation claimed ("Total Claimed DBE Participation Dollars" divided by item "Bid Amount"). If the total % claimed is less than item "Contract DBE Goal," an adequately documented Good Faith Effort (GFE) is required (see Exhibit 15-H DBE Information - Good Faith Efforts of the LAPM).
16. Preparer's Signature - The person completing the DBE commitment form on behalf of the contractor's firm must sign their name.
17. Date - Enter the date the DBE commitment form is signed by the contractor's preparer.
18. Preparer's Name - Enter the name of the person preparing and signing the contractor's DBE commitment form.
19. Phone - Enter the area code and phone number of the person signing the contractor's DBE commitment form.
20. Preparer's Title - Enter the position/title of the person signing the contractor's DBE commitment form.

LOCAL AGENCY SECTION

21. Local Agency Contract Number - Enter the Local Agency contract number or identifier.
22. Federal-Aid Project Number - Enter the Federal-Aid Project Number.
23. Bid Opening Date - Enter the date contract bids were opened.
24. Contract Award Date - Enter the date the contract was executed.
25. Local Agency Representative's Signature - The person completing this section of the form for the Local Agency must sign their name to certify that the information in this and the Contractor Section of this form is complete and accurate.
26. Date - Enter the date the DBE commitment form is signed by the Local Agency Representative.
27. Local Agency Representative's Name - Enter the name of the Local Agency Representative certifying the contractor's DBE commitment form.
28. Phone - Enter the area code and phone number of the person signing the contractor's DBE commitment form.
29. Local Agency Representative Title - Enter the position/title of the Local Agency Representative certifying the contractor's DBE commitment form.

EXHIBIT 15-H DBE INFORMATION- GOOD FAITH EFFORTS

DBE INFORMATION—GOOD FAITH EFFORTS

Federal-aid Project No. BRLS 5908(081) Bid Opening Date: October 12, 2016

BRIDGE PREVENTATIVE MAINTENANCE PROJECT

The **County of Tehama** established an Under-utilized Disadvantaged Business Enterprise (DBE) goal of **8%** for this project. The information provided herein shows that a good faith effort was made.

Lowest, second lowest and third lowest bidders shall submit the following information to document adequate good faith efforts. Bidders ***should*** submit the following information even if the "Local Agency Bidder – DBE Commitment" form indicates that the bidder has met the DBE goal. This will protect the bidder's eligibility for award of the contract if the administering agency determines that the bidder failed to meet the goal for various reasons, e.g., a DBE firm was not certified at bid opening, or the bidder made a mathematical error.

Submittal of only the "Local Agency Bidder – DBE Commitment" form may not provide sufficient documentation to demonstrate that adequate good faith efforts were made.

The following items are listed in the Section entitled "Submission of DBE Commitment" of the Special Provisions:

A. The names and dates of each publication in which a request for DBE participation for this project was placed by the bidder (please attach copies of advertisements or proofs of publication):

PUBLICATIONS	DATES OF ADVERTISEMENT

B. The names and dates of written notices sent to certified DBEs soliciting bids for this project and the dates and methods used for following up initial solicitations to determine with certainty whether the DBEs were interested (please attach copies of solicitations, telephone records, fax confirmations, etc.):

NAMES OF DBEs SOLICITED	DATE OF INITIAL SOLICITATION	FOLLOW UP METHODS AND DATES

C. The items of work which the bidder made available to DBE firms, including, where appropriate, any breaking down of the contract work items (including those items normally performed by the bidder

with its own forces) into economically feasible units to facilitate DBE participation. It is the bidder's responsibility to demonstrate that sufficient work to facilitate DBE participation was made available to DBE firms.

ITEMS OF WORK	BIDDER NORMALLY PERFORMS ITEM (Y/N)	BREAKDOWN OF ITEMS	AMOUNT ($)	PERCENTAGE OF CONTRACT

D. The names, addresses and phone numbers of rejected DBE firms, the reasons for the bidder's rejection of the DBEs, the firms selected for that work (please attach copies of quotes from the firms involved), and the price difference for each DBE if the selected firm is not a DBE:

Names, addresses and phone numbers of rejected DBEs and the **reasons for the bidder's rejection** of the DBEs:

Names, addresses and phone numbers of firms selected for the work above:

E. Efforts made to assist interested DBEs in obtaining bonding, lines of credit or insurance, and any technical assistance or information related to the plans, specifications and requirements for the work which was provided to DBEs:

F. Efforts made to assist interested DBEs in obtaining necessary equipment, supplies, materials, or related assistance or services, excluding supplies and equipment the DBE subcontractor purchases or leases from the prime contractor or its affiliate:

G. The names of agencies, organizations or groups contacted to provide assistance in contacting, recruiting and using DBE firms (please attach copies of requests to agencies and any responses received, i.e., lists, Internet page download, etc.):

NAME OF AGENCY/ORGANIZATION	METHOD/DATE OF CONTACT	RESULTS

H. Any additional data to support a demonstration of good faith efforts (use additional sheets if necessary):

NOTE: USE ADDITIONAL SHEETS OF PAPER IF NECESSARY.

BIDDER'S LIST OF SUBCONTRACTORS (DBE AND NON-DBE) (EXHIBIT 12-B LAPM)

The bidder shall list all subcontractors (both DBE and non-DBE) in accordance with Title 49, Section 26.11 of the Code of Federal Regulations. This listing is required in addition to listing DBE Subcontractors elsewhere in the proposal. **Photocopy this form for additional firms.**

Firm Name/ Address/ City, State, ZIP	**Phone/ Fax**	**Annual Gross Receipts**	**Description of Portion of Work to be Performed**	**Local Agency Use Only (Certified DBE?)**
Name	*Phone*	☐ < $1 million		☐YES
		☐ < $5 million		☐NO
Address		☐ < $10 million		*If YES list DBE #:*
	Fax	☐ < $15 million		
City State ZIP		☐ > $15 million		Age of Firm (Yrs.)
Name	*Phone*	☐ < $1 million		☐YES
		☐ < $5 million		☐NO
Address		☐ < $10 million		*If YES list DBE #:*
	Fax	☐ < $15 million		
City State ZIP		☐ > $15 million		Age of Firm (Yrs.)
Name	*Phone*	☐ < $1 million		☐YES
		☐ < $5 million		☐NO
Address		☐ < $10 million		*If YES list DBE #:*
	Fax	☐ < $15 million		
City State ZIP		☐ > $15 million		Age of Firm (Yrs.)
Name	*Phone*	☐ < $1 million		☐YES
		☐ < $5 million		☐NO
Address		☐ < $10 million		*If YES list DBE #:*
	Fax	☐ < $15 million		
City State ZIP		☐ > $15 million		Age of Firm (Yrs.)

Distribution: 1) Original - Local Agency File

EQUAL EMPLOYMENT OPPORTUNITY CERTIFICATION

(THE BIDDER'S EXECUTION ON THE SIGNATURE PORTION OF THIS BID SHALL ALSO CONSTITUTE AN ENDORSEMENT AND EXECUTION OF THOSE CERTIFICATIONS WHICH ARE A PART OF THIS BID)

The bidder____, proposed subcontractor_____, hereby certifies that he has _____ , has not _____, participated in a previous contract or subcontract subject to the equal opportunity clauses, as required by Executive Orders 10925, 11114, or 11246, and that, where required, he has filed with the Joint Reporting Committee, the Director of the Office of Federal Contract Compliance, a Federal Government contracting or administering agency, or the former President's Committee on Equal Employment Opportunity, all reports due under the applicable filling requirements.

Note: The above certification is required by the Equal Employment Opportunity Regulations of the Secretary of Labor (41 CFR 60-1.7(b) (1)), and must be submitted by bidders and proposed subcontractors only in connection with contracts and subcontracts which are subject to the equal opportunity clause. Contracts and subcontracts which are exempt from the equal opportunity clause are set forth in 41 CFR 60-1.5. (Generally only contracts or subcontracts of $10,000 or under are exempt.)

Currently, Standard Form 100 (EEO-1) is the only report required by the Executive Orders or their implementing regulations.

Proposed prime contractors and subcontractors who have participated in a previous contract or subcontract subject to the Executive Orders and have not filed the required reports should note that 41 CFR 60-1.7(b) (1) prevents the award of contracts and subcontracts unless such contractor submits a report covering the delinquent period or such other period specified by the Federal Highway Administration or by the Director, Office of Federal Contract Compliance, U.S. Department of Labor.

FEDERAL MINIMUM WAGE RATES

Federal minimum wage rates are not included in these specifications. They may be obtained at the Internet Website http://www.wdol.gov/dba.aspx#0.

A copy is also available at the Offices of Tehama County Public Works, 9380, San Benito Avenue, Gerber, CA 96035

NON-LOBBYING CERTIFICATION FOR FEDERAL-AID CONTRACTS

Refer to Section 7.G-1 “FHWA- 1273”, Part XI “Certification Regarding Use of Contract Funds for Lobbying”. Note that the prospective participant certifies to this provision **by signing and submitting this bid or proposal**.

The prospective participant also agrees by submitting his or her bid or proposal that he or she shall require that the language of this certification be included in all lower tier subcontracts, which exceed $100,000 and that all such subrecipients shall certify and disclose accordingly.

"FEDERAL STANDARD FORM LLL" is included herewith in the following 2-sheet insert and shall be completed by the bidder **if applicable**.

DISCLOSURE OF LOBBYING ACTIVITIES

DISCLOSURE OF LOBBYING ACTIVITIES

Approved by OMB
0348-0046

Complete this form to disclose lobbying activities pursuant to 31 U.S.C. 1352
(See reverse for public burden disclosure.)

1. Type of Federal Action:
- ☐ a. contract
- b. grant
- c. cooperative agreement
- d. loan
- e. loan guarantee
- f. loan insurance

2. Status of Federal Action:
- ☐ a. bid/offer/application
- b. initial award
- c. post-award

3. Report Type:
- ☐ a. initial filing
- b. material change

For Material Change Only:
year _____ quarter _____
date of last report _____

4. Name and Address of Reporting Entity:
☐ **Prime** ☐ **Subawardee**
Tier _____, *if known*:

Congressional District, *if known*:

5. If Reporting Entity in No. 4 is a Subawardee, Enter Name and Address of Prime:

Congressional District, *if known*:

6. Federal Department/Agency:

7. Federal Program Name/Description:

CFDA Number, *if applicable*: _____

8. Federal Action Number, *if known*:

9. Award Amount, *if known*:
$

10. a. Name and Address of Lobbying Entity
(*if individual, last name, first name, MI*):

b. Individuals Performing Services (*including address if different from No. 10a*)
(*last name, first name, MI*):

(attach Continuation Sheet(s) SF-LLLA, if necessary)

11. Amount of Payment (*check all that apply*):
$ _____ ☐ **actual** ☐ **planned**

12. Form of Payment (*check all that apply*):
- ☐ **a. cash**
- ☐ **b. in-kind; specify:** nature _____
  value _____

13. Type of Payment (*check all that apply*):
- ☐ **a. retainer**
- ☐ **b. one-time fee**
- ☐ **c. commission**
- ☐ **d. contingent fee**
- ☐ **e. deferred**
- ☐ **f. other; specify:** _____

14. Brief Description of Services Performed or to be Performed and Date(s) of Service, including officer(s), employee(s), or Member(s) contacted, for Payment Indicated in Item 11:

(attach Continuation Sheet(s) SF-LLLA, if necessary)

15. Continuation Sheet(s) SF-LLLA attached: ☐ **Yes** ☐ **No**

16. Information requested through this form is authorized by title 31 U.S.C. section 1352. This disclosure of lobbying activities is a material representation of fact upon which reliance was placed by the tier above when this transaction was made or entered into. This disclosure is required pursuant to 31 U.S.C. 1352. This information will be reported to the Congress semi-annually and will be available for public inspection. Any person who fails to file the required disclosure shall be subject to a civil penalty of not less that $10,000 and not more than $100,000 for each such failure.

Signature: _____
Print Name: _____
Title: _____
Telephone No.: _____ Date: _____

Federal Use Only:

Authorized for Local Reproduction
Standard Form LLL (Rev. 7-97)

INSTRUCTIONS FOR COMPLETION OF SF-LLL, DISCLOSURE OF LOBBYING ACTIVITIES

This disclosure form shall be completed by the reporting entity, whether subawardee or prime Federal recipient, at the initiation or receipt of covered Federal action or a material change to previous filing pursuant to title 31 U.S.C. section 1352. The filing of a form is required for such payment or agreement to make payment to lobbying entity for influencing or attempting to influence an officer or employee of any agency, a Member of Congress an officer or employee of Congress or an employee of a Member of Congress in connection with a covered Federal action. Attach a continuation sheet for additional information if the space on the form is inadequate. Complete all items that apply for both the initial filing and material change report. Refer to the implementing guidance published by the Office of Management and Budget for additional information.

1. Identify the type of covered Federal action for which lobbying activity is and/or has been secured to influence, the outcome of a covered Federal action.

2. Identify the status of the covered Federal action.

3. Identify the appropriate classification of this report. If this is a follow-up report caused by a material change to the information previously reported, enter the year and quarter in which the change occurred. Enter the date of the last, previously submitted report by this reporting entity for this covered Federal action.

4. Enter the full name, address, city, state and zip code of the reporting entity. Include Congressional District if known. Check the appropriate classification of the reporting entity that designates if it is or expects to be a prime or subaward recipient. Identify the tier of the subawardee, e.g., the first subawardee of the prime is the first tier. Subawards include but are not limited to subcontracts, subgrants and contract awards under grants.

5. If the organization filing the report in Item 4 checks "Subawardee" then enter the full name, address, city, state and zip code of the prime Federal recipient. Include Congressional District, if known.

6. Enter the name of the Federal agency making the award or loan commitment. Include at least one organization level below agency name, if known. For example, Department of Transportation, United States Coast Guard.

7. Enter the Federal program name or description for the covered Federal action (item 1). If known, enter the full Catalog of Federal Domestic Assistance (CFDA) number for grants, cooperative agreements, loans and loan commitments.

8. Enter the most appropriate Federal identifying number available for the Federal action identification in item 1 (e.g., Request for Proposal (RFP) number, Invitation for Bid (IFB) number, grant announcement number, the contract grant. or loan award number, the application/proposal control number assigned by the Federal agency). Include prefixes, e.g., "RFP-DE-90-001."

9. For a covered Federal action where there has been an award or loan commitment by the Federal agency, enter the Federal amount of the award/loan commitments for the prime entity identified in item 4 or 5.

10. (a) Enter the full name, address, city, state and zip code of the lobbying entity engaged by the reporting entity identified in item 4 to influenced the covered Federal action.

(b) Enter the full names of the individual(s) performing services and include full address if different from 10 (a). Enter Last Name, First Name and Middle Initial (Ml).

11. Enter the amount of compensation paid or reasonably expected to be paid by the reporting entity (item 4) to the lobbying entity (item 10). Indicate whether the payment has been made (actual) or will be made (planned). Check all boxes that apply. If this is a material change report, enter the cumulative amount of payment made or planned to be made.

12. Check the appropriate box(es). Check all boxes that apply. If payment is made through an in-kind contribution, specify the nature and value of the in-kind payment.

13. Check the appropriate box(es). Check all boxes that apply. If other, specify nature.

14. Provide a specific and detailed description of the services that the lobbyist has performed or will be expected to perform and the date(s) of any services rendered. Include all preparatory and related activity not just time spent in actual contact with Federal officials. Identify the Federal officer(s) or employee(s) contacted or the officer(s) employee(s) or Member(s) of Congress that were contacted.

15. Check whether or not a continuation sheet(s) is attached.

16. The certifying official shall sign and date the form, print his/her name title and telephone number.

Public reporting burden for this collection of information is estimated to average 30 minutes per response, including time for reviewing instruction, searching existing data sources, gathering and maintaining the data needed, and completing and reviewing the collection of information. Send comments regarding the burden estimate or any other aspect of this collection of information, including suggestions for reducing this burden, to the Office of Management and Budget, Paperwork Reduction Project (0348-0046), Washington, D.C. 20503.

SF-LLL-Instructions Rev. 06-04-90

PUBLIC CONTRACT CODE

PUBLIC CONTRACT CODE SECTION 10285.1 STATEMENT

In accordance with Public Contract Code Section 10285.1 (Chapter 376, Stats. 1985), the bidder hereby declares under penalty of perjury under the laws of the State of California that the bidder has ___ , has not ___been convicted within the preceding three years of any offenses referred to in that section, including any charge of fraud, bribery, collusion, conspiracy, or any other act in violation of any state or Federal antitrust law in connection with the bidding upon, award of, or performance of, any public works contract, as defined in Public Contract Code Section 1101, with any public entity, as defined in Public Contract Code Section 1100, including the Regents of the University of California or the Trustees of the California State University. The term "bidder" is understood to include any partner, member, officer, director, responsible managing officer, or responsible managing employee thereof, as referred to in Section 10285.1.

Note: The bidder must place a check mark after "has" or "has not" in one of the blank spaces provided. The above Statement is part of the Bid. Signing this Bid on the signature portion thereof shall also constitute signature of this Statement. Bidders are cautioned that making a false certification may subject the certifier to criminal prosecution.

PUBLIC CONTRACT CODE SECTION 10162 QUESTIONNAIRE

In accordance with Public Contract Code Section 10162, the Bidder shall complete, under penalty of perjury, the following questionnaire:

Has the bidder, any officer of the bidder, or any employee of the bidder who has a proprietary interest in the bidder, ever been disqualified, removed, or otherwise prevented from bidding on, or completing a federal, state, or local government project because of a violation of law or a safety regulation?

Yes _____ No _____

If the answer is yes, explain the circumstances in the following space. Provide additional pages as needed.

PUBLIC CONTRACT CODE 10232 STATEMENT

In accordance with Public Contract Code Section 10232, the Contractor, hereby states under penalty of perjury, that no more than one final unappealable finding of contempt of court by a federal court has been issued against the Contractor within the immediately preceding two year period because of the Contractor's failure to comply with an order of a federal court which orders the Contractor to comply with an order of the National Labor Relations Board.

Note: The above Statement and Questionnaire are part of the Bid. Signing this Bid on the signature portion thereof shall also constitute signature of this Statement and Questionnaire.

Bidders are cautioned that making a false certification may subject the certifier to criminal prosecution.

NONCOLLUSION AFFIDAVIT

(TITLE 23 UNITED STATES CODE SECTION 112 AND PUBLIC CONTRACT CODE SECTION 7106)

TO THE COUNTY OF TEHAMA
DEPARTMENT OF PUBLIC WORKS.

In accordance with Title 23 United States Code Section 112 and Public Contract Code 7106 the bidder declares that the bid is not made in the interest of, or on behalf of, any undisclosed person, partnership, company, association, organization, or corporation; that the bid is genuine and not collusive or sham; that the bidder has not directly or indirectly induced or solicited any other bidder to put in a false or sham bid, and has not directly or indirectly colluded, conspired, connived, or agreed with any bidder or anyone else to put in a sham bid, or that anyone shall refrain from bidding; that the bidder has not in any manner, directly or indirectly, sought by agreement, communication, or conference with anyone to fix the bid price of the bidder or any other bidder, or to fix any overhead, profit, or cost element of the bid price, or of that of any other bidder, or to secure any advantage against the public body awarding the contract of anyone interested in the proposed contract; that all statements contained in the bid are true; and, further, that the bidder has not, directly or indirectly, submitted his or her bid price or any breakdown thereof, or the contents thereof, or divulged information or data relative thereto, or paid, and will not pay, any fee to any corporation, partnership, company association, organization, bid depository, or to any member or agent thereof to effectuate a collusive or sham bid.

Note: The above Noncollusion Affidavit is part of the Bid. Signing this Bid on the signature portion thereof shall also constitute signature of this Noncollusion Affidavit.

Bidders are cautioned that making a false certification may subject the certifier to criminal prosecution.

DEBARMENT AND SUSPENSION CERTIFICATION

TITLE 49, CODE OF FEDERAL REGULATIONS, PART 29

The Bidder's attention is directed to Section 7.G-1 "FHWA- 1273", Part X "Certification Regarding Debarment, Suspension, Ineligibility And Voluntary Exclusion".

If there are any exceptions to this certification, insert the exceptions in the following space.

Exceptions will not necessarily result in denial of award, but will be considered in determining bidder responsibility. For any exception noted above, indicate below to whom it applies, initiating agency, and dates of action.

Notes: Providing false information may result in criminal prosecution or administrative sanctions.

The above certification is part of the Bid. Signing this Bid on the signature portion thereof shall also constitute signature of this Certification.

OPT-OUT FORM

OPT OUT OF PAYMENT ADJUSTMENTS FOR PRICE INDEX FLUCTUATIONS

You may opt out of the Payment Adjustments for Price Index Fluctuations portion of the Special Provisions. If you elect to opt out of these provisions, complete this form. *If you do not want to opt-out of these provisions, simply leave this form blank.*

As described in Sections 2-1.33D and 9-1.07A of the Standard Specifications, I opt out of the Payment Adjustments for Price Index Fluctuations as presented in Section 9-1.07 of the Standard Specifications and amended in Section 9.D of the project Bid Book for the:

BRIDGE PREVENTATIVE MAINTENANCE PROJECT
TEHAMA COUNTY PROJECT NUMBER: 599990A

Print and sign your Name, fill out the date and firm name below to opt out of payment adjustment for price index fluctuations.

Name- Print	Name- Signature	Date

Firm/ Company Name

BID SIGNATURE PAGE

Accompanying this Bid is_____in amount equal to at least ten percent (10%) of the total of the bid.

(NOTICE: INSERT THE WORDS "CASH($ _____)," "CASHIER'S CHECK","CERTIFIED CHECK", OR "BIDDER'S BOND," AS THE CASE MAY BE.)

The names of all persons interested in the foregoing Bid as principals are as follows:

IMPORTANT NOTICE

If bidder or other interested person is a corporation, state legal name of corporation, also names of the president, secretary, treasurer, and manager thereof; if a co-partnership, state true name of firm, also names of all individual copartners composing firm; if bidder or other interested person is an individual, state first and last names in full.

_____

_____

_____

_____

Licensed in accordance with an act providing for the registration of Contractors,

License No._____ Classification(s)_____

ADDENDA –

This Bid is submitted with respect to the changes to the contract included in addenda number/s

_____

(Fill in addenda numbers if addenda have been received and insert, in this Bid, any Engineer's Estimate sheets that were received as part of the addenda.)

By my signature on this Bid I certify, under penalty of perjury under the laws of the State of California, that the foregoing questionnaire and statements of Public Contract Code Sections 10162, 10232 and 10285.1 are true and correct and that the bidder has complied with the requirements of Section 8103 of the Fair Employment and Housing Commission Regulations (Chapter 5, Title 2 of the California Administrative Code). By my signature on this Bid I further certify, under penalty of perjury under the laws of the State of California and the United States of America, that the Noncollusion Affidavit required by Title 23 United States Code, Section 112 and Public Contract Code Section 7106; and the Title 49 Code of Federal Regulations, Part 29 Debarment and Suspension Certification are true and correct.

Date:

Sign Here

Signature and Title of Bidder

Business Address:

Place of Business:

Place of Residence:

COUNTY OF TEHAMA
DEPARTMENT OF PUBLIC WORKS

BIDDER'S BOND

We,_____as Principal, and

_____as Surety are bound unto the County of Tehama, State of California, hereafter called "County", in the penal sum of ten percent (10%) of the total amount of the bid of the Principal above named, submitted by said Principal to the County for the work described below, for the payment of which sum in lawful money of the United States, well and truly to be made, we bind ourselves, our heirs, executors, administrators and successors, jointly and severally, by these presents

THE CONDITION OF THIS OBLIGATION IS SUCH, THAT:

WHEREAS the Principal is submitting a bid to the County for certain construction specifically described as follows:

COUNTY OF TEHAMA, DEPARTMENT OF PUBLIC WORKS
NOTICE TO BIDDERS, SPECIAL PROVISIONS, AND CONSTRUCTION PLANS
FOR CONSTRUCTION ON:

BRIDGE PREVENTATIVE MAINTENANCE PROJECT

LOCATIONS THROUGHOUT TEHAMA COUNTY, CALIFORNIA

FEDERAL PROJECT NUMBER: BRLS 5908(081)
COUNTY PROJECT NUMBER: 599990A

for which bids are to be opened at the County Department of Public Works office, in Gerber, California, at **3:00PM**, (PST) on **October 12, 2016.**

NOW, THEREFORE, if the aforesaid Principal is awarded the contract and, within the time and manner required under the specifications after the prescribed forms are presented to him for signature, enters into a written contract, in the prescribed form, in accordance with the bid, and files the two bonds with the County; one to guarantee faithful performance and the other to guarantee payment for labor and materials, as required by law, then this obligation shall be null and void; otherwise, it shall remain in full force.

In the event suit is brought upon this bond by the County and judgment is recovered, the Surety shall pay all costs incurred by the County in such suit, including attorney's fee to be fixed by the Court.

Dated: _____ , 20_____

(SEAL)

_____
Bidder

By: _____
Principal

_____
Surety

By: _____
Attorney-in-fact

NOTE: Signatures of those executing for the surety must be properly acknowledged.

CERTIFICATE OF ACKNOWLEDGEMENT

A notary public or other officer completing this certificate verifies only the identity of the individual who signed the document to which this certificate is attached, and not the truthfulness, accuracy, or validity of that document.

State of California
County of SS

On this _____day of _____ in the year 20_____ before me

_____, personally appeared _____,
Attorney-in-fact

personally known to me (or proved to me on the basis of satisfactory evidence) to be the person whose name is subscribed to this instrument as the attorney-in-fact of , and acknowledged to me that he (she) subscribed the name of the said company thereto as surety, and his (her) own name as attorney-in-fact.

(SEAL) _____
Notary Public

Page Intentionally
Left Blank

COUNTY OF TEHAMA
DEPARTMENT OF PUBLIC WORKS

OWNER-CONTRACTOR AGREEMENT

COUNTY PROJECT NUMBER: 599990A

ROAD AGREEMENT #: _____

THIS AGREEMENT, made and concluded, in triplicate, on _____between the County of Tehama, hereinafter called "County", and _____, hereinafter called "Contractor".

ARTICLE I.-- The Contractor agrees to do all the work and furnish all the materials, except such as are mentioned in the specifications to be furnished by the County, necessary to construct and complete in a good, workmanlike and substantial manner and to the satisfaction of the County, free of any and all liens and claims of laborers, materialmen, suppliers, and subcontractors, and in conformity with all applicable state, county, and municipal laws, codes, and regulations, the work described in the Contract Documents. The work shall be done and the materials furnished in accordance with the Special Provisions and Project Plans described below, including any addenda thereto, and also in accordance with the Standard Specifications for Construction dated May 2010 and the Standard Plans for Construction, dated 2010 of the California Department of Transportation and the Labor Surcharge And Equipment Rental Rates in effect on the date the work is accomplished, which said Special Provisions, Project Plans, Standard Plans, Standard Specifications, and Labor Surcharge And Equipment Rental Rates are hereby specially referred to and by such reference made a part hereof.

The Special Provisions for the work to be done are dated 8/12/2016 and are entitled:

COUNTY OF TEHAMA, DEPARTMENT OF PUBLIC WORKS
NOTICE TO BIDDERS, SPECIAL PROVISIONS, AND PROPOSAL,
FOR CONSTRUCTION ON:

BRIDGE PREVENTATIVE MAINTENANCE PROJECT

LOCATIONS THROUGHOUT TEHAMA COUNTY, CALIFORNIA

FEDERAL-AID PROJECT NUMBER: BRLS 5908(081)
COUNTY PROJECT NUMBER: 599990A

The project plans for the work to be done were approved **9/20/2016** and are entitled:

COUNTY OF TEHAMA, DEPARTMENT OF PUBLIC WORKS
CONSTRUCTION PLANS FOR

BRIDGE PREVENTATIVE MAINTENANCE PROJECT

FEDERAL-AID PROJECT NUMBER: BRLS 5908(081)
COUNTY PROJECT NUMBER: 599990A

ARTICLE II.-- The County hereby promises and agrees with the Contractor to employ, and does hereby employ, the Contractor to provide the materials and to do the work according to the terms and conditions herein contained and referred to, for the prices hereinafter set forth, and hereby contracts to pay the same at the time, in the manner and upon the conditions herein set forth; and the said parties for themselves, their heirs, executors, administrators, successors and assigns, do hereby agree to the full performance of the covenants herein contained.

ARTICLE III.— The higher of the State or the Federal prevailing wage rates as referenced in this set of contract documents are hereby made a part of this contract, and Contractor shall pay and require all subcontractors to pay the higher of the State or Federal prevailing wage rates to the construction workers providing labor for the work. It is further expressly agreed by and between the parties hereto that should there be any conflict between the terms of this instrument and the bid or proposal of said Contractor, then this instrument shall control and nothing herein shall be considered as an acceptance of the said terms of said proposal conflicting herewith.

ARTICLE IV.-- By my signature hereunder, as Contractor, I certify that I am aware of the provisions of Section 3700 of the Labor Code which require every employer to be insured against liability for worker's compensation or to undertake self-insurance in accordance with the provisions of that code, and I will comply with such provisions before commencing the performance of the work of this contract.

ARTICLE V.-- And the said Contractor agrees to receive and accept the following prices as full compensation for furnishing all materials and for doing all the work contemplated and embraced in this agreement; also for all loss or damage, arising out of the nature of the work aforesaid, or from the action of the elements, or from any unforeseen difficulties or obstructions which may arise or be encountered in the prosecution of the work until its acceptance by the County, and for all risks of every description connected with the work; also for all expenses incurred by or in consequence of the suspension or discontinuance of work and for well and faithfully completing the work, and the whole thereof, in the manner and according to the plans and specifications, and the requirements of the Engineer under them, to wit:

///
///
///
///
///
///
///
///
///
///
///
///
///
///
///
///
///
///
///

BID ITEM LIST

Bid Item List to be inserted
Completed
at Award of Contract

Bid Item List to be inserted
Completed
at Award of Contract

IN WITNESS WHEREOF, the Parties to these presents have hereunto set their hands the year and date first above written

COUNTY OF TEHAMA

STATE OF CALIFORNIA

(SEAL) _____

Chairperson
Board of Supervisors

_____

Date

CONTRACTOR

(SEAL) _____

Signature

_____

Name

_____

Title

_____

Date

Licensed in accordance with and providing for the registration of contractors:

License No.: _____

Federal ID No. _____

DUNS Number (if applicable): _____

Approved as to Form:

_____

Tehama County Counsel

Date

COUNTY OF TEHAMA, DEPARTMENT OF PUBLIC WORKS

PAYMENT BOND

(PAYMENT BOND TO ACCOMPANY CONTRACT) (SECTION 3247, CIVIL CODE)

BOND NO._____

KNOW ALL MEN BY THESE PRESENTS, THAT:

WHEREAS, The County of Tehama, has awarded to _____ as Contractor, a contract for the work described as follows:

COUNTY OF TEHAMA, DEPARTMENT OF PUBLIC WORKS
NOTICE TO BIDDERS, SPECIAL PROVISIONS, AND CONSTRUCTION PLANS
FOR CONSTRUCTION ON:

BRIDGE PREVENTATIVE MAINTENANCE PROJECT

LOCATIONS THROUGHOUT TEHAMA COUNTY, CALIFORNIA

FEDERAL-AID PROJECT NUMBER: BRLS 5908(081)
COUNTY PROJECT NUMBER: 599990A

AND WHEREAS, said Contractor is required to furnish a bond in connection with said contract in an amount equal to 100% of the bid amount, to secure the payment of claims of laborers, mechanics, material men and other persons as provided by law;

NOW, THEREFORE, we the undersigned Contractor and Surety are held and firmly bound unto the County of Tehama in the sum of

_____ for which payment well and truly to be made we bind ourselves, our heirs, executors and administrators, successors and assigns, jointly and severally, firmly by these presents.

THE CONDITION OF THIS OBLIGATION IS SUCH,

That if said Contractor, his or its heirs, executors, administrators, successors or assigns, or its subcontractors shall fail to pay any of the persons named in Civil Code Section 3181, or amounts due under the Unemployment Insurance Code with respect to work or labor performed by such claimant, or any amounts required to be deducted, withheld, and paid over to the Franchise Tax Board for the wages of employees of the Contractor and his subcontractors pursuant to Section 18806 of the Revenue and Taxation Code, with respect to such work and labor, that the surety herein will pay for the same in an amount not exceeding the sum specified in this bond, otherwise the above obligation shall be void. In case suit is brought upon this bond, the surety will pay a reasonable attorney's fee to fixed by the court.

This bond shall inure to the benefit of any of the persons named in Civil Code Section 3181 as to give a right of action to such persons or their assigns in any suit brought upon this bond.

Dated: _____ , 20_____

Correspondence or claims relating to this bond should be sent to the surety at the following address:

_____
Contractor

_____ _____
Surety (SEAL)

_____

_____ _____
By: Attorney-in-Fact

_____

NOTE: Signatures of those executing for the surety must be properly acknowledged.

CERTIFICATE OF ACKNOWLEDGMENT

A notary public or other officer completing this certificate verifies only the identity of the individual who signed the document to which this certificate is attached, and not the truthfulness, accuracy, or validity of that document.

State of California, City / County of _____ SS

On this _____ day of _____ in the year 20 ___ before me _____,

personally appeared _____, personally known to me (or proved to me
Attorney-in-fact

on the basis of satisfactory evidence) to be the person whose name is subscribed to this instrument as the Attorney-in-fact of _____ and acknowledged to me that he/she subscribed the name of the said company thereto as surety, and his/her own name as Attorney-in-fact.

_____

(SEAL) Notary Public

COUNTY OF TEHAMA, DEPARTMENT OF PUBLIC WORKS

PERFORMANCE BOND

(PERFORMANCE BOND TO ACCOMPANY CONTRACT)

BOND NUMBER:_____

KNOW ALL MEN BY THESE PRESENTS:

WHEREAS, The County of Tehama has awarded _____ as Contractor, a contract for the work described as follows:

COUNTY OF TEHAMA, DEPARTMENT OF PUBLIC WORKS
NOTICE TO BIDDERS, SPECIAL PROVISIONS, PROPOSAL AND CONSTRUCTION PLANS
FOR CONSTRUCTION ON:

BRIDGE PREVENTATIVE MAINTENANCE PROJECT

LOCATIONS THROUGHOUT TEHAMA COUNTY, CALIFORNIA

FEDERAL-AID PROJECT NUMBER: BRLS 5908(081)

COUNTY PROJECT NUMBER: 599990A

WHEREAS, The Contractor is required to furnish a bond in connection with said contract in an amount equal to 100% of the bid amount, guaranteeing the faithful performance thereof:

NOW, THEREFORE, We the undersigned Contractor and surety are held and firmly bound unto the County of Tehama in the sum of _____ to be paid to said County or its certain attorney, its successors and assigns: for which payment, well and truly to be made, we bind ourselves, our heirs, executors and administrators, successors or assigns, jointly and severally, firmly by these presents.

THE CONDITION OF THIS OBLIGATION IS SUCH,

That if the above bounded Contractor, his or its heirs, executors, administrators, successors or assigns, shall in all things stand to and abide by, and well and truly keep and perform the covenants, conditions and agreements in the foregoing contract and any alteration thereof made as therein provided, on his or their part to be kept and performed at the time and in the manner therein specified, and in all respects according to their intent and meaning, and shall indemnify and save harmless the County of Tehama , its officers and agents, as therein stipulated, then this obligation shall become and be null and void; otherwise it shall be and remain in full force and virtue.

IN WITNESS WHEREOF, We have hereunto set our hands and seals on this _____ day of _____, 20___.

Correspondence or claims relating to this bond should be sent to the surety at the following address:

_____
Contractor

_____

_____
Name of Surety (SEAL)

_____

_____

_____
By: Attorney-in-Fact

NOTE: Signatures of those executing for the surety must be properly acknowledged.

CERTIFICATE OF ACKNOWLEDGMENT

A notary public or other officer completing this certificate verifies only the identity of the individual who signed the document to which this certificate is attached, and not the truthfulness, accuracy, or validity of that document.

State of California, City / County of _____ SS

On this _____ day of _____ in the year 20 ___ before me _____,
A notary public in and for the City / County of _____personally
appeared _____, Known to me to be the person whose
Attorney-in-fact
name is subscribed to this instrument as the Attorney-in-fact of _____
and acknowledged to me that he/she subscribed the name of the said company thereto as surety, and his/her own name as Attorney-in-fact.

_____

(SEAL) Notary Public

The required provisions in FORM FHWA-1273 shall now include the following clause:

CARGO PREFERENCE

Use of United States-flag vessels: The contractor agrees—

"(1) To utilize privately owned United States-flag commercial vessels to ship at least 50 percent of the gross tonnage (computed separately for dry bulk carriers, dry cargo liners, and tankers) involved, whenever shipping any equipment, material, or commodities pursuant to this contract, to the extent such vessels are available at fair and reasonable rates for United States-flag commercial vessels.

"(2) To furnish within 20 days following the date of loading for shipments originating within the United States or within 30 working days following the date of loading for shipments originating outside the United States, a legible copy of a rated, 'on-board' commercial ocean bill-of-lading in English for each shipment of cargo described in paragraph (b) (1) of this section to both the Contracting Officer (through the prime contractor in the case of subcontractor bills-of-lading) and to the Division of National Cargo, Office of Market Development, Maritime Administration, Washington, DC 20590.
"(3) To insert the substance of the provisions of this clause in all subcontracts issued pursuant to this contract."

May 1, 2012

FORM FHWA- 1273

I. General
II. Nondiscrimination
III. Nonsegregated Facilities
IV. Davis-Bacon and Related Act Provisions
V. Contract Work Hours and Safety Standards Act Provisions
VI. Subletting or Assigning the Contract
VII. Safety: Accident Prevention
VIII. False Statements Concerning Highway Projects
IX. Implementation of Clean Air Act and Federal Water Pollution Control Act
X. Compliance with Governmentwide Suspension and Debarment Requirements
XI. Certification Regarding Use of Contract Funds for Lobbying

ATTACHMENTS

A. Employment and Materials Preference for Appalachian Development Highway System or Appalachian Local Access Road Contracts (included in Appalachian contracts only)

I. General

1. Form FHWA-1273 must be physically incorporated in each construction contract funded under Title 23 (excluding emergency contracts solely intended for debris removal). The contractor (or subcontractor) must insert this form in each subcontract and further require its inclusion in all lower tier subcontracts (excluding purchase orders, rental agreements and other agreements for supplies or services).

The applicable requirements of Form FHWA-1273 are incorporated by reference for work done under any purchase order, rental agreement or agreement for other services. The prime contractor shall be responsible for compliance by any subcontractor, lower-tier subcontractor or service provider.

Form FHWA-1273 must be included in all Federal-aid design-build contracts, in all subcontracts and in lower tier subcontracts (excluding subcontracts for design services, purchase orders, rental agreements and other agreements for supplies or services). The design-builder shall be responsible for compliance by any subcontractor, lower-tier subcontractor or service provider.

Contracting agencies may reference Form FHWA-1273 in bid proposal or request for proposal documents, however, the Form FHWA-1273 must be physically incorporated (not referenced) in all contracts, subcontracts and lower-tier subcontracts (excluding purchase orders, rental agreements and other agreements for supplies or services related to a construction contract).

2. Subject to the applicability criteria noted in the following sections, these contract provisions shall apply to all work performed on the contract by the contractor's own organization and with the assistance of workers under the contractor's immediate superintendence and to all work performed on the contract by piecework, station work, or by subcontract.

3. A breach of any of the stipulations contained in these Required Contract Provisions may be sufficient grounds for withholding of progress payments, withholding of final payment, termination of the contract, suspension / debarment or any other action determined to be appropriate by the contracting agency and FHWA.

4. Selection of Labor: During the performance of this contract, the contractor shall not use convict labor for any purpose within the limits of a construction project on a Federal-aid highway unless it is labor performed by convicts who are on parole, supervised release, or probation. The term Federal-aid highway does not include roadways functionally classified as local roads or rural minor collectors.

II. Nondiscrimination

The provisions of this section related to 23 CFR Part 230 are applicable to all Federal-aid construction contracts and to all related construction subcontracts of $10,000 or more. The provisions of 23 CFR Part 230 are not applicable to material supply, engineering, or architectural service contracts.

In addition, the contractor and all subcontractors must comply with the following policies: Executive Order 11246, 41 CFR 60, 29 CFR 1625-1627, Title 23 USC Section 140, the Rehabilitation Act of 1973, as amended (29 USC 794), Title VI of the Civil Rights Act of 1964, as amended, and related regulations including 49 CFR Parts 21, 26 and 27; and 23 CFR Parts 200, 230, and 633.

The contractor and all subcontractors must comply with: the requirements of the Equal Opportunity Clause in 41 CFR 60-1.4(b) and, for all construction contracts exceeding $10,000, the Standard Federal Equal Employment Opportunity Construction Contract Specifications in 41 CFR 60-4.3.

Note: The U.S. Department of Labor has exclusive authority to determine compliance with Executive Order 11246 and the policies of the Secretary of Labor including 41 CFR 60, and 29 CFR 1625-1627. The contracting agency and the FHWA have the authority and the responsibility to ensure compliance with Title 23 USC Section 140, the Rehabilitation Act of 1973, as amended (29 USC 794), and Title VI of the Civil Rights Act of 1964, as amended, and related regulations including 49 CFR Parts 21, 26 and 27; and 23 CFR Parts 200, 230, and 633.

The following provision is adopted from 23 CFR 230, Appendix A, with appropriate revisions to conform to the U.S. Department of Labor (US DOL) and FHWA requirements.

1. Equal Employment Opportunity: Equal employment opportunity (EEO) requirements not to discriminate and to take affirmative action to assure equal opportunity as set forth under laws, executive orders, rules, regulations (28 CFR 35, 29 CFR 1630, 29 CFR 1625-1627, 41 CFR 60 and 49 CFR 27) and orders of the Secretary of Labor as modified by the provisions prescribed herein, and imposed pursuant to 23 U.S.C. 140 shall constitute the EEO and specific affirmative action standards for the contractor's project activities under this contract. The provisions of the Americans with Disabilities Act of 1990 (42 U.S.C. 12101 et seq.) set forth under 28 CFR 35 and 29 CFR 1630 are incorporated by reference in this contract. In the execution of this contract, the contractor agrees to comply with the following minimum specific requirement activities of EEO:

a. The contractor will work with the contracting agency and the Federal Government to ensure that it has made every good faith effort to provide equal opportunity with respect to all of its terms and conditions of employment and in their review of activities under the contract.

b. The contractor will accept as its operating policy the following statement:

"It is the policy of this Company to assure that applicants are employed, and that employees are treated during employment, without regard to their race, religion, sex, color, national origin, age or disability. Such action shall include: employment, upgrading, demotion, or transfer; recruitment or recruitment advertising; layoff or termination; rates of pay or other forms of compensation; and selection for training, including apprenticeship, pre-apprenticeship, and/or on-the-job training."

2. EEO Officer: The contractor will designate and make known to the contracting officers an EEO Officer who will have the responsibility for and must be capable of effectively administering and promoting an active EEO program and who must be assigned adequate authority and responsibility to do so.

3. Dissemination of Policy: All members of the contractor's staff who are authorized to hire, supervise, promote, and discharge employees, or who recommend such action, or who are substantially involved in such action, will be made fully cognizant of, and will implement, the contractor's EEO policy and contractual responsibilities to provide EEO in each grade and classification of employment. To ensure that the above agreement will be met, the following actions will be taken as a minimum:

a. Periodic meetings of supervisory and personnel office employees will be conducted before the start of work and then not less often than once every six months, at which time the contractor's EEO policy and its implementation will be reviewed and explained. The meetings will be conducted by the EEO Officer.

b. All new supervisory or personnel office employees will be given a thorough indoctrination by the EEO Officer, covering all major aspects of the contractor's EEO obligations within thirty days following their reporting for duty with the contractor.

c. All personnel who are engaged in direct recruitment for the project will be instructed by the EEO Officer in the contractor's procedures for locating and hiring minorities and women.

d. Notices and posters setting forth the contractor's EEO policy will be placed in areas readily accessible to employees, applicants for employment and potential employees.

e. The contractor's EEO policy and the procedures to implement such policy will be brought to the attention of employees by means of meetings, employee handbooks, or other appropriate means.

4. Recruitment: When advertising for employees, the contractor will include in all advertisements for employees the notation: "An Equal Opportunity Employer." All such advertisements will be placed in publications having a large circulation among minorities and women in the area from which the project work force would normally be derived.

a. The contractor will, unless precluded by a valid bargaining agreement, conduct systematic and direct recruitment through public and private employee referral sources likely to yield qualified minorities and women. To meet this requirement, the contractor will identify sources of potential minority group employees, and establish with such identified sources procedures whereby minority and women applicants may be referred to the contractor for employment consideration.

b. In the event the contractor has a valid bargaining agreement providing for exclusive hiring hall referrals, the contractor is expected to observe the provisions of that

agreement to the extent that the system meets the contractor's compliance with EEO contract provisions. Where implementation of such an agreement has the effect of discriminating against minorities or women, or obligates the contractor to do the same, such implementation violates Federal nondiscrimination provisions.

c. The contractor will encourage its present employees to refer minorities and women as applicants for employment. Information and procedures with regard to referring such applicants will be discussed with employees.

5. Personnel Actions: Wages, working conditions, and employee benefits shall be established and administered, and personnel actions of every type, including hiring, upgrading, promotion, transfer, demotion, layoff, and termination, shall be taken without regard to race, color, religion, sex, national origin, age or disability. The following procedures shall be followed:

a. The contractor will conduct periodic inspections of project sites to insure that working conditions and employee facilities do not indicate discriminatory treatment of project site personnel.

b. The contractor will periodically evaluate the spread of wages paid within each classification to determine any evidence of discriminatory wage practices.

c. The contractor will periodically review selected personnel actions in depth to determine whether there is evidence of discrimination. Where evidence is found, the contractor will promptly take corrective action. If the review indicates that the discrimination may extend beyond the actions reviewed, such corrective action shall include all affected persons.

d. The contractor will promptly investigate all complaints of alleged discrimination made to the contractor in connection with its obligations under this contract, will attempt to resolve such complaints, and will take appropriate corrective action within a reasonable time. If the investigation indicates that the discrimination may affect persons other than the complainant, such corrective action shall include such other persons. Upon completion of each investigation, the contractor will inform every complainant of all of their avenues of appeal.

6. Training and Promotion:

a. The contractor will assist in locating, qualifying, and increasing the skills of minorities and women who are applicants for employment or current employees. Such efforts should be aimed at developing full journey level status employees in the type of trade or job classification involved.

b. Consistent with the contractor's work force requirements and as permissible under Federal and State regulations, the contractor shall make full use of training programs, i.e., apprenticeship, and on-the-job training programs for the geographical area of contract performance. In the event a special provision for training is provided under this contract, this subparagraph will be superseded as indicated in the special provision. The contracting agency may reserve training positions for persons who receive welfare assistance in accordance with 23 U.S.C. 140(a).

c. The contractor will advise employees and applicants for employment of available training programs and entrance requirements for each.

d. The contractor will periodically review the training and promotion potential of employees who are minorities and women and will encourage eligible employees to apply for such training and promotion.

7. Unions: If the contractor relies in whole or in part upon unions as a source of employees, the contractor will use good faith efforts to obtain the cooperation of such unions to increase opportunities for minorities and women. Actions by the contractor, either directly or through a contractor's association acting as agent, will include the procedures set forth below:

a. The contractor will use good faith efforts to develop, in cooperation with the unions, joint training programs aimed toward qualifying more minorities and women for membership in the unions and increasing the skills of minorities and women so that they may qualify for higher paying employment.

b. The contractor will use good faith efforts to incorporate an EEO clause into each union agreement to the end that such union will be contractually bound to refer applicants without regard to their race, color, religion, sex, national origin, age or disability.

c. The contractor is to obtain information as to the referral practices and policies of the labor union except that to the extent such information is within the exclusive possession of the labor union and such labor union refuses to furnish such information to the contractor, the contractor shall so certify to the contracting agency and shall set forth what efforts have been made to obtain such information.

d. In the event the union is unable to provide the contractor with a reasonable flow of referrals within the time limit set forth in the collective bargaining agreement, the contractor will, through independent recruitment efforts, fill the employment vacancies without regard to race, color, religion, sex, national origin, age or disability; making full efforts to obtain qualified and/or qualifiable minorities and women. The failure of a union to provide sufficient referrals (even though it is obligated to provide exclusive referrals under the terms of a collective bargaining agreement) does not relieve the contractor from the requirements of this paragraph. In the event the union referral practice prevents the contractor from meeting the obligations pursuant to Executive Order 11246, as amended, and these Special Provisions, such contractor shall immediately notify the contracting agency.

8. Reasonable Accommodation for Applicants / Employees with Disabilities: The contractor must be familiar with the requirements for and comply with the Americans with Disabilities Act and all rules and regulations established there under. Employers must provide reasonable accommodation in all employment activities unless to do so would cause an undue hardship.

9. Selection of Subcontractors, Procurement of Materials and Leasing of Equipment: The contractor shall not discriminate on the grounds of race, color, religion, sex, national origin, age or disability in the selection and retention of subcontractors, including procurement of materials and leases of equipment. The contractor shall take all necessary and reasonable steps to ensure nondiscrimination in the administration of this contract.

a. The contractor shall notify all potential subcontractors and suppliers and lessors of their EEO obligations under this contract.

b. The contractor will use good faith efforts to ensure subcontractor compliance with their EEO obligations.

10. Assurance Required by 49 CFR 26.13(b):

a. The requirements of 49 CFR Part 26 and the State DOT's U.S. DOT-approved DBE program are incorporated by reference.

b. The contractor or subcontractor shall not discriminate on the basis of race, color, national origin, or sex in the performance of this contract. The contractor shall carry out applicable requirements of 49 CFR Part 26 in the award and administration of DOT-assisted contracts. Failure by the contractor to carry out these requirements is a material breach of this contract, which may result in the termination of this contract or such other remedy as the contracting agency deems appropriate.

11. Records and Reports: The contractor shall keep such records as necessary to document compliance with the EEO requirements. Such records shall be retained for a period of three years following the date of the final payment to the contractor for all contract work and shall be available at reasonable times and places for inspection by authorized representatives of the contracting agency and the FHWA.

a. The records kept by the contractor shall document the following:

(1) The number and work hours of minority and non-minority group members and women employed in each work classification on the project;

(2) The progress and efforts being made in cooperation with unions, when applicable, to increase employment opportunities for minorities and women; and

(3) The progress and efforts being made in locating, hiring, training, qualifying, and upgrading minorities and women;

b. The contractors and subcontractors will submit an annual report to the contracting agency each July for the duration of the project, indicating the number of minority, women, and non-minority group employees currently engaged in each work classification required by the contract work. This information is to be reported on Form FHWA-1391. The staffing data should represent the project work force on board in all or any part of the last payroll period preceding the end of July. If on-the-job training is being required by special provision, the contractor will be required to collect and report training data. The employment data should reflect the work force on board during all or any part of the last payroll period preceding the end of July.

III. NonSegregated Facilities

This provision is applicable to all Federal-aid construction contracts and to all related construction subcontracts of $10,000 or more.

The contractor must ensure that facilities provided for employees are provided in such a manner that segregation on the basis of race, color, religion, sex, or national origin cannot result. The contractor may neither require such segregated use by written or oral policies nor tolerate such use by employee custom. The contractor's obligation extends further to ensure that its employees are not assigned to perform their services at any location, under the contractor's control, where the facilities are segregated. The term "facilities" includes waiting rooms, work areas, restaurants and other eating areas, time clocks, restrooms, washrooms, locker rooms, and other storage or dressing areas, parking lots, drinking fountains, recreation or entertainment areas, transportation, and housing provided for employees. The contractor shall provide separate or single-user restrooms and necessary dressing or sleeping areas to assure privacy between sexes.

IV. Davis-Bacon and Related Act Provisions

This section is applicable to all Federal-aid construction projects exceeding $2,000 and to all related subcontracts and lower-tier subcontracts (regardless of subcontract size). The requirements apply to all projects located within the right-of-way of a roadway that is functionally classified as Federal-aid highway. This excludes roadways functionally classified as local roads or rural minor collectors, which are exempt. Contracting agencies may elect to apply these requirements to other projects.

The following provisions are from the U.S. Department of Labor regulations in 29 CFR 5.5 "Contract provisions and related matters" with minor revisions to conform to the FHWA-1273 format and FHWA program requirements.

1. Minimum wages

a. All laborers and mechanics employed or working upon the site of the work, will be paid unconditionally and not less often than once a week, and without subsequent deduction or rebate on any account (except such payroll deductions as are permitted by regulations issued by the Secretary of Labor under the Copeland Act (29 CFR part 3)), the full amount of wages and bona fide fringe benefits (or cash equivalents thereof) due at time of payment computed at rates not less than those contained in the wage determination of the Secretary of Labor which is attached hereto and made a part hereof, regardless of any contractual relationship which may be alleged to exist between the contractor and such laborers and mechanics.

Contributions made or costs reasonably anticipated for bona fide fringe benefits under section 1(b)(2) of the Davis-Bacon Act on behalf of laborers or mechanics are considered wages paid to such laborers or mechanics, subject to the provisions of paragraph 1.d. of this section; also, regular contributions made or costs incurred for more than a weekly period (but not less often than quarterly)

under plans, funds, or programs which cover the particular weekly period, are deemed to be constructively made or incurred during such weekly period. Such laborers and mechanics shall be paid the appropriate wage rate and fringe benefits on the wage determination for the classification of work actually performed, without regard to skill, except as provided in 29 CFR 5.5(a)(4). Laborers or mechanics performing work in more than one classification may be compensated at the rate specified for each classification for the time actually worked therein: Provided, That the employer's payroll records accurately set forth the time spent in each classification in which work is performed. The wage determination (including any additional classification and wage rates conformed under paragraph 1.b. of this section) and the Davis-Bacon poster (WH–1321) shall be posted at all times by the contractor and its subcontractors at the site of the work in a prominent and accessible place where it can be easily seen by the workers.

b. (1) The contracting officer shall require that any class of laborers or mechanics, including helpers, which is not listed in the wage determination and which is to be employed under the contract shall be classified in conformance with the wage determination. The contracting officer shall approve an additional classification and wage rate and fringe benefits therefore only when the following criteria have been met:

(i) The work to be performed by the classification requested is not performed by a classification in the wage determination; and

(ii) The classification is utilized in the area by the construction industry; and

(iii) The proposed wage rate, including any bona fide fringe benefits, bears a reasonable relationship to the wage rates contained in the wage determination.

(2) If the contractor and the laborers and mechanics to be employed in the classification (if known), or their representatives, and the contracting officer agree on the classification and wage rate (including the amount designated for fringe benefits where appropriate), a report of the action taken shall be sent by the contracting officer to the Administrator of the Wage and Hour Division, Employment Standards Administration, U.S. Department of Labor, Washington, DC 20210. The Administrator, or an authorized representative, will approve, modify, or disapprove every additional classification action within 30 days of receipt and so advise the contracting officer or will notify the contracting officer within the 30-day period that additional time is necessary.

(3) In the event the contractor, the laborers or mechanics to be employed in the classification or their representatives, and the contracting officer do not agree on the proposed classification and wage rate (including the amount designated for fringe benefits, where appropriate), the contracting officer shall refer the questions, including the views of all interested parties and the recommendation of the contracting officer, to the Wage and Hour Administrator for determination. The Wage and Hour Administrator, or an authorized representative, will issue a determination within 30 days of receipt and so advise the contracting officer or will notify the contracting officer within the 30-day period that additional time is necessary.

(4) The wage rate (including fringe benefits where appropriate) determined pursuant to paragraphs 1.b.(2) or 1.b.(3) of this section, shall be paid to all workers performing work in the classification under this contract from the first day on which work is performed in the classification.

c. Whenever the minimum wage rate prescribed in the contract for a class of laborers or mechanics includes a fringe benefit which is not expressed as an hourly rate, the contractor shall either pay the benefit as stated in the wage determination or shall pay another bona fide fringe benefit or an hourly cash equivalent thereof.

d. If the contractor does not make payments to a trustee or other third person, the contractor may consider as part of the wages of any laborer or mechanic the amount of any costs reasonably anticipated in providing bona fide fringe benefits under a plan or program, Provided, That the Secretary of Labor has found, upon the written request of the contractor, that the applicable standards of the Davis-Bacon Act have been met. The Secretary of Labor may require the contractor to set aside in a separate account assets for the meeting of obligations under the plan or program.

2. Withholding

The contracting agency shall upon its own action or upon written request of an authorized representative of the Department of Labor, withhold or cause to be withheld from the contractor under this contract, or any other Federal contract with the same prime contractor, or any other federally-assisted contract subject to Davis-Bacon prevailing wage requirements, which is held by the same prime contractor, so much of the accrued payments or advances as may be considered necessary to pay laborers and mechanics, including apprentices, trainees, and helpers, employed by the contractor or any subcontractor the full amount of wages required by the contract. In the event of failure to pay any laborer or mechanic, including any apprentice, trainee, or helper, employed or working on the site of the work, all or part of the wages required by the contract, the contracting agency may, after written notice to the contractor, take such action as may be necessary to cause the suspension of any further payment, advance, or guarantee of funds until such violations have ceased.

3. Payrolls and basic records

a. Payrolls and basic records relating thereto shall be maintained by the contractor during the course of the work and preserved for a period of three years thereafter for all laborers and mechanics working at the site of the work. Such records shall contain the name, address, and social security number of each such worker, his or her correct classification, hourly rates of wages paid (including rates of contributions or costs anticipated for bona fide fringe benefits or cash equivalents thereof of the types described in section 1(b)(2)(B) of the Davis-Bacon Act), daily and weekly number of hours worked, deductions made and

actual wages paid. Whenever the Secretary of Labor has found under 29 CFR 5.5(a)(1)(iv) that the wages of any laborer or mechanic include the amount of any costs reasonably anticipated in providing benefits under a plan or program described in section 1(b)(2)(B) of the Davis-Bacon Act, the contractor shall maintain records which show that the commitment to provide such benefits is enforceable, that the plan or program is financially responsible, and that the plan or program has been communicated in writing to the laborers or mechanics affected, and records which show the costs anticipated or the actual cost incurred in providing such benefits. Contractors employing apprentices or trainees under approved programs shall maintain written evidence of the registration of apprenticeship programs and certification of trainee programs, the registration of the apprentices and trainees, and the ratios and wage rates prescribed in the applicable programs.

b. (1) The contractor shall submit weekly for each week in which any contract work is performed a copy of all payrolls to the contracting agency. The payrolls submitted shall set out accurately and completely all of the information required to be maintained under 29 CFR 5.5(a)(3)(i), except that full social security numbers and home addresses shall not be included on weekly transmittals. Instead the payrolls shall only need to include an individually identifying number for each employee (e.g. , the last four digits of the employee's social security number). The required weekly payroll information may be submitted in any form desired. Optional Form WH–347 is available for this purpose from the Wage and Hour Division Web site at http://www.dol.gov/esa/whd/forms/wh347instr.htm or its successor site. The prime contractor is responsible for the submission of copies of payrolls by all subcontractors. Contractors and subcontractors shall maintain the full social security number and current address of each covered worker, and shall provide them upon request to the contracting agency for transmission to the State DOT, the FHWA or the Wage and Hour Division of the Department of Labor for purposes of an investigation or audit of compliance with prevailing wage requirements. It is not a violation of this section for a prime contractor to require a subcontractor to provide addresses and social security numbers to the prime contractor for its own records, without weekly submission to the contracting agency..

(2) Each payroll submitted shall be accompanied by a "Statement of Compliance," signed by the contractor or subcontractor or his or her agent who pays or supervises the payment of the persons employed under the contract and shall certify the following:

(i) That the payroll for the payroll period contains the information required to be provided under §5.5 (a)(3)(ii) of Regulations, 29 CFR part 5, the appropriate information is being maintained under §5.5 (a)(3)(i) of Regulations, 29 CFR part 5, and that such information is correct and complete;

(ii) That each laborer or mechanic (including each helper, apprentice, and trainee) employed on the contract during the payroll period has been paid the full weekly wages earned, without rebate, either directly or indirectly, and that no deductions have been made either directly or indirectly from the full wages earned, other than permissible deductions as set forth in Regulations, 29 CFR part 3;

(iii) That each laborer or mechanic has been paid not less than the applicable wage rates and fringe benefits or cash equivalents for the classification of work performed, as specified in the applicable wage determination incorporated into the contract.

(3) The weekly submission of a properly executed certification set forth on the reverse side of Optional Form WH–347 shall satisfy the requirement for submission of the "Statement of Compliance" required by paragraph 3.b.(2) of this section.

(4) The falsification of any of the above certifications may subject the contractor or subcontractor to civil or criminal prosecution under section 1001 of title 18 and section 231 of title 31 of the United States Code.

c. The contractor or subcontractor shall make the records required under paragraph 3.a. of this section available for inspection, copying, or transcription by authorized representatives of the contracting agency, the State DOT, the FHWA, or the Department of Labor, and shall permit such representatives to interview employees during working hours on the job. If the contractor or subcontractor fails to submit the required records or to make them available, the FHWA may, after written notice to the contractor, the contracting agency or the State DOT, take such action as may be necessary to cause the suspension of any further payment, advance, or guarantee of funds. Furthermore, failure to submit the required records upon request or to make such records available may be grounds for debarment action pursuant to 29 CFR 5.12.

4. Apprentices and trainees

a. Apprentices (programs of the USDOL).

Apprentices will be permitted to work at less than the predetermined rate for the work they performed when they are employed pursuant to and individually registered in a bona fide apprenticeship program registered with the U.S. Department of Labor, Employment and Training Administration, Office of Apprenticeship Training, Employer and Labor Services, or with a State Apprenticeship Agency recognized by the Office, or if a person is employed in his or her first 90 days of probationary employment as an apprentice in such an apprenticeship program, who is not individually registered in the program, but who has been certified by the Office of Apprenticeship Training, Employer and Labor Services or a State Apprenticeship Agency (where appropriate) to be eligible for probationary employment as an apprentice.

The allowable ratio of apprentices to journeymen on the job site in any craft classification shall not be greater than the ratio permitted to the contractor as to the entire work force under the registered program. Any worker listed on a payroll at an apprentice wage rate, who is not registered or otherwise employed as stated above, shall be paid not less than the applicable wage rate on the wage determination

for the classification of work actually performed. In addition, any apprentice performing work on the job site in excess of the ratio permitted under the registered program shall be paid not less than the applicable wage rate on the wage determination for the work actually performed. Where a contractor is performing construction on a project in a locality other than that in which its program is registered, the ratios and wage rates (expressed in percentages of the journeyman's hourly rate) specified in the contractor's or subcontractor's registered program shall be observed.

Every apprentice must be paid at not less than the rate specified in the registered program for the apprentice's level of progress, expressed as a percentage of the journeymen hourly rate specified in the applicable wage determination. Apprentices shall be paid fringe benefits in accordance with the provisions of the apprenticeship program. If the apprenticeship program does not specify fringe benefits, apprentices must be paid the full amount of fringe benefits listed on the wage determination for the applicable classification. If the Administrator determines that a different practice prevails for the applicable apprentice classification, fringes shall be paid in accordance with that determination.

In the event the Office of Apprenticeship Training, Employer and Labor Services, or a State Apprenticeship Agency recognized by the Office, withdraws approval of an apprenticeship program, the contractor will no longer be permitted to utilize apprentices at less than the applicable predetermined rate for the work performed until an acceptable program is approved.

b. Trainees (programs of the USDOL).

Except as provided in 29 CFR 5.16, trainees will not be permitted to work at less than the predetermined rate for the work performed unless they are employed pursuant to and individually registered in a program which has received prior approval, evidenced by formal certification by the U.S. Department of Labor, Employment and Training Administration.

The ratio of trainees to journeymen on the job site shall not be greater than permitted under the plan approved by the Employment and Training Administration.

Every trainee must be paid at not less than the rate specified in the approved program for the trainee's level of progress, expressed as a percentage of the journeyman hourly rate specified in the applicable wage determination. Trainees shall be paid fringe benefits in accordance with the provisions of the trainee program. If the trainee program does not mention fringe benefits, trainees shall be paid the full amount of fringe benefits listed on the wage determination unless the Administrator of the Wage and Hour Division determines that there is an apprenticeship program associated with the corresponding journeyman wage rate on the wage determination which provides for less than full fringe benefits for apprentices. Any employee listed on the payroll at a trainee rate who is not registered and participating in a training plan approved by the Employment and Training Administration shall be paid not less than the applicable wage rate on the wage determination for the classification of work actually performed. In addition, any trainee performing work on the job site in excess of the ratio permitted under the registered program shall be paid not less than the applicable wage rate on the wage determination for the work actually performed.

In the event the Employment and Training Administration withdraws approval of a training program, the contractor will no longer be permitted to utilize trainees at less than the applicable predetermined rate for the work performed until an acceptable program is approved.

c. Equal employment opportunity. The utilization of apprentices, trainees and journeymen under this part shall be in conformity with the equal employment opportunity requirements of Executive Order 11246, as amended, and 29 CFR part 30.

d. Apprentices and Trainees (programs of the U.S. DOT).

Apprentices and trainees working under apprenticeship and skill training programs which have been certified by the Secretary of Transportation as promoting EEO in connection with Federal-aid highway construction programs are not subject to the requirements of paragraph 4 of this Section IV. The straight time hourly wage rates for apprentices and trainees under such programs will be established by the particular programs. The ratio of apprentices and trainees to journeymen shall not be greater than permitted by the terms of the particular program.

5. Compliance with Copeland Act requirements. The contractor shall comply with the requirements of 29 CFR part 3, which are incorporated by reference in this contract.

6. Subcontracts. The contractor or subcontractor shall insert Form FHWA-1273 in any subcontracts and also require the subcontractors to include Form FHWA-1273 in any lower tier subcontracts. The prime contractor shall be responsible for the compliance by any subcontractor or lower tier subcontractor with all the contract clauses in 29 CFR 5.5.

7. Contract termination: debarment. A breach of the contract clauses in 29 CFR 5.5 may be grounds for termination of the contract, and for debarment as a contractor and a subcontractor as provided in 29 CFR 5.12.

8. Compliance with Davis-Bacon and Related Act requirements. All rulings and interpretations of the Davis-Bacon and Related Acts contained in 29 CFR parts 1, 3, and 5 are herein incorporated by reference in this contract.

9. Disputes concerning labor standards. Disputes arising out of the labor standards provisions of this contract shall not be subject to the general disputes clause of this contract. Such disputes shall be resolved in accordance with the procedures of the Department of Labor set forth in 29 CFR parts 5, 6, and 7. Disputes within the meaning of this clause include disputes between the contractor (or any of its subcontractors) and the contracting agency, the U.S. Department of Labor, or the employees or their representatives.

10. Certification of eligibility.

a. By entering into this contract, the contractor certifies that neither it (nor he or she) nor any person or firm who has an interest in the contractor's firm is a person or firm ineligible to be awarded Government contracts by virtue of section 3(a) of the Davis-Bacon Act or 29 CFR 5.12(a)(1).

b. No part of this contract shall be subcontracted to any person or firm ineligible for award of a Government contract by virtue of section 3(a) of the Davis-Bacon Act or 29 CFR 5.12(a)(1).

c. The penalty for making false statements is prescribed in the U.S. Criminal Code, 18 U.S.C. 1001.

V. Contract Work Hours And Safety Standards Act

The following clauses apply to any Federal-aid construction contract in an amount in excess of $100,000 and subject to the overtime provisions of the Contract Work Hours and Safety Standards Act. These clauses shall be inserted in addition to the clauses required by 29 CFR 5.5(a) or 29 CFR 4.6. As used in this paragraph, the terms laborers and mechanics include watchmen and guards.

1. Overtime requirements. No contractor or subcontractor contracting for any part of the contract work which may require or involve the employment of laborers or mechanics shall require or permit any such laborer or mechanic in any workweek in which he or she is employed on such work to work in excess of forty hours in such workweek unless such laborer or mechanic receives compensation at a rate not less than one and one-half times the basic rate of pay for all hours worked in excess of forty hours in such workweek.

2. Violation; liability for unpaid wages; liquidated damages. In the event of any violation of the clause set forth in paragraph (1.) of this section, the contractor and any subcontractor responsible therefor shall be liable for the unpaid wages. In addition, such contractor and subcontractor shall be liable to the United States (in the case of work done under contract for the District of Columbia or a territory, to such District or to such territory), for liquidated damages. Such liquidated damages shall be computed with respect to each individual laborer or mechanic, including watchmen and guards, employed in violation of the clause set forth in paragraph (1.) of this section, in the sum of $10 for each calendar day on which such individual was required or permitted to work in excess of the standard workweek of forty hours without payment of the overtime wages required by the clause set forth in paragraph (1.) of this section.

3. Withholding for unpaid wages and liquidated damages. The FHWA or the contacting agency shall upon its own action or upon written request of an authorized representative of the Department of Labor withhold or cause to be withheld, from any moneys payable on account of work performed by the contractor or subcontractor under any such contract or any other Federal contract with the same prime contractor, or any other federally-assisted contract subject to the Contract Work Hours and Safety Standards Act, which is held by the same prime contractor, such sums as may be determined to be necessary to satisfy any liabilities of such contractor or subcontractor for unpaid wages and liquidated damages as provided in the clause set forth in paragraph (2.) of this section.

4. Subcontracts. The contractor or subcontractor shall insert in any subcontracts the clauses set forth in paragraph (1.) through (4.) of this section and also a clause requiring the subcontractors to include these clauses in any lower tier subcontracts. The prime contractor shall be responsible for compliance by any subcontractor or lower tier subcontractor with the clauses set forth in paragraphs (1.) through (4.) of this section.

VI. Subletting Or Assigning The Contract

This provision is applicable to all Federal-aid construction contracts on the National Highway System.

1. The contractor shall perform with its own organization contract work amounting to not less than 30 percent (or a greater percentage if specified elsewhere in the contract) of the total original contract price, excluding any specialty items designated by the contracting agency. Specialty items may be performed by subcontract and the amount of any such specialty items performed may be deducted from the total original contract price before computing the amount of work required to be performed by the contractor's own organization (23 CFR 635.116).

a. The term “perform work with its own organization” refers to workers employed or leased by the prime contractor, and equipment owned or rented by the prime contractor, with or without operators. Such term does not include employees or equipment of a subcontractor or lower tier subcontractor, agents of the prime contractor, or any other assignees. The term may include payments for the costs of hiring leased employees from an employee leasing firm meeting all relevant Federal and State regulatory requirements. Leased employees may only be included in this term if the prime contractor meets all of the following conditions:

(1) the prime contractor maintains control over the supervision of the day-to-day activities of the leased employees;

(2) the prime contractor remains responsible for the quality of the work of the leased employees;

(3) the prime contractor retains all power to accept or exclude individual employees from work on the project; and

(4) the prime contractor remains ultimately responsible for the payment of predetermined minimum wages, the submission of payrolls, statements of compliance and all other Federal regulatory requirements.

b. "Specialty Items" shall be construed to be limited to work that requires highly specialized knowledge, abilities, or equipment not ordinarily available in the type of contracting organizations qualified and expected to bid or propose on the contract as a whole and in general are to be limited to minor components of the overall contract.

2. The contract amount upon which the requirements set forth in paragraph (1) of Section VI is computed includes

the cost of material and manufactured products which are to be purchased or produced by the contractor under the contract provisions.

3. The contractor shall furnish (a) a competent superintendent or supervisor who is employed by the firm, has full authority to direct performance of the work in accordance with the contract requirements, and is in charge of all construction operations (regardless of who performs the work) and (b) such other of its own organizational resources (supervision, management, and engineering services) as the contracting officer determines is necessary to assure the performance of the contract.

4. No portion of the contract shall be sublet, assigned or otherwise disposed of except with the written consent of the contracting officer, or authorized representative, and such consent when given shall not be construed to relieve the contractor of any responsibility for the fulfillment of the contract. Written consent will be given only after the contracting agency has assured that each subcontract is evidenced in writing and that it contains all pertinent provisions and requirements of the prime contract.

5. The 30% self-performance requirement of paragraph (1) is not applicable to design-build contracts; however, contracting agencies may establish their own self-performance requirements.

VII. Safety: Accident Prevention

This provision is applicable to all Federal-aid construction contracts and to all related subcontracts.

1. In the performance of this contract the contractor shall comply with all applicable Federal, State, and local laws governing safety, health, and sanitation (23 CFR 635). The contractor shall provide all safeguards, safety devices and protective equipment and take any other needed actions as it determines, or as the contracting officer may determine, to be reasonably necessary to protect the life and health of employees on the job and the safety of the public and to protect property in connection with the performance of the work covered by the contract.

2. It is a condition of this contract, and shall be made a condition of each subcontract, which the contractor enters into pursuant to this contract, that the contractor and any subcontractor shall not permit any employee, in performance of the contract, to work in surroundings or under conditions which are unsanitary, hazardous or dangerous to his/her health or safety, as determined under construction safety and health standards (29 CFR 1926) promulgated by the Secretary of Labor, in accordance with Section 107 of the Contract Work Hours and Safety Standards Act (40 U.S.C. 3704).

3. Pursuant to 29 CFR 1926.3, it is a condition of this contract that the Secretary of Labor or authorized representative thereof, shall have right of entry to any site of contract performance to inspect or investigate the matter of compliance with the construction safety and health standards and to carry out the duties of the Secretary under Section 107 of the Contract Work Hours and Safety Standards Act (40 U.S.C.3704).

VIII. False Statements Concerning Highway Projects

This provision is applicable to all Federal-aid construction contracts and to all related subcontracts.

In order to assure high quality and durable construction in conformity with approved plans and specifications and a high degree of reliability on statements and representations made by engineers, contractors, suppliers, and workers on Federal-aid highway projects, it is essential that all persons concerned with the project perform their functions as carefully, thoroughly, and honestly as possible. Willful falsification, distortion, or misrepresentation with respect to any facts related to the project is a violation of Federal law. To prevent any misunderstanding regarding the seriousness of these and similar acts, Form FHWA-1022 shall be posted on each Federal-aid highway project (23 CFR 635) in one or more places where it is readily available to all persons concerned with the project:

18 U.S.C. 1020 reads as follows:

"Whoever, being an officer, agent, or employee of the United States, or of any State or Territory, or whoever, whether a person, association, firm, or corporation, knowingly makes any false statement, false representation, or false report as to the character, quality, quantity, or cost of the material used or to be used, or the quantity or quality of the work performed or to be performed, or the cost thereof in connection with the submission of plans, maps, specifications, contracts, or costs of construction on any highway or related project submitted for approval to the Secretary of Transportation; or

Whoever knowingly makes any false statement, false representation, false report or false claim with respect to the character, quality, quantity, or cost of any work performed or to be performed, or materials furnished or to be furnished, in connection with the construction of any highway or related project approved by the Secretary of Transportation; or

Whoever knowingly makes any false statement or false representation as to material fact in any statement, certificate, or report submitted pursuant to provisions of the Federal-aid Roads Act approved July 1, 1916, (39 Stat. 355), as amended and supplemented;

Shall be fined under this title or imprisoned not more than 5 years or both."

IX. Implementation Of Clean Air Act And Federal Water Pollution Control Act

This provision is applicable to all Federal-aid construction contracts and to all related subcontracts.

By submission of this bid/proposal or the execution of this contract, or subcontract, as appropriate, the bidder, proposer, Federal-aid construction contractor, or subcontractor, as appropriate, will be deemed to have stipulated as follows:

1. That any person who is or will be utilized in the performance of this contract is not prohibited from

receiving an award due to a violation of Section 508 of the Clean Water Act or Section 306 of the Clean Air Act.

2. That the contractor agrees to include or cause to be included the requirements of paragraph (1) of this Section X in every subcontract, and further agrees to take such action as the contracting agency may direct as a means of enforcing such requirements.

X. Certification Regarding Debarment, Suspension, Ineligibility And Voluntary Exclusion

This provision is applicable to all Federal-aid construction contracts, design-build contracts, subcontracts, lower-tier subcontracts, purchase orders, lease agreements, consultant contracts or any other covered transaction requiring FHWA approval or that is estimated to cost $25,000 or more – as defined in 2 CFR Parts 180 and 1200.

1. Instructions for Certification – First Tier Participants:

a. By signing and submitting this proposal, the prospective first tier participant is providing the certification set out below.

b. The inability of a person to provide the certification set out below will not necessarily result in denial of participation in this covered transaction. The prospective first tier participant shall submit an explanation of why it cannot provide the certification set out below. The certification or explanation will be considered in connection with the department or agency's determination whether to enter into this transaction. However, failure of the prospective first tier participant to furnish a certification or an explanation shall disqualify such a person from participation in this transaction.

c. The certification in this clause is a material representation of fact upon which reliance was placed when the contracting agency determined to enter into this transaction. If it is later determined that the prospective participant knowingly rendered an erroneous certification, in addition to other remedies available to the Federal Government, the contracting agency may terminate this transaction for cause of default.

d. The prospective first tier participant shall provide immediate written notice to the contracting agency to whom this proposal is submitted if any time the prospective first tier participant learns that its certification was erroneous when submitted or has become erroneous by reason of changed circumstances.

e. The terms "covered transaction," "debarred," "suspended," "ineligible," "participant," "person," "principal," and "voluntarily excluded," as used in this clause, are defined in 2 CFR Parts 180 and 1200. "First Tier Covered Transactions" refers to any covered transaction between a grantee or subgrantee of Federal funds and a participant (such as the prime or general contract). "Lower Tier Covered Transactions" refers to any covered transaction under a First Tier Covered Transaction (such as subcontracts). "First Tier Participant" refers to the participant who has entered into a covered transaction with a grantee or subgrantee of Federal funds (such as the prime or general contractor). "Lower Tier Participant" refers any participant who has entered into a covered transaction with a First Tier Participant or other Lower Tier Participants (such as subcontractors and suppliers).

f. The prospective first tier participant agrees by submitting this proposal that, should the proposed covered transaction be entered into, it shall not knowingly enter into any lower tier covered transaction with a person who is debarred, suspended, declared ineligible, or voluntarily excluded from participation in this covered transaction, unless authorized by the department or agency entering into this transaction.

g. The prospective first tier participant further agrees by submitting this proposal that it will include the clause titled "Certification Regarding Debarment, Suspension, Ineligibility and Voluntary Exclusion-Lower Tier Covered Transactions," provided by the department or contracting agency, entering into this covered transaction, without modification, in all lower tier covered transactions and in all solicitations for lower tier covered transactions exceeding the $25,000 threshold.

h. A participant in a covered transaction may rely upon a certification of a prospective participant in a lower tier covered transaction that is not debarred, suspended, ineligible, or voluntarily excluded from the covered transaction, unless it knows that the certification is erroneous. A participant is responsible for ensuring that its principals are not suspended, debarred, or otherwise ineligible to participate in covered transactions. To verify the eligibility of its principals, as well as the eligibility of any lower tier prospective participants, each participant may, but is not required to, check the Excluded Parties List System website (https://www.epls.gov/), which is compiled by the General Services Administration.

i. Nothing contained in the foregoing shall be construed to require the establishment of a system of records in order to render in good faith the certification required by this clause. The knowledge and information of the prospective participant is not required to exceed that which is normally possessed by a prudent person in the ordinary course of business dealings.

j. Except for transactions authorized under paragraph (f) of these instructions, if a participant in a covered transaction knowingly enters into a lower tier covered transaction with a person who is suspended, debarred, ineligible, or voluntarily excluded from participation in this transaction, in addition to other remedies available to the Federal Government, the department or agency may terminate this transaction for cause or default.

* * * * *

2. Certification Regarding Debarment, Suspension, Ineligibility and Voluntary Exclusion – First Tier Participants:

a. The prospective first tier participant certifies to the best of its knowledge and belief, that it and its principals:

(1) Are not presently debarred, suspended, proposed for debarment, declared ineligible, or voluntarily excluded from participating in covered transactions by any Federal department or agency;

(2) Have not within a three-year period preceding this proposal been convicted of or had a civil judgment rendered against them for commission of fraud or a criminal offense in connection with obtaining, attempting to obtain, or performing a public (Federal, State or local) transaction or contract under a public transaction; violation of Federal or State antitrust statutes or commission of embezzlement, theft, forgery, bribery, falsification or destruction of records, making false statements, or receiving stolen property;

(3) Are not presently indicted for or otherwise criminally or civilly charged by a governmental entity (Federal, State or local) with commission of any of the offenses enumerated in paragraph (a)(2) of this certification; and

(4) Have not within a three-year period preceding this application/proposal had one or more public transactions (Federal, State or local) terminated for cause or default.

b. Where the prospective participant is unable to certify to any of the statements in this certification, such prospective participant shall attach an explanation to this proposal.

2. Instructions for Certification - Lower Tier Participants:

(Applicable to all subcontracts, purchase orders and other lower tier transactions requiring prior FHWA approval or estimated to cost $25,000 or more - 2 CFR Parts 180 and 1200)

a. By signing and submitting this proposal, the prospective lower tier is providing the certification set out below.

b. The certification in this clause is a material representation of fact upon which reliance was placed when this transaction was entered into. If it is later determined that the prospective lower tier participant knowingly rendered an erroneous certification, in addition to other remedies available to the Federal Government, the department, or agency with which this transaction originated may pursue available remedies, including suspension and/or debarment.

c. The prospective lower tier participant shall provide immediate written notice to the person to which this proposal is submitted if at any time the prospective lower tier participant learns that its certification was erroneous by reason of changed circumstances.

d. The terms "covered transaction," "debarred," "suspended," "ineligible," "participant," "person," "principal," and "voluntarily excluded," as used in this clause, are defined in 2 CFR Parts 180 and 1200. You may contact the person to which this proposal is submitted for assistance in obtaining a copy of those regulations. "First Tier Covered Transactions" refers to any covered transaction between a grantee or subgrantee of Federal funds and a participant (such as the prime or general contract). "Lower Tier Covered Transactions" refers to any covered transaction under a First Tier Covered Transaction (such as subcontracts). "First Tier Participant" refers to the participant who has entered into a covered transaction with a grantee or subgrantee of Federal funds (such as the prime or general contractor). "Lower Tier Participant" refers any participant who has entered into a covered transaction with a First Tier Participant or other Lower Tier Participants (such as subcontractors and suppliers).

e. The prospective lower tier participant agrees by submitting this proposal that, should the proposed covered transaction be entered into, it shall not knowingly enter into any lower tier covered transaction with a person who is debarred, suspended, declared ineligible, or voluntarily excluded from participation in this covered transaction, unless authorized by the department or agency with which this transaction originated.

f. The prospective lower tier participant further agrees by submitting this proposal that it will include this clause titled "Certification Regarding Debarment, Suspension, Ineligibility and Voluntary Exclusion-Lower Tier Covered Transaction," without modification, in all lower tier covered transactions and in all solicitations for lower tier covered transactions exceeding the $25,000 threshold.

g. A participant in a covered transaction may rely upon a certification of a prospective participant in a lower tier covered transaction that is not debarred, suspended, ineligible, or voluntarily excluded from the covered transaction, unless it knows that the certification is erroneous. A participant is responsible for ensuring that its principals are not suspended, debarred, or otherwise ineligible to participate in covered transactions. To verify the eligibility of its principals, as well as the eligibility of any lower tier prospective participants, each participant may, but is not required to, check the Excluded Parties List System website (https://www.epls.gov/), which is compiled by the General Services Administration.

h. Nothing contained in the foregoing shall be construed to require establishment of a system of records in order to render in good faith the certification required by this clause. The knowledge and information of participant is not required to exceed that which is normally possessed by a prudent person in the ordinary course of business dealings.

i. Except for transactions authorized under paragraph e of these instructions, if a participant in a covered transaction knowingly enters into a lower tier covered transaction with a person who is suspended, debarred, ineligible, or voluntarily excluded from participation in this transaction, in addition to other remedies available to the Federal Government, the department or agency with which this transaction originated may pursue available remedies, including suspension and/or debarment.

* * * * *

Certification Regarding Debarment, Suspension, Ineligibility and Voluntary Exclusion--Lower Tier Participants:

1. The prospective lower tier participant certifies, by submission of this proposal, that neither it nor its principals is presently debarred, suspended, proposed for debarment, declared ineligible, or voluntarily excluded from participating in covered transactions by any Federal department or agency.

2. Where the prospective lower tier participant is unable to certify to any of the statements in this certification, such prospective participant shall attach an explanation to this proposal.

* * * * *

XI. Certification Regarding Use Of Contract Funds For Lobbying

This provision is applicable to all Federal-aid construction contracts and to all related subcontracts which exceed $100,000 (49 CFR 20).

1. The prospective participant certifies, by signing and submitting this bid or proposal, to the best of his or her knowledge and belief, that:

a. No Federal appropriated funds have been paid or will be paid, by or on behalf of the undersigned, to any person for influencing or attempting to influence an officer or employee of any Federal agency, a Member of Congress, an officer or employee of Congress, or an employee of a Member of Congress in connection with the awarding of any Federal contract, the making of any Federal grant, the making of any Federal loan, the entering into of any cooperative agreement, and the extension, continuation, renewal, amendment, or modification of any Federal contract, grant, loan, or cooperative agreement.

b. If any funds other than Federal appropriated funds have been paid or will be paid to any person for influencing or attempting to influence an officer or employee of any Federal agency, a Member of Congress, an officer or employee of Congress, or an employee of a Member of Congress in connection with this Federal contract, grant, loan, or cooperative agreement, the undersigned shall complete and submit Standard Form-LLL, "Disclosure Form to Report Lobbying," in accordance with its instructions.

2. This certification is a material representation of fact upon which reliance was placed when this transaction was made or entered into. Submission of this certification is a prerequisite for making or entering into this transaction imposed by 31 U.S.C. 1352. Any person who fails to file the required certification shall be subject to a civil penalty of not less than $10,000 and not more than $100,000 for each such failure.

3. The prospective participant also agrees by submitting its bid or proposal that the participant shall require that the language of this certification be included in all lower tier subcontracts, which exceed $100,000 and that all such recipients shall certify and disclose accordingly.

TITLE VI ASSURANCES

During the performance of this Agreement, the contractor, for itself, its assignees and successors in interest (hereinafter collectively referred to as CONTRACTOR) agrees as follows:

(1) Compliance with Regulations: CONTRACTOR shall comply with the regulations relative to nondiscrimination in federally assisted programs of the Department of Transportation, Title 49, Code of Federal Regulations, Part 21, as they may be amended from time to time, (hereinafter referred to as the REGULATIONS), which are herein incorporated by reference and made a part of this agreement.

(2) Nondiscrimination: CONTRACTOR, with regard to the work performed by it during the AGREEMENT, shall not discriminate on the grounds of race, color, sex, national origin, religion, age, or disability in the selection and retention of sub-applicants, including procurements of materials and leases of equipment. CONTRACTOR shall not participate either directly or indirectly in the discrimination prohibited by Section 21.5 of the Regulations, including employment practices when the agreement covers a program set forth in Appendix B of the Regulations.

(3) Solicitations for Sub-agreements, Including Procurements of Materials and Equipment: In all solicitations either by competitive bidding or negotiation made by CONTRACTOR for work to be performed under a Sub-agreement, including procurements of materials or leases of equipment, each potential sub-applicant or supplier shall be notified by CONTRACTOR of the CONTRACTOR'S obligations under this Agreement and the Regulations relative to nondiscrimination on the grounds of race, color, or national origin.

(4) Information and Reports: CONTRACTOR shall provide all information and reports required by the Regulations, or directives issued pursuant thereto, and shall permit access to its books, records, accounts, other sources of information, and its facilities as may be determined by the California Department of Transportation or FHWA to be pertinent to ascertain compliance with such Regulations or directives. Where any information required of CONTRACTOR is in the exclusive possession of another who fails or refuses to furnish this information, CONTRACTOR shall so certify to the California Department of Transportation or the FHWA as appropriate, and shall set forth what efforts CONTRACTOR has made to obtain the information.

(5) Sanctions for Noncompliance: In the event of CONTRACTOR's noncompliance with the nondiscrimination provisions of this agreement, the California Department of Transportation shall impose such agreement sanctions as it or the FHWA may determine to be appropriate, including, but not limited to:

   (a) withholding of payments to CONTRACTOR under the Agreement within a reasonable period of time, not to exceed 90 days; and/or

   (b) cancellation, termination or suspension of the Agreement, in whole or in part.

(6) Incorporation of Provisions: CONTRACTOR shall include the provisions of paragraphs (1) through (6) in every sub-agreement, including procurements of materials and leases of equipment, unless exempt by the Regulations, or directives issued pursuant thereto.

CONTRACTOR shall take such action with respect to any sub-agreement or procurement as the California Department of Transportation or FHWA may direct as a means of enforcing such provisions including sanctions for noncompliance, provided, however, that, in the event CONTRACTOR becomes involved in, or is threatened with, litigation with a sub-applicant or supplier as a result of such direction, CONTRACTOR may request the California Department of Transportation enter into such litigation to protect the interests of the State, and, in addition, CONTRACTOR may request the United States to enter into such litigation to protect the interests of the United States.

Maintain Records and Submit Reports Documenting You Performance Under This Section

E-Contract Review

Approval as to Form

Department Name: Public Works

Vendor Name: TBD

Contract Description: Preventative Bridge Maintenance Bid Packet

Approved as to Form (Approval of Award Contract to be Separately Executed):

By: _____ Date: __8/30/2016__

Brian Briggs, Senior Deputy County Counsel

NOTICE TO BIDDERS

COUNTY OF TEHAMA
DEPARTMENT OF PUBLIC WORKS

Sealed bids for the work shown in the plans and specifications entitled:

BRIDGE PREVENTATIVE MAINTENANCE PROJECT

PLANS AND SPECIAL PROVISIONS

FEDERAL-AID PROJECT NUMBER: BRLS 5908(081)
COUNTY PROJECT NUMBER: 599990A

will be received at the Department of Public Works office at 9380 San Benito Avenue, Gerber, California, 96035 until 3:00PM (PST) on October 12, 2016, at which time they will be publicly opened and read aloud in the conference room at the aforementioned address.

DESCRIPTION OF WORK

Bridge maintenance activities, on 13 structures throughout Tehama County including: cleaning bridge deck surfaces, applying methacrylate polymer sealant, and polyester concrete overlay, removing of asphalt surfacing, replacing joint seals and assemblies, reconstructing approach slabs, and placing pavement markings, and striping.

ENGINEER'S ESTIMATE

The Engineer's Estimate for this contract is $1,700,000.

DISADVANTAGED BUSINESS ENTERPRISE GOAL

The DBE Contract goal is **8%**

TRAINEES OR APPRENTICES

The number of trainees or apprentices for this contract is **-0-**.

CONTRACT TIME

The project has **75** Working Days.

PRE-BID MEETING

A **non-mandatory** pre-bid meeting is scheduled for **October 5, 2016** at 10:00AM at the offices of Tehama County Public Works, 9380 San Benito Ave, Gerber, CA. This meeting is to inform bidders and potential subcontractors of project requirements, arranging solicitations, times for the presentation of bids, quantities, specifications, and delivery schedules in ways that facilitate DBE, and other small businesses participation (e.g., unbundling large contracts to make them more accessible to small businesses, requiring or encouraging prime contractors to subcontract portions of work that they might otherwise perform with their own forces) of subcontracting and material supply opportunities. The County will also answer any questions pertaining to the Plans, Contract, and Specifications including the Alternative bid procedures, if any. Bidder's attendance at this meeting will **non-mandatory**.

BUY AMERICA PROVISIONS

THIS PROJECT IS SUBJECT TO THE "BUY AMERICA" PROVISIONS OF THE SURFACE TRANSPORTATION ASSISTANCE ACT OF 1982 AS AMENDED BY THE INTERMODAL SURFACE TRANSPORTATION EFFICIENCY ACT OF 1991.

Bids are required for the entire work described herein.

CONTRACTOR'S LICENSE CLASSIFICATION

The contractor shall possess either a Class A OR C12 license at the time this contract is awarded. This contract is subject to state contract nondiscrimination and compliance requirements pursuant to Government Code, Section 12990.

Inquiries or questions based on alleged patent ambiguity of the plans, specifications or estimate must be communicated as a bidder inquiry prior to bid opening. Any such inquiries or questions, submitted after bid opening, will not be treated as a bid protest.

OBTAINING OR INSPECTING CONTRACT DOCUMENTS

Bid documents can be examined at area Builder's Exchanges. Documents are available for download on CIP List (www.CIPLIST.com).

Copies are on file and open to public inspection or may be obtained for a NONREFUNDABLE FEE of $50.00 PER SET including ½ size formatted 11x17 paper, (full size individual sheets are available at a cost of $3.50 per sheet) at Tehama County Public Works, 9380 San Benito Avenue, Gerber, CA 96035.

Technical questions should be directed to the office of the County Engineer, Kevin Rosser, Senior Civil Engineer, telephone (530) 385-1462 ex. 3051.

The successful bidder shall furnish a payment bond and a performance bond.

The County of Tehama affirms that in any contract entered into pursuant to this advertisement, disadvantaged business enterprises will be afforded full opportunity to submit bids in response to this invitation.

FEDERAL AND CALIFORNIA PREVAILING WAGE REQUIREMENTS

Federal minimum wage rates are not included in these specifications. They may be obtained at the Internet Web Site http://www.wdol.gov/dba.aspx A copy is also available at the Offices of Tehama County Public Works, 9380 San Benito Avenue, Gerber, CA 96035 If there is a difference between the minimum wage rates predetermined by the Secretary of Labor and the general prevailing wage rates determined by the Director of the California Department of Industrial Relations for similar classifications of labor, the Contractor and subcontractors shall pay not less than the higher wage rate. The Department will not accept lower State wage rates not specifically included in the Federal minimum wage determinations. This includes "helper" (or other classifications based on hours of experience) or any other classification not appearing in the Federal wage determinations. Where Federal wage determinations do not contain the State wage rate determination otherwise available for use by the Contractor and subcontractors, the Contractor and subcontractors shall pay not less than the Federal minimum wage rate, which most closely approximates the duties of the employees in question.

The U.S. Department of Transportation (DOT) provides a toll-free "hotline" service to report bid rigging activities. Bid rigging activities can be reported Mondays through Fridays, between 8:00 a.m. and 5:00 p.m., Eastern Time, Telephone No. 1-800-424-9071. Anyone with knowledge of possible bid rigging, bidder collusion, or other fraudulent activities should use the "hotline" to report these activities. The "hotline" is part of the DOT's continuing effort to identify and investigate highway construction contract fraud and abuse and is operated under the direction of the DOT Inspector General. All information will be treated confidentially and caller anonymity will be respected.

PUBLIC CONTRACT CODE SECTION 22300

Pursuant to Public Contract Code Section 22300, for monies earned by the Contractor and withheld by the County to ensure the performance of the Contract, the Contractor, may, at its option, choose to substitute securities meeting the requirements of said Public Contract Code Section 22300. Such securities shall be valued by the County Treasurer-Tax Collector, whose decision shall be final. Securities not listed under Public Contract Code Section 22300 or Government Code Section 16430 must be pre-qualified by the County Treasurer-Tax Collector before bid opening in order to be accepted by the County as security.

BOARD OF SUPERVISORS; COUNTY OF TEHAMA

BY: Gary B. Antone, Director
Department of Public Works

9-12-16
Date

Advertisement #1 September 22, 2016
Advertisement #2 September 29, 2016

COUNTY OF TEHAMA

DEPARTMENT OF PUBLIC WORKS

CONSTRUCTION PLANS FOR

Bridge Preventative Maintenance Program

FEDERAL AID PROJECT No. BRLS-5908(081)
COUNTY PROJECT NO. 599990

INDEX OF PLANS

PAGE	SHEET	DESCRIPTION
1	T-1	TITLE SHEET AND MAP
2	LQ-1	LOCATIONS AND QUANTITIES
3	G-1	ARAMAYO WAY AT SACRAMENTO RIVER
4	G-2	BEND FERRY ROAD AT SACRAMENTO RIVER
5	G-3	RED BANK ROAD AT RED BANK CREEK
6	G-4	SOUTH AVENUE AT SACRAMENTO RIVER
7	SP-1	STD. PLANS STRIP JOINT SEAL ASSEMBLY

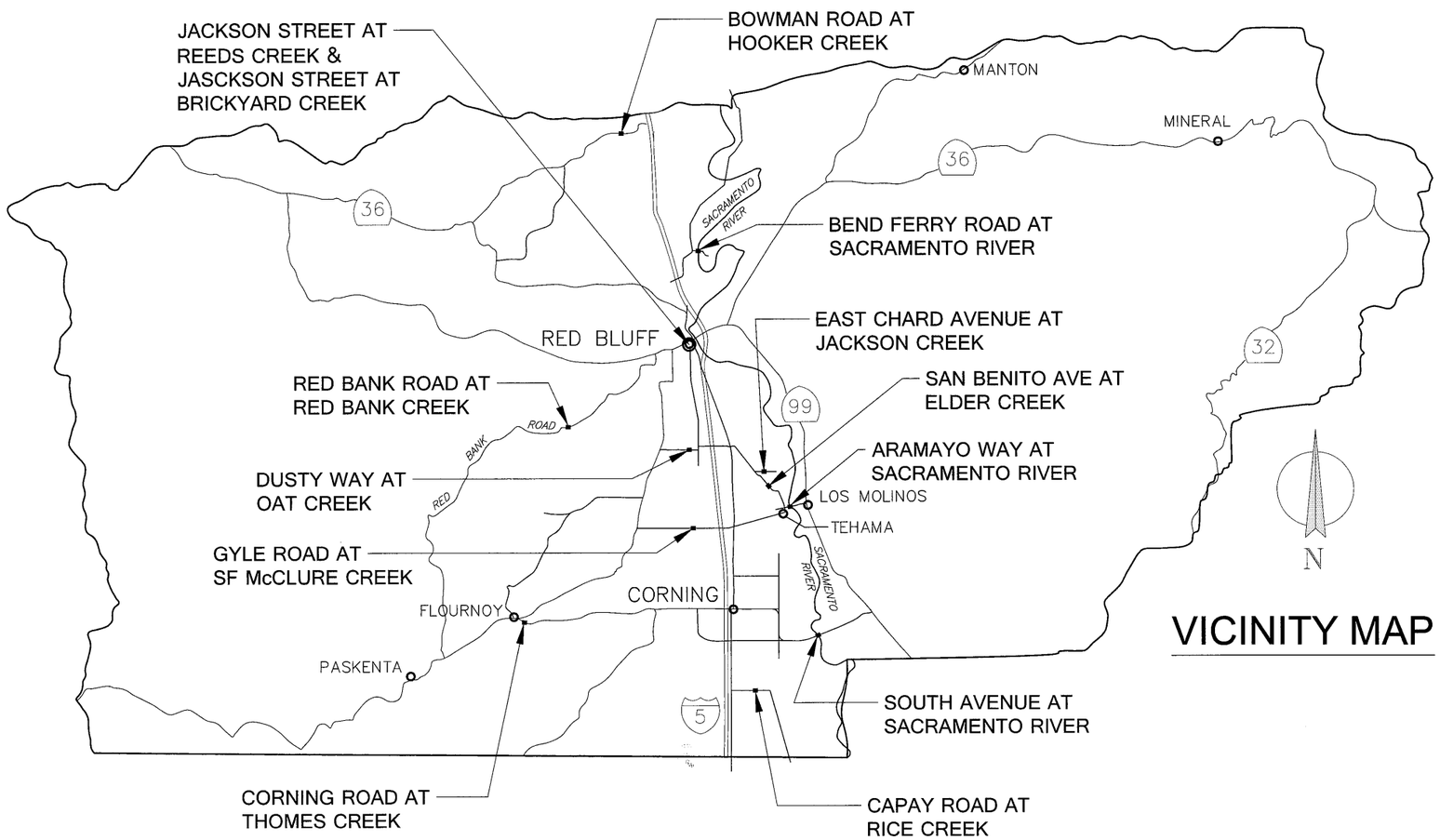

VICINITY MAP

CALL UTILITY NOTIFICATION CENTER OF CALIFORNIA
811
Know what's below.
Call before you dig.
CALL 2 BUSINESS DAYS IN ADVANCE BEFORE YOU DIG, GRADE, OR EXCAVATE FOR THE MARKING OF UNDERGROUND MEMBER UTILITIES.

TEHAMA COUNTY BOARD OF SUPERVISORS

DISTRICT 1 STEVE CHAMBLIN
DISTRICT 2 CANDY CARLSON
DISTRICT 3 DENNIS GARTON
DISTRICT 4 BOB WILLIAMS
DISTRICT 5 BURT BUNDY

APPROVED BY:

CHAIRPERSON BOARD OF SUPERVISORS

BOARD OF SUPERVISORS TEHAMA COUNTY, CA
COUNTY SEAL

TEHAMA COUNTY DEPARTMENT OF PUBLIC WORKS

9-13-16

GARY ANTONE
DIRECTOR OF PUBLIC WORKS

REGISTERED PROFESSIONAL ENGINEER GARY B. ANTONE C 36077 CIVIL STATE OF CALIFORNIA

No.	REVISION:	BY:	DATE:

REGISTERED PROFESSIONAL ENGINEER KEVIN S. ROSSER C 78389 CIVIL STATE OF CALIFORNIA

TEHAMA COUNTY PUBLIC WORKS
9380 San Benito Ave.
Gerber, Ca 96035
(530) 385-1462

SCALE	
HORIZ:	N/A
VERT:	N/A
DRAWN BY:	TAC
DATE:	9/12/2016
CHECKED BY:	KSR
DATE:	9/13/2016

Bridge Preventative Maintenance Program

Title Sheet

PROJECT NO.: 599990

SHEET NO.	PAGE NO.
T-1	1/7

AramayoWay_Snc_BPMP.dwg

			Spans			5	2	2	4	6	6	8	4	6	3	4		
			Width	48	48	33	28	32	34	32	32	26	34	30	18	32		
			Length	210	99	725	30	53	59	425	1000	223	121	836	89	151		
			Sq. Ft	10080	4752	23635	840	1696	2006	13600	32157	5779	4140	24965	1598	4850		
		GENERAL WORK DESCRIPTION		HMWM	HMWM	HMWM, PC, JOINT SEALS	HMWM	HMWM	HMWM	HMWM	HMWM, JOINT SEAL ASSEMBLIES	HMWM	HMWM	HMWM, JOINT SEAL ASSEMBLIES, BEARING PADS	HMWM	REMOVE AC, APPROACH SLABS, HMA, JOINT SEALS		
		BRIDGE LOCATION AND NUMBER		Jackson Street @ Reeds Creek (08C-0055) RB	Jackson Street @ Brickyard Crk (08C-0170) RB	South Avenue @ Sacramento (08C-0006)	East Chard Ave @ Jackson Crk (08C-0028)	Gyle Road @ SF McClure Crk (08C-0143)	Capay Road @ Rice Creek (08C-0160)	Corning Road @ Thomes Creek (08C-0029)	Aramayo Way @ Sacramento River (08C-0002)	San Benito Avenue @ Elder Creek (08C-0056)	Bowman Road @ Hooker Creek (08C-0091)	Bend Ferry @ Sacramento River (08C-0017)	Dusty Way @ Oat Creek (08C-0102)	Red Bank Road @ Red Bank Creek (08C-0067)	Estimated Quantity	
Item No.		Section Referenc	Item Description	Unit														
1		9.E-1	Mobilization	LS													LUMP SUM	
2		12	Traffic Control System	LS													LUMP SUM	
3		12.B-1	Construction Area Signs	LS													LUMP SUM	
4		12.B-2	Portable Changeable Message Sign	LS													LUMP SUM	
5		13.A	Prepare Water Pollution Control Program	LS													LUMP SUM	
6		13.B	Job Site Management	LS													LUMP SUM	
7		13.C	Temporary Concrete Washout	LS													LUMP SUM	
8		15.A	Cold Plane Asphalt Concrete Pavement	SQYD												670	670	
9		15.B	Concrete Removal	CY												12	12	
10		15.C	Bridge Removal (Portion)	EA							2			2			4	
11		15.D-1	Prepare Concrete Bridge Deck Surface	SQFT	10080	4752	23623	840	1696	2006	13600	32157	5779	4140	24965	1598		125,236
12	(F)	15.D-2	Remove Asphalt Concrete Surfacing	SQFT												4850	4,850	
13		15.D-3	Furnish Bridge Deck Treatment Material (Methacrylate)	GAL	112	53	262	9	19	22	151	357	64	46	277	18		1,392
14	(F)	15.D-3	Treat Bridge Deck (Methacrylate)	SQFT	10080	4752	23623	840	1696	2006	13600	32157	5779	4140	24965	1598		125,236
15		15.D-3 / 15.D-4	Public Safety Plan	LS													LUMP SUM	
16	(F)	15.D-4	Furnish Polyester Concrete Overlay	CF			1476										1,476	
17	(F)	15.D-4	Place Polyester Concrete Overlay	SQFT			23623										23,623	
18		37	Slurry Seal	TON												0.6	0.6	
19		39	Hot Mix Asphalt- Type B 1/2" Method	TON												54.5625	55	
20	(F)	51	Structural Concrete-Bridge	CY							9			8			17	
21		51.B	Drill and Bond Dowel	LF										46			46	
22		51.C-2	Joint Seal Type A (MR 1")	LF												180	180	
23		51.C-3	Joint Seal Type B (MR 2")	LF			65										65	
24	(P)	51.C-4	Joint Seal Assembly (MR 4")	LF							72			60			132	
25		51.D	Replace Bearing Pad	EA										2			2	
26		51.E	Structural Concrete, Approach Slab (TYPE R)	LS												1	LUMP SUM	
27	(P)	52	Bar Reinforcing Steel (Bridge)	LB							440			361			801	
28		59	Clean and Paint Structural Steel (Existing Bridge)	LS												1	1	
29		84	Thermoplastic Traffic Stripe	LF	610	499	925	430	453	459	825	1400	623	521	1236	489	551	9,022
30		85	Pavement Marker	EA	50	42	79	36	38	38	68	116	52	44	104	40	46	753

No.	REVISION:	BY:	DATE:

REGISTERED PROFESSIONAL ENGINEER KRISTIN S. HOSSER C 78369 CIVIL STATE OF CALIFORNIA

TEHAMA COUNTY PUBLIC WORKS

9380 San Benito Ave.
Gerber, Ca 96035
(530) 385-1462

COUNTY OF TEHAMA

HORIZ:	N/A
VERT:	N/A
DRAWN BY:	TAC
DATE:	9/12/2016
CHECKED BY:	KSR
DATE:	9/13/2016
SCALE	

Bridge Preventative Maintenance Program

Locations and Quantities

PROJECT NO.: 599990

SHEET NO. LQ-1

PAGE NO. 2/7

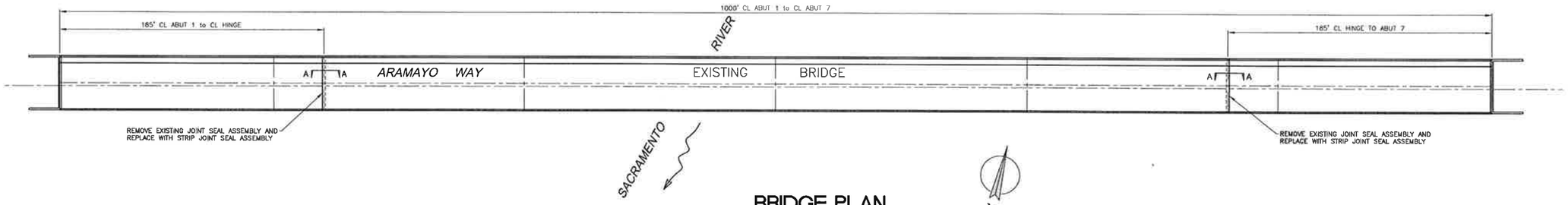

BRIDGE PLAN

SCALE: 1" = 30'

0 30 60

N

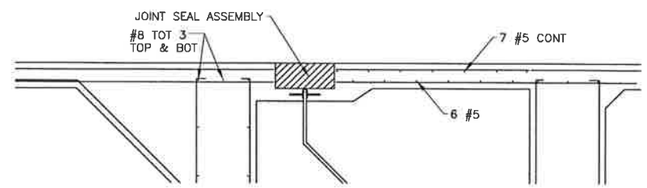

EXISTING SECTION AA

SCALE: 1" = 2'

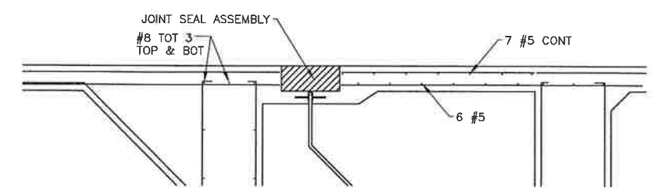

RECONSTRUCTION SECTION AA

SCALE: 1" = 2'

NOTES:

REMOVE EXISTING CONCRETE AND JOINT SEAL ASSEMBLY.

DEPTH TO BE REMOVED DEPENDANT ON REMOVAL OF EXISTING JOINT SEAL ASSEMBLY AND INSTALLATION REQUIREMENTS OF NEW. 10" MIN.

CONTRACTOR MUST REVIEW AS-BUILT PLANS AVAILABLE AS ADDITIONAL INFORMATION.

THE CONTRACTOR MUST VERIFY ALL CONTROLLING FIELD DIMENSIONS BEFORE ORDERING OR FABRICATING ANY MATERIAL.

No.	REVISION:	BY:	DATE:

REGISTERED PROFESSIONAL ENGINEER KEITH S. ROSSER C 78389 CIVIL STATE OF CALIFORNIA

TEHAMA COUNTY PUBLIC WORKS

9380 San Benito Ave.
Gerber, Ca 96035
(530) 385-1462

COUNTY OF TEHAMA

SCALE	
HORIZ:	NOTED
VERT:	NOTED
DRAWN BY:	TAC
DATE:	9/12/2016
CHECKED BY:	KSR
DATE:	9/13/2016

Bridge Preventative Maintenance Program
Sacramento River Bridge @ Aramayo Way
Joint Seal Replacement

PROJECT NO.: 599990

SHEET NO.	PAGE NO.
G-1	3/7

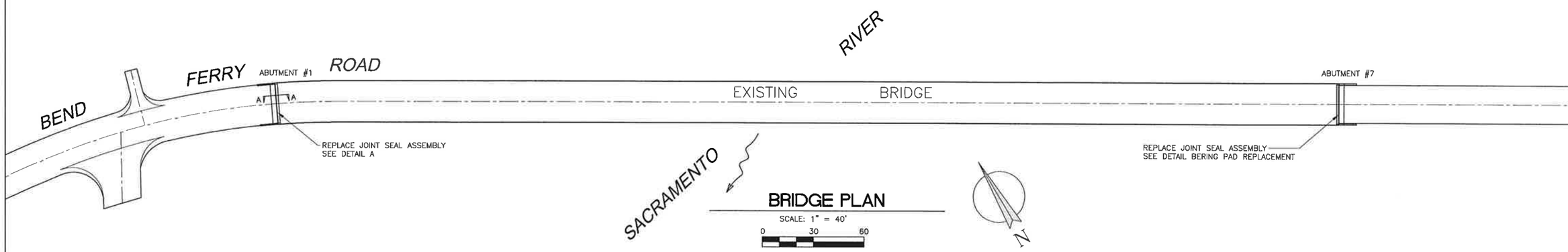

BRIDGE PLAN

SCALE: 1" = 40'

0 30 60

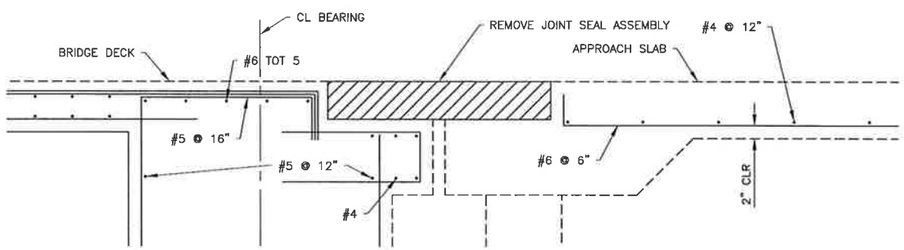

EXISTING SECTION A-A

SCALE: 1" = 2'

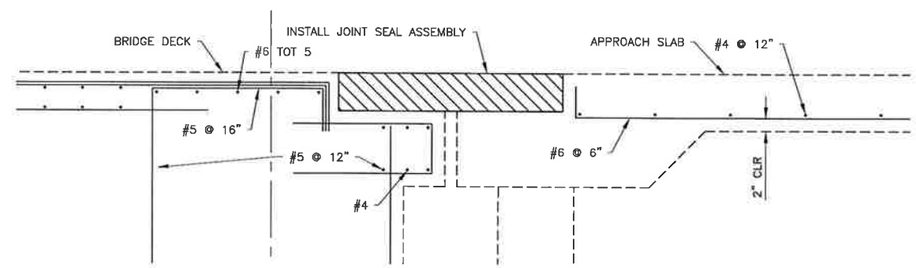

RECONSTRUCTION SECTION A-A

SCALE: 1" = 2'

NOTES:

1. PLACE TAPERED 200:1 (LEADING / TRAILING EDGE = 1/2" THICK MAX) RIDGED PAVEMENT MATERIAL AT APPROACH AND DEPARTURE OF CONSTRUCTION.

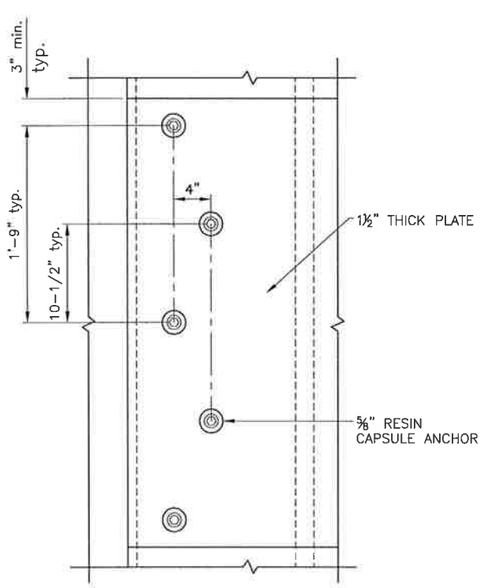

BOLT STAGGER DETAIL

SCALE: 1" = 8"

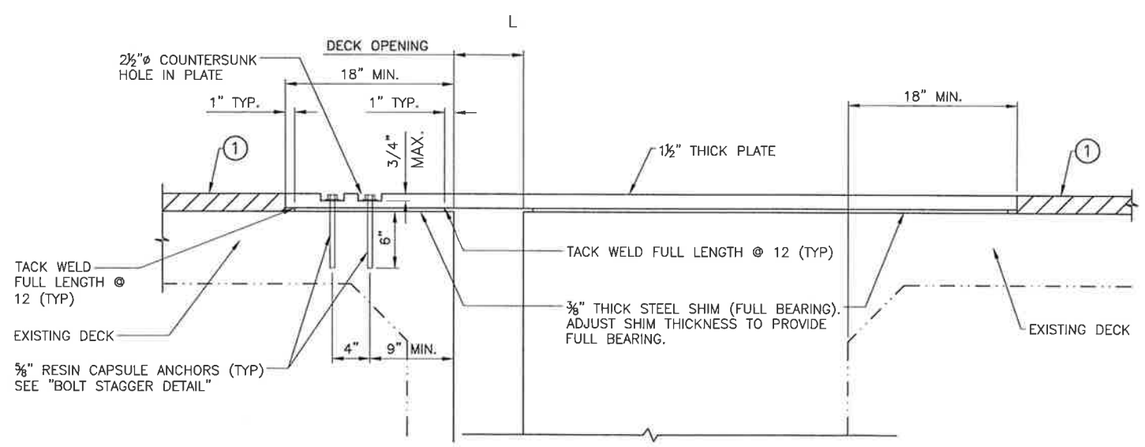

TEMPORARY DECK PLATE CONNECTION

SCALE: 1" = 8"

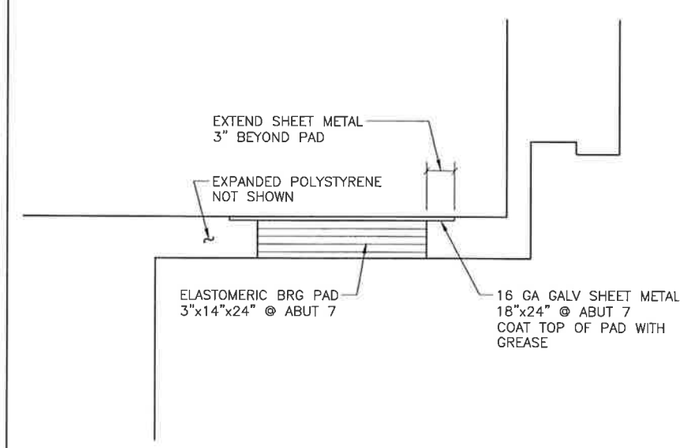

BEARING PAD REPLACEMENT DETAIL

SCALE: 1" = 8"

No.	REVISION:	BY:	DATE:

REGISTERED PROFESSIONAL ENGINEER
KELLIN S. ROSSER
C 78389
CIVIL
STATE OF CALIFORNIA

TEHAMA COUNTY
PUBLIC WORKS

9380 San Benito Ave.
Gerber, Ca 96035
(530) 385-1462

COUNTY OF TEHAMA

SCALE	
HORIZ:	NOTED
VERT:	1" = 5'
DRAWN BY:	TAC
DATE:	9/12/2016
CHECKED BY:	KSR
DATE:	9/13/2016

Bridge Preventative Maintenance Program
Sacramento River Bridge @ Bend Ferry Road
Joint Seal Replacement

PROJECT NO.: 599990

SHEET NO.	PAGE NO.
G-2	4/7

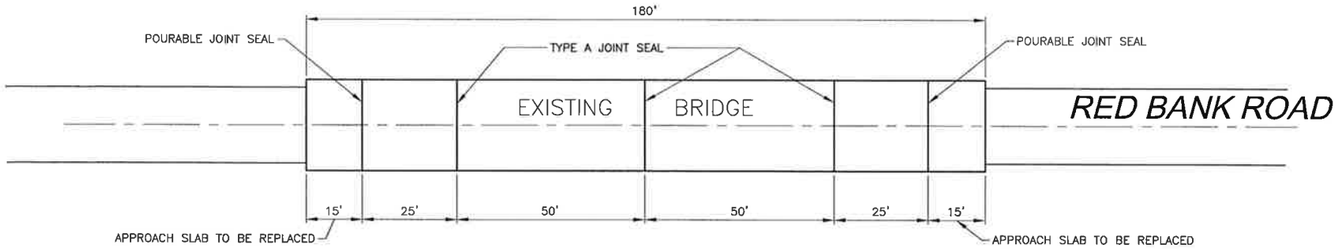

BRIDGE PLAN

SCALE: 1" = 20'

0 20 40

KEYNOTES

1.) INSTALL TYPE A JOINT SEAL, SEE STD. PLAN B6-21

2.) INSTALL POURABLE JOINT SEAL, SEE DETAIL ATTACHED (2)

3.) REMOVE EXISTING CONCRETE APPROACH SLAB AND REPLACE WITH NEW MODIFIED TYPE B APPROACH SLAB, SEE DETAIL ATTACHED (3)

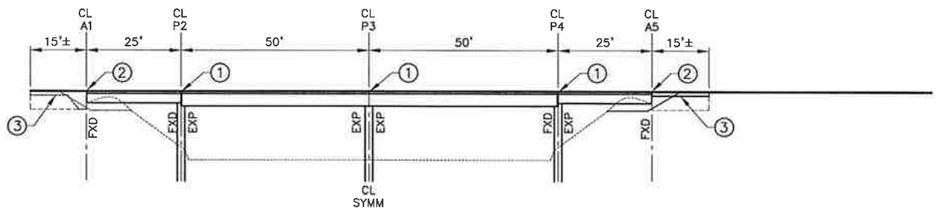

BRIDGE ELEV.

SCALE: 1" = 20'

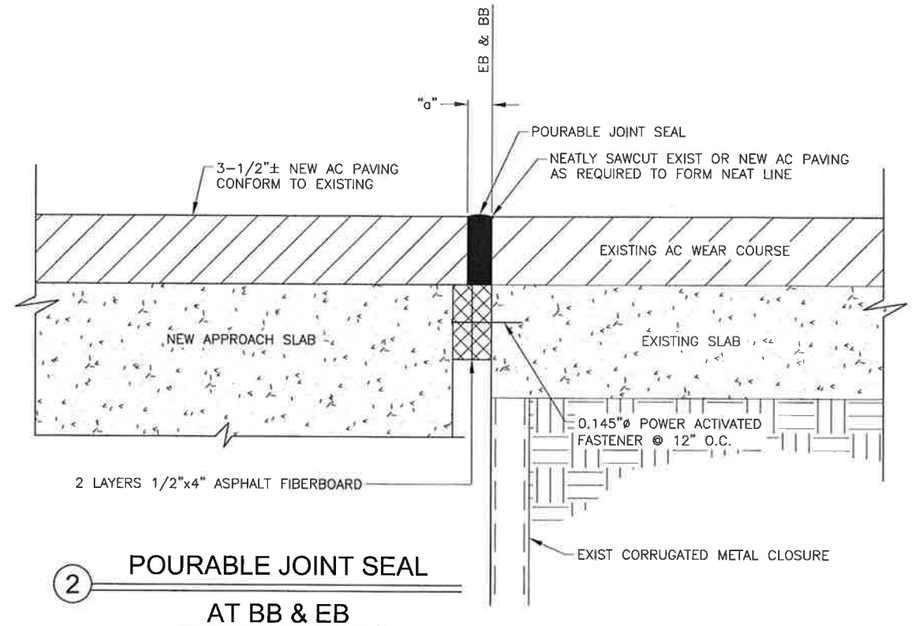

(2) POURABLE JOINT SEAL AT BB & EB

SCALE: 1" = 4"

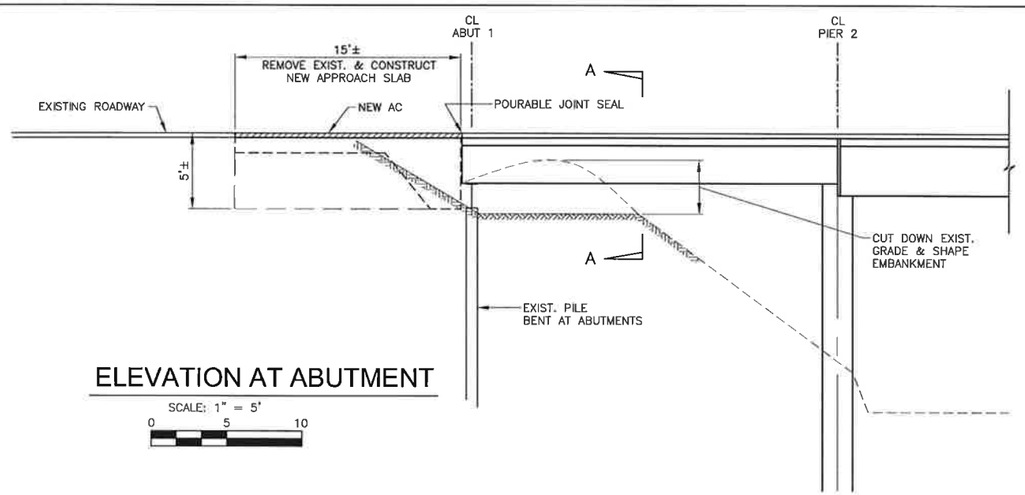

ELEVATION AT ABUTMENT

SCALE: 1" = 5'

0 5 10

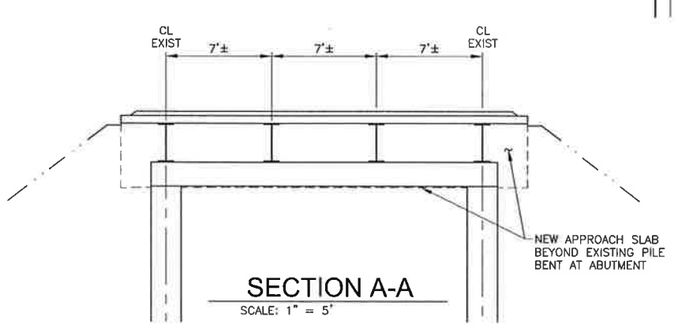

SECTION A-A

SCALE: 1" = 5'

(3) APPROACH SLAB REPLACEMENT DETAIL

No.	REVISION:	BY:	DATE:

REGISTERED PROFESSIONAL ENGINEER KEITH S. ROSSER C 78389 CIVIL STATE OF CALIFORNIA

TEHAMA COUNTY PUBLIC WORKS

9380 San Benito Ave.
Gerber, Ca 96035
(530) 365-1462

COUNTY OF TEHAMA

SCALE	
HORIZ:	NOTED
VERT:	N/A
DRAWN BY:	TAC
DATE:	9/12/2016
CHECKED BY:	KSR
DATE:	9/13/2016

Bridge Preventative Maintenance Program
Red Bank Road Bridge @ Red Bank Creek
Joint Seal Replacement

PROJECT NO.: 599990

SHEET NO.	PAGE NO.
G-3	5/7

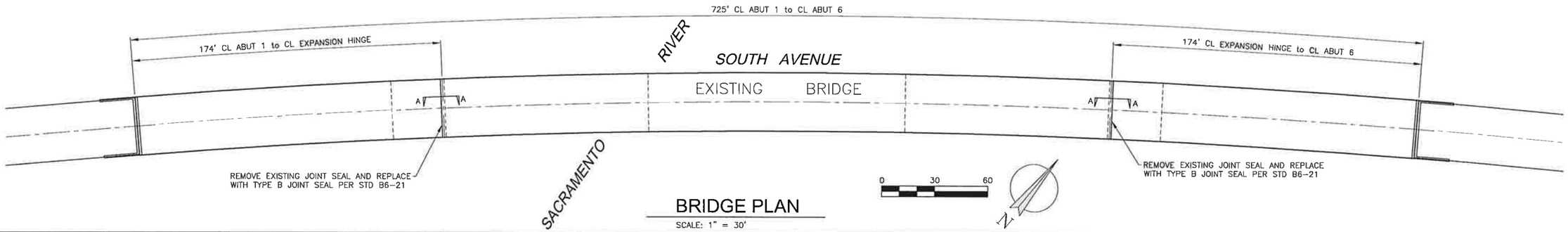

BRIDGE PLAN

SCALE: 1" = 30'

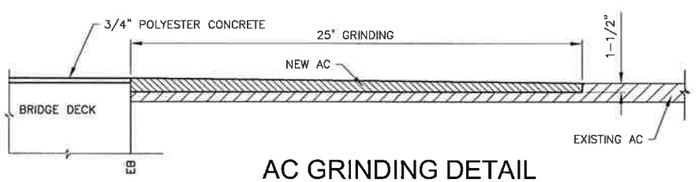

AC GRINDING DETAIL

SCALE: 1" = 1'

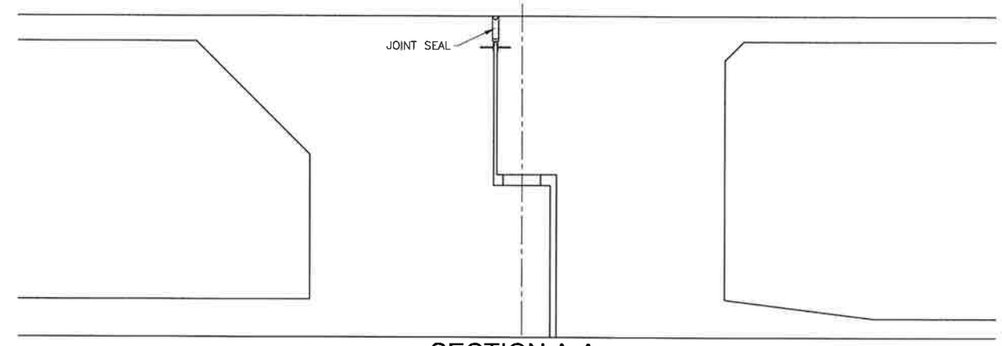

SECTION A-A

SCALE: 1" = 2'

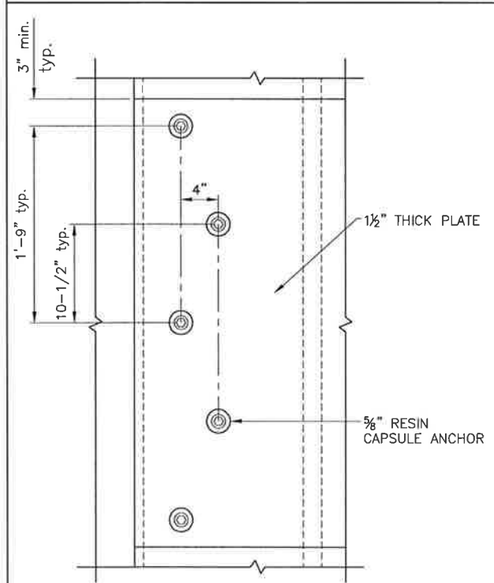

BOLT STAGGER DETAIL

SCALE: 1" = 8"

NOTES:

1. PLACE TAPERED 200:1 (LEADING / TRAILING EDGE = 1/2" THICK MAX) RIDGED PAVEMENT MATERIAL AT APPROACH AND DEPARTURE OF CONSTRUCTION.

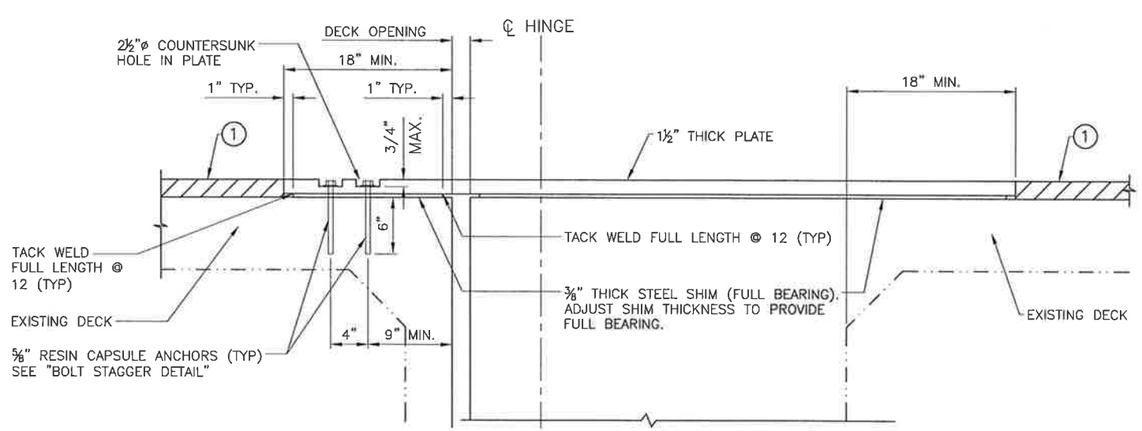

TEMPORARY DECK PLATE CONNECTION

SCALE: 1" = 8"

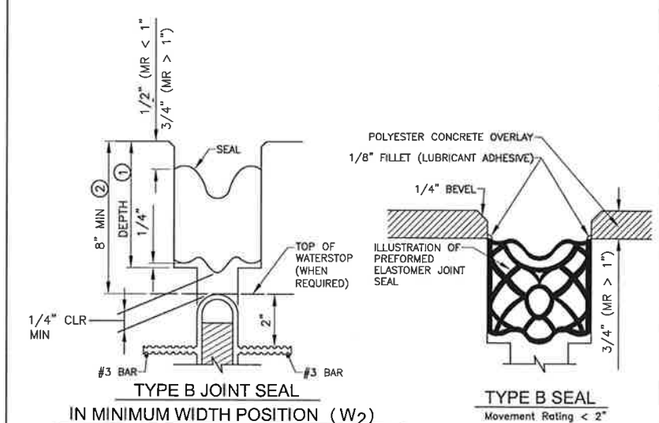

TYPE B JOINT SEAL IN MINIMUM WIDTH POSITION (W_2)

TYPE B SEAL
Movement Rating < 2"

STD. PLAN B6-21

SCALE: 1" = 4"

NOTES:

1. DEPTH OF SAWCUT: DEPTH TO BE EQUAL TO OR GREATER THAN THE DEPTH OF SEAL MEASURED ALONG THE CONTACT SURFACE, WHEN COMPRESSED TO MINIMUM WIDTH POSITION (W_2) PLUS DIMENSION SHOWN
2. OTHER DEPTHS MUST BE APPROVED BY ENGINEER.

No.	REVISION:	BY:	DATE:

REGISTERED PROFESSIONAL ENGINEER KEITH S. ROSSER C 78388 CIVIL STATE OF CALIFORNIA

TEHAMA COUNTY PUBLIC WORKS
9380 San Benito Ave.
Gerber, Ca 96035
(530) 385-1462

COUNTY OF TEHAMA

SCALE		
HORIZ: NOTED	VERT: N/A	
DRAWN BY: TAC	DATE: 9/12/2016	
CHECKED BY: KSR	DATE: 9/13/2016	

Bridge Preventative Maintenance Program
Sacramento River Bridge @ South Avenue
Joint Seal Replacement

PROJECT NO.: 599990

SHEET NO. G-4 PAGE NO. 6/7

DIST	COUNTY	ROUTE	POST MILES TOTAL PROJECT	SHEET No.	TOTAL SHEETS
2	TEH	CR	X	7	7

REGISTERED CIVIL ENGINEER Kevin Rosser 9.12.16 DATE

9.13.16 PLANS APPROVAL DATE

REGISTERED PROFESSIONAL ENGINEER KEVIN ROSSER No. 78389 CIVIL STATE OF CALIFORNIA

The State of California or its officers or agents shall not be responsible for the accuracy or completeness of electronic copies of this plan sheet.

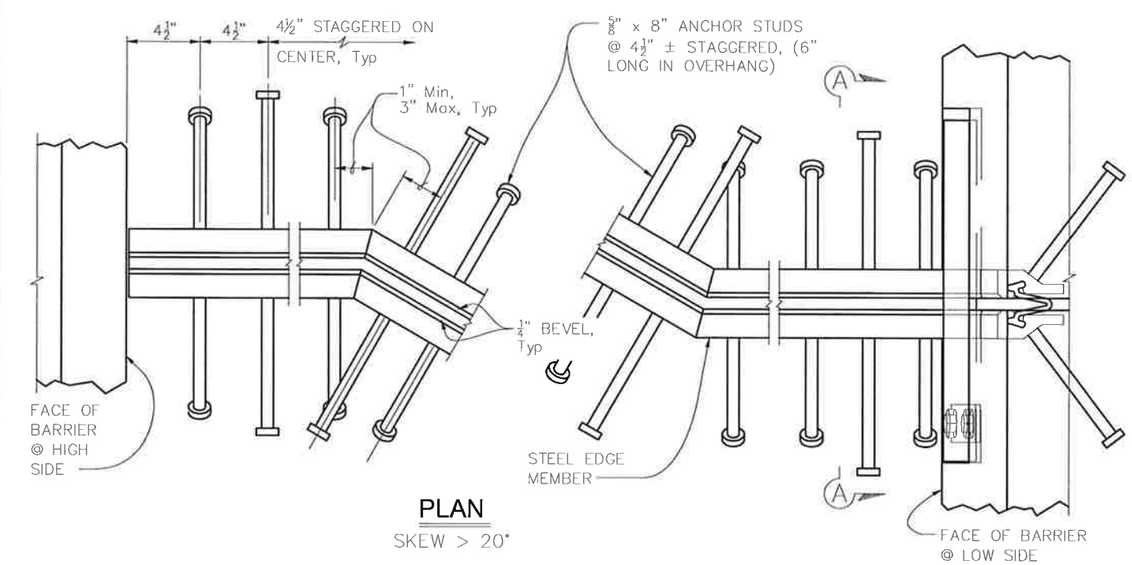

PLAN
SKEW > 20°

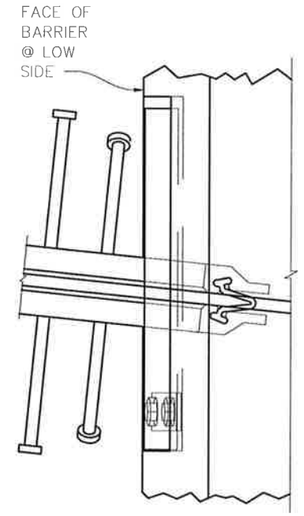

PLAN
SKEW ≤ 20°

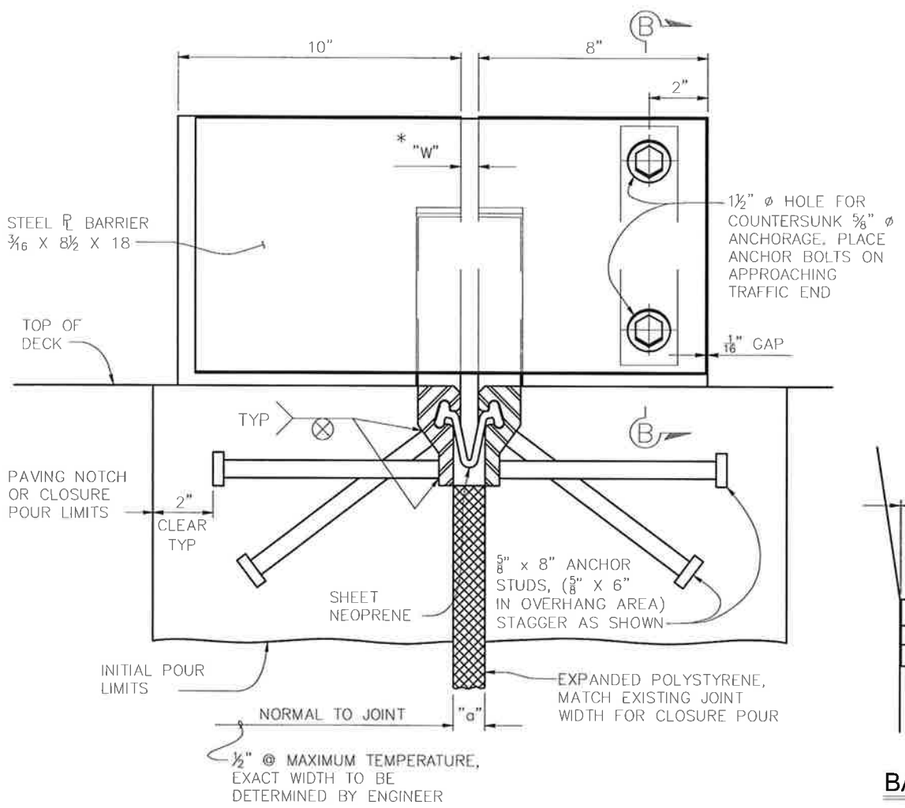

SECTION A-A

JOINT INFORMATION			"a" DIMENSIONS		
BRIDGE NO.	MOVEMENT RATING (MR)	SKEW	WINTER	SPRING & FALL	SUMMER
08C0002	3.5"	0°	TBD	TBD	TBD
08C0017	3.5"	0°	TBD	TBD	TBD

* TO SET MINIMUM JOINT OPENING "W"

$$"W" = \begin{cases} \frac{1}{2}" + [(\text{Max Str temperature in °F}) - (\text{actual Str temperature in °F})] * (a_c \text{ or } a_s)(12)(\text{contributory L in feet}) \\ \frac{1}{2}" \text{ Minimum} \\ a_c = 0.0000060 \\ a_s = 0.0000065 \end{cases}$$

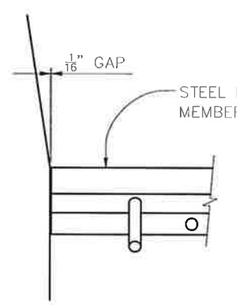

BARRIER DETAIL
HIGH SIDE

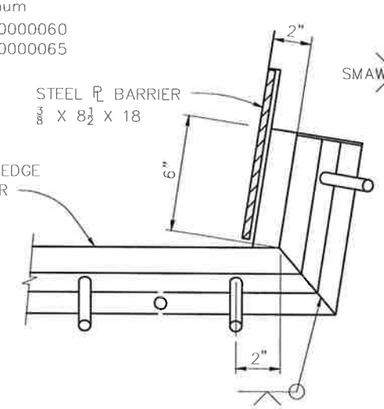

BARRIER DETAIL
LOW SIDE

SCHEMATIC STEEL EDGE MEMBER

NOTES:

1. Alternatively, fillet or complete penetration welds may be used at anchor studs.
2. Alternate types of anchor studs may be permitted subject to the authorization by the Engineer.
3. Joint seal assembly to be used in conjunction with closure pour. (See other sheets for limits). Closure pour shall not be placed until final deck surface is within the tolerances specified.
4. Use joint at crown of roadway, at any change in traverse slope in deck and at changes in horizontal direction. Place other joints at or near lanes. All metal parts to be painted or galvanized after fabrication.
5. Sheet Neoprene shall be fabricated in one continuous piece and shall be fabricated to bend around corners. Field splices of the neoprene are not allowed.
6. Insert assembly or expansion anchorage for ⅝" x 1¾" bolts. Use installation bolts extended ½" minimum past nut and coat with bond breaker, after concrete has cured, remove installation bolts, install HS bolts and sheet neoprene.
7. Sidewalk Detail similar to Barrier Detail on low side at both sides if the roadway is crowned or if the difference in elevation between the ends of the seal is 0.5' or less.
8. a_c, a_s, are the thermal expansion coefficients for concrete and steel respectively.
9. Anchor studs shall conform to ASTM 108.

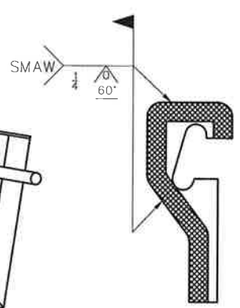

SCHEMATIC FIELD WELD DETAIL

NOTE:
SHADED AREAS TO BE WELDED

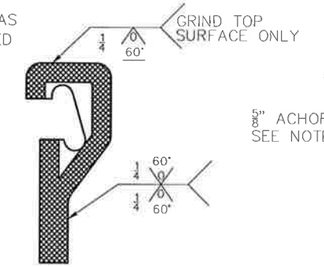

SCHEMATIC SHOP WELD DETAIL

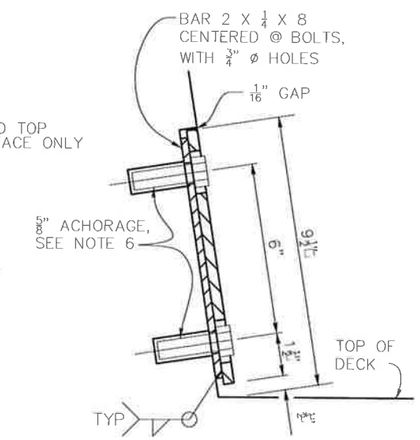

SECTION B-B

NO SCALE

STANDARD DRAWING					
FILE NO. xs8-010	APPROVAL DATE July 2014	STATE OF CALIFORNIA DEPARTMENT OF TRANSPORTATION	DIVISION OF ENGINEERING SERVICES	POST MILE	SP-7 STRIP JOINT SEAL ASSEMBLY MAXIMUM MOVEMENT RATING = 4"

DS OSD 2147A (ENGLISH STANDARD DRAWING "XS" BORDER REV. (02-02-11))

ORIGINAL SCALE IN INCHES FOR REDUCED PLANS 0 1 2 3

UNIT:
PROJECT NUMBER & PHASE: 599990
CONTRACT NO.: 599990

DISREGARD PRINTS BEARING EARLIER REVISION DATES

REVISION DATES

SHEET 7 OF 7