CHAPTER 9

STANDARD

DRAWINGS

CHAPTER 9 – STANDARD DRAWINGS

TABLE OF CONTENTS

DESCRIPTION **DRAWING NO.**

TYPICAL STREET SECTIONS
- Urban Arterial 0901
- Urban Collector 0902
- Suburban/Rural – Major/Arterial 0903
- Suburban/Rural – Collector 0904
- Suburban/Rural – Collector/Local 0905
- Private Cul-De-Sac 0906
- Private Roads Designated Agriculture 0907
- Temporary Cul-De-Sac 0908
- Permanent Cul-De-Sac 0909
- Offset Cul-De-Sac 0910

Connection for Collector Public Road 0911
Connection for Local Public Road 0912
Cross Slope Definition 0913
Driveway Sections 0914
Vertical Curves for Private Driveways 0915
Driveway Encroachment with Culvert 0916
Private Driveway Encroachment 0917
Turnaround Alternates for Private Roadways 0918
Fire Standard Turnaround Alternates for Private Driveway over 200’ in Length 0919
Slope Setback 0920
Street Sign Suburban Area 0921
Street Sign Suburban Area with Stop Sign 0922
Street Sign Urban Area 0923
Street Barricade 0924
Sections for Vertical & Rolled Curb, Gutter & Sidewalk 0925
Transition Sections for Vertical & Rolled Curb, Gutter & Sidewalk 0926
Curb Return and Cross Gutter 0927
Standard Concrete Driveway Approach 0928

DESCRIPTION **DRAWING NO.**

Curb Opening Catch Basin No. 1 0929
Face Angle Anchor Details.....0929a
Curb Opening Catch Basin No. 2 0930
Curb Opening Catch Basin No. 3 0931
Grated Curb Opening Catch Basin No. 4 0932
Grated Detail 0933
Concrete Trench Cover for Streets & Sidewalks 0934
Manhole & Cleanout for Pipe Sizes 6” – 24” 0935
Sewer House Connections.....0936
Sewer Lateral Cleanout.....0937
Manhole-Valve Box Adjustment to Finished Grade.....0938
Manhole Adjustment & Anchorage Details 0939
Standard Inside Drop Manhole.....0940
Oil & Grease or Sand & Oil Interceptor 0941
Oil & Grease (OGI) Interceptor Sizing.....0941a
Sand & Oil (SOI) Interceptor Sizing.....0941c
OGI or SOI Interceptor Monitoring Station 0942
Water Service Connection Single/Double 3/4” – 2” 0943
Water Service Connection Single/Double 3/4” – 2” (3 Services or More) 0944
Water Service Connection Meter & Bypass Detail 3” Services & Larger.....0945
Dry Barrel Fire Hydrant 0946
Fire Hydrant Turnout 0946a
Fire Hydrant Standard Barrier 0946b
Hydrant Marker Location 0946c
Locating Wire Warning Tape.....0947
Thrust Block Details 0948
Thrust Block Tables.....0949
Water Valve Details Paved & Unpaved Surfaces.....0950
Roadway Air Valve Assemble 0951
Water Service Details for Pressure Vacuum Breaker Air Gap Separation 0952
Blowoff Installation 0953
Double Check Valve & Reduced Pressure Principle Devices 0954
Backflow Device Enclosure (3/4” – 2”) 0955

DESCRIPTION **DRAWING NO.**

Backflow Device Enclosure (3” – 8”) 0955a
Bacteriological Sample Station Installation.....0956
Bacteriological Sample Station Enclosure.....0957
Utility Locations 0958
Utility Trench Details (Types A, B & C) 0959
Ground Water Monitoring Well 0960
Survey Monuments 0961
Flood Gate Fencing.....0962
Individual Mailbox Installation.....0963
Title Block and Border 0964

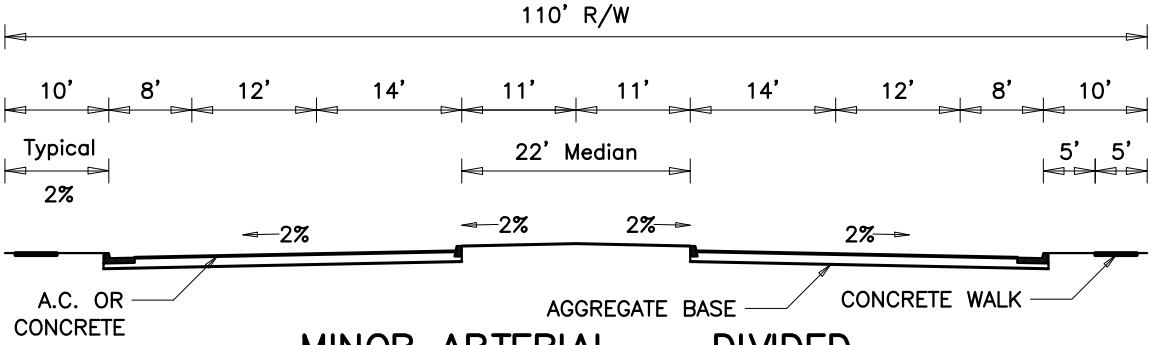

MINOR ARTERIAL – DIVIDED

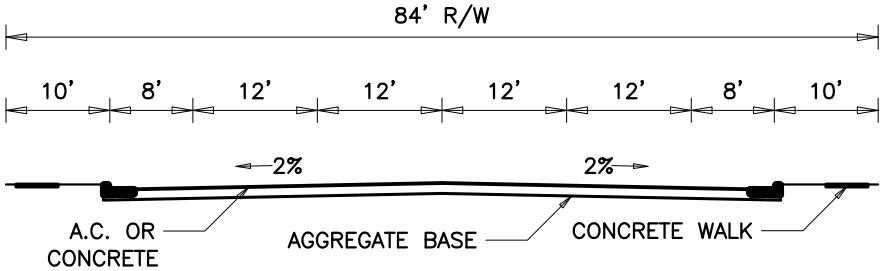

MINOR ARTERIAL

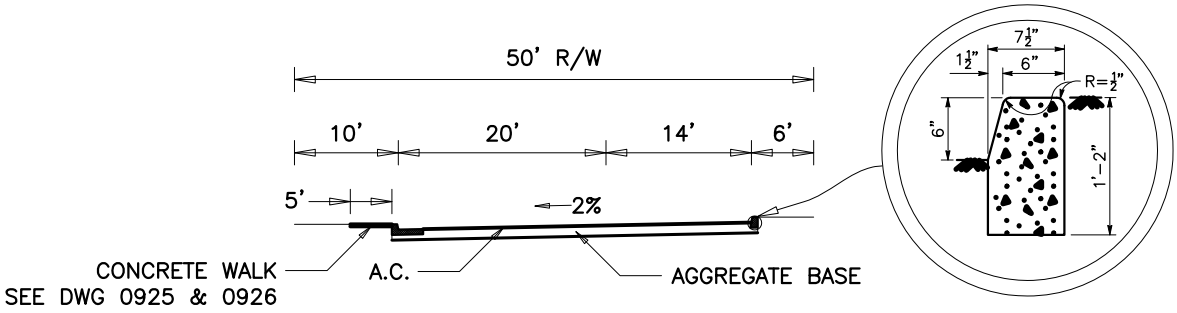

SECONDARY FRONTAGE STREET

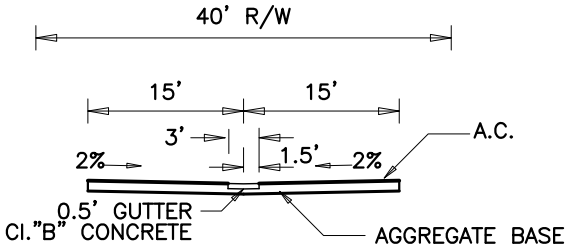

STANDARD ALLEY

NOTE:

1. AGGREGATE BASE – THICKNESS REQUIRED BY "R" VALUE TESTS.
2. USE DRAWING NO. 0903 FOR INDUSTRIAL USES IN RURAL AREAS IF AUTHORIZED BY THE DIRECTOR OF PUBLIC WORKS.

NOT TO SCALE

Public Works Director

TEHAMA COUNTY STANDARD PLANS

REV. NO.	DATE:	BY	TYPICAL STREET SECTIONS FOR URBAN ARTERIAL	DATE 1/07
				DWG. NO. 0901

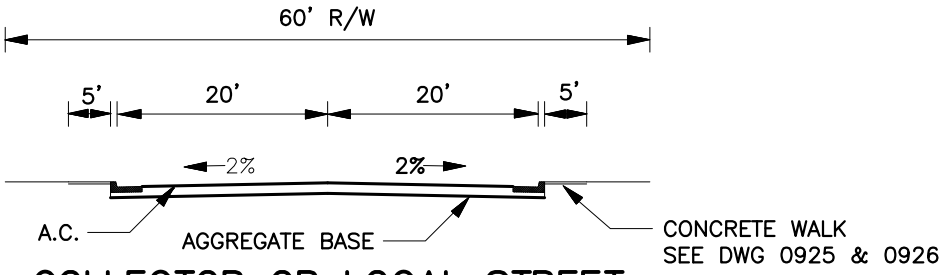

COLLECTOR OR LOCAL STREET

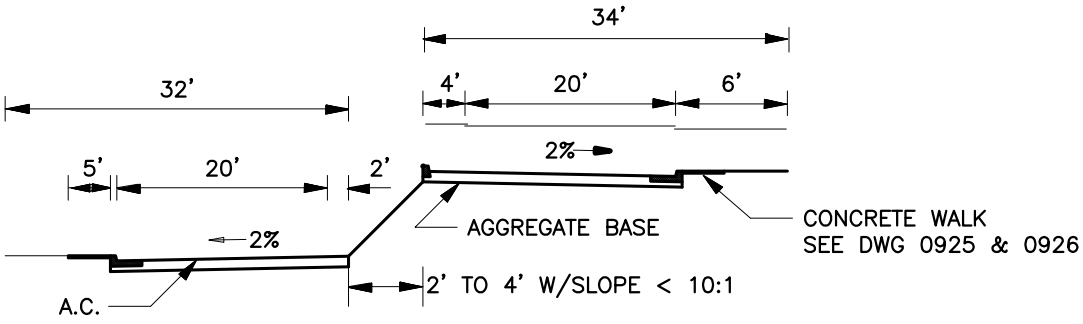

COLLECTOR OR LOCAL SPLIT LEVEL STREET

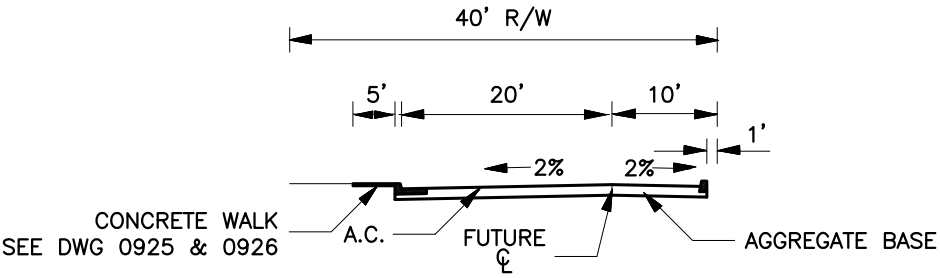

COLLECTOR OR LOCAL HALF WIDTH STREET

NOTE:

1. AGGREGATE BASE – THICKNESS REQUIRED BY "R" VALUE TESTS.
2. USE DRAWING NO. 0903 FOR INDUSTRIAL USES IN RURAL AREAS IF AUTHORIZED BY THE DIRECTOR OF PUBLIC WORKS.

NOT TO SCALE

Public Works Director

TEHAMA COUNTY STANDARD PLANS

REV. NO.	DATE:	BY		DATE
			TYPICAL STREET SECTIONS FOR URBAN COLLECTOR	01/07
				DWG. NO.
				0902

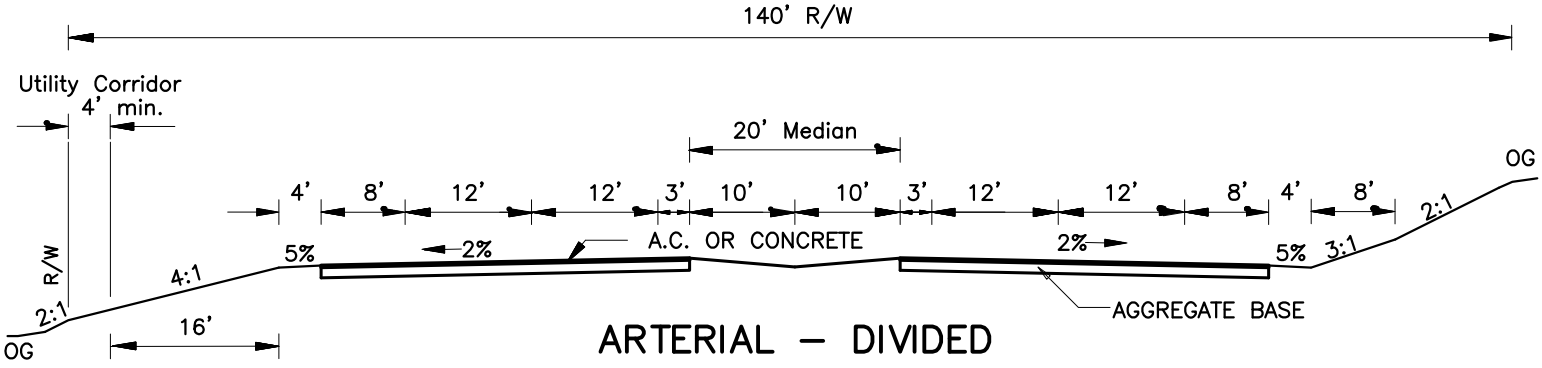

ARTERIAL – DIVIDED

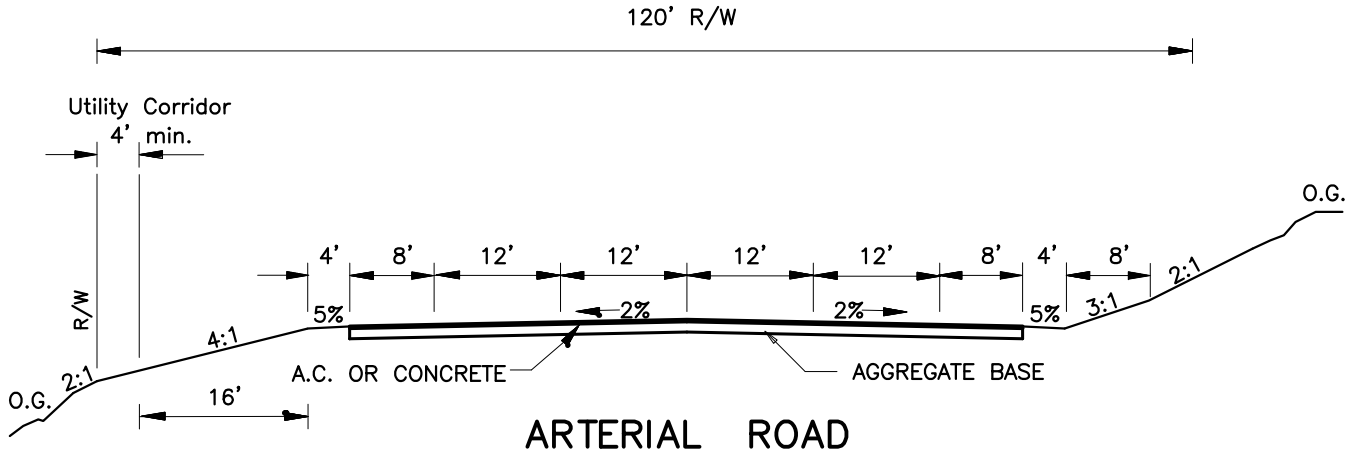

ARTERIAL ROAD

NOTE:

1. AGGREGATE BASE – THICKNESS REQUIRED BY "R" VALUE TESTS.
2. SEE CHAPTER 2 FOR ROAD SECTION REQUIREMENTS.
3. COLLECTOR ROAD SECTION OR A MODIFICATION THEREOF MAY BE USED FOR RURAL INDUSTRIAL USES IF APPROVED BY THE DIRECTOR OF PUBLIC WORKS.

Public Works Director

NOT TO SCALE

TEHAMA COUNTY STANDARD PLANS

REV. NO.	DATE:	BY	TYPICAL ROAD SECTIONS FOR SUBURBAN/ RURAL – MAJOR/ ARTERIAL	DATE 1/07
				DWG. NO. 0903

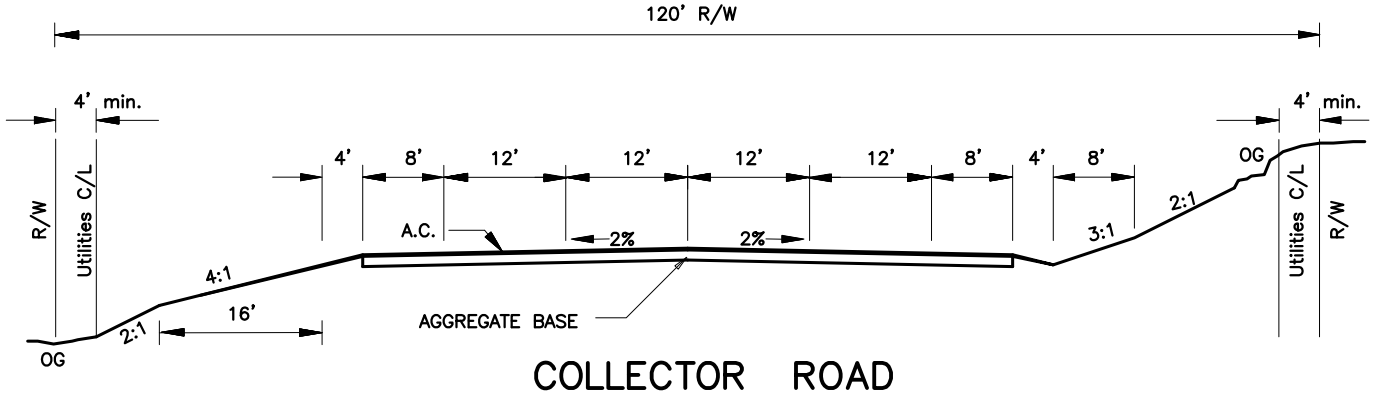

COLLECTOR ROAD
ADT >12,000

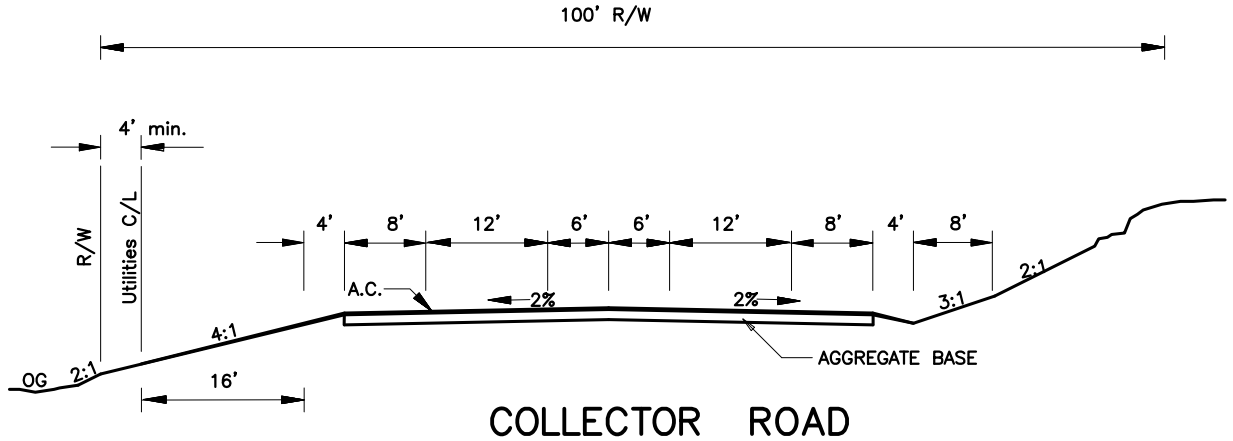

COLLECTOR ROAD
ADT 6,000–12,000

NOTE:

1. AGGREGATE BASE – THICKNESS REQUIRED BY "R" VALUE TESTS.
2. SEE CHAPTER 2 FOR ROAD SECTION REQUIREMENTS.
3. COLLECTOR ROAD SECTION OR A MODIFICATION THEREOF MAY BE USED FOR RURAL INDUSTRIAL USES IF APPROVED BY THE DIRECTOR OF PUBLIC WORKS.

NOT TO SCALE

Public Works Director

TEHAMA COUNTY STANDARD PLANS

REV. NO.	DATE:	BY	TYPICAL ROAD SECTIONS FOR SUBURBAN / RURAL – COLLECTOR	DATE 1/07
				DWG. NO. 0904

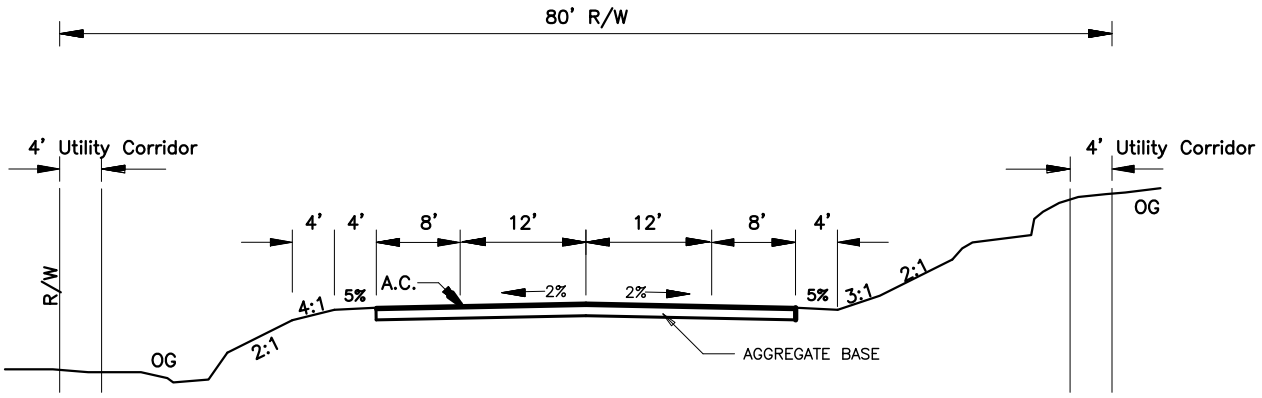

COLLECTOR ROAD ADT 2,000–6,000

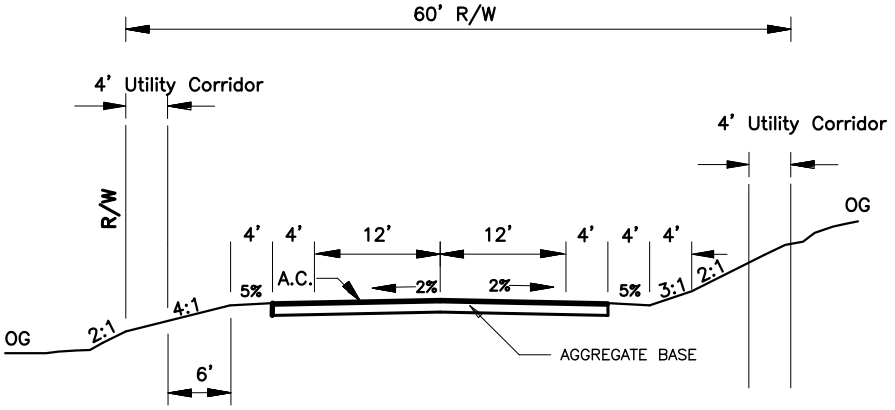

LOCAL ROAD ADT 400–2,000

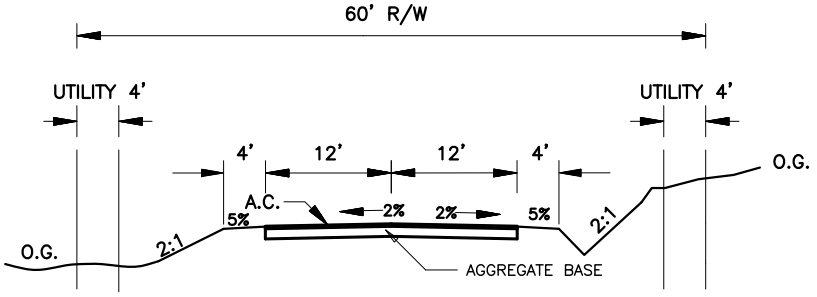

MINOR LOCAL ROAD ADT < 400

NOTE:

1. AGGREGATE BASE – THICKNESS REQUIRED BY "R" VALUE TESTS.
2. SEE CHAPTER 2 FOR ROAD SECTION REQUIREMENTS.
3. COLLECTOR ROAD SECTION OR A MODIFICATION THEREOF MAY BE USED FOR RURAL INDUSTRIAL USES IF APPROVED BY THE DIRECTOR OF PUBLIC WORKS.

NOT TO SCALE

Public Works Director

TEHAMA COUNTY STANDARD PLANS

REV. NO.	DATE:	BY	TYPICAL ROAD SECTIONS FOR SUBURBAN / RURAL – COLLECTOR / LOCAL	DATE 1/07
				DWG. NO. 0905

TYPICAL SECTION

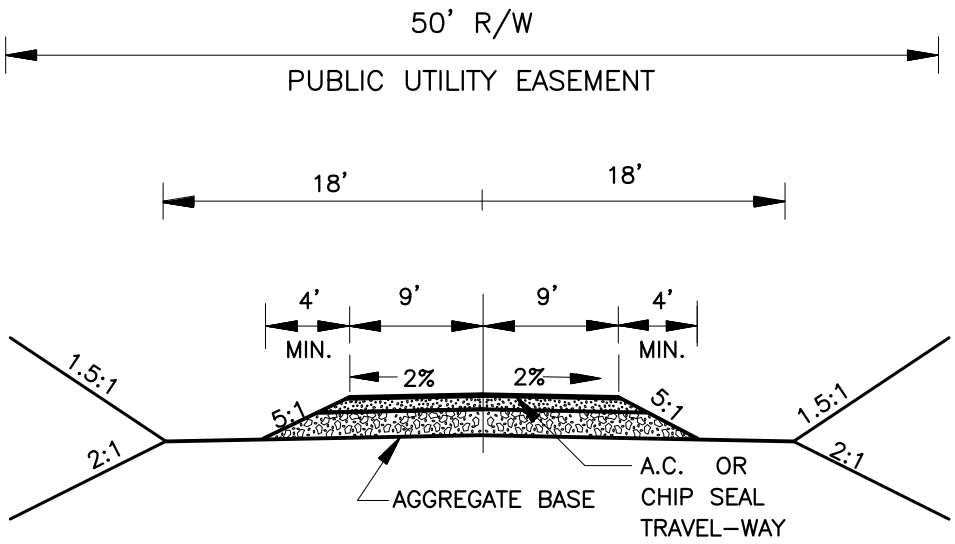

PRIVATE CUL-DE-SAC ROADS

SERVING 4 OR LESS SINGLE FAMILY RESIDENTIAL

NOTES;

1. THIS TYPICAL APPLIES ONLY TO PRIVATE CUL-DE-SAC ROADWAY WHERE THE TOTAL NUMBER OF PARCELS SERVED BY THE ROAD SHALL NOT EXCEED FOUR
2. PROFILE GRADE SHALL NOT EXCEED 15%
3. CERTIFICATION OF MATERIALS COMPLIANCE SHALL BE SUBMITTED TO THE COUNTY ENGINEER
4. PROJECT ENGINEER SHALL PROVIDE WRITTEN CERTIFICATION THAT ROADWAY IS CONSTRUCTED IN ACCORDANCE WITH THESE STANDARDS.
5. UPON WRITTEN NOTICE OF COMPLETION THE COUNTY ENGINEER SHALL MAKE A FINAL INSPECTION OF THE ROAD.
6. COUNTY WILL ASSUME NO RESPONSIBILITY FOR MAINTENANCE OF PRIVATE ROADS
7. CUL-DE-SAC BULBS SHALL HAVE A MINIMUM 40' SURFACE TURNING RADIUS.
8. AGGREGATE BASE – THICKNESS REQUIRED BY "R" VALUE TESTS.

NOT TO SCALE

Public Works Director

TEHAMA COUNTY STANDARD PLANS

REV. NO.	DATE:	BY		DATE 1/07
			TYPICAL ROAD SECTION FOR PRIVATE CUL-DE-SAC	DWG. NO. 0906

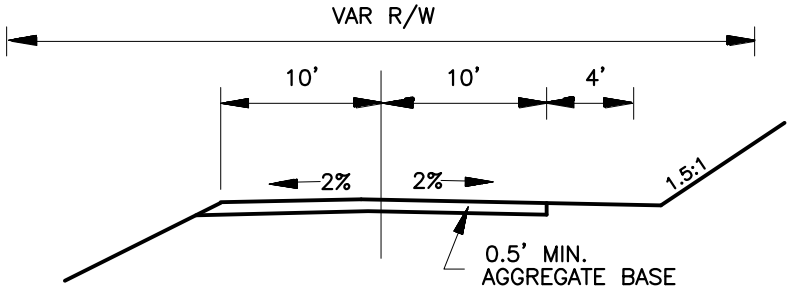

PRIVATE ROADS

SERVING 10 OR LESS PARCELS

20 ACRES OR LARGER

NOT TO SCALE

Public Works Director

TEHAMA COUNTY STANDARD PLANS

REV. NO.	DATE:	BY		DATE 1/07
			TYPICAL PRIVATE ROAD SECTION FOR PRIVATE ROADS DESIGNATED AGRICULTURE	DWG. NO. 0907

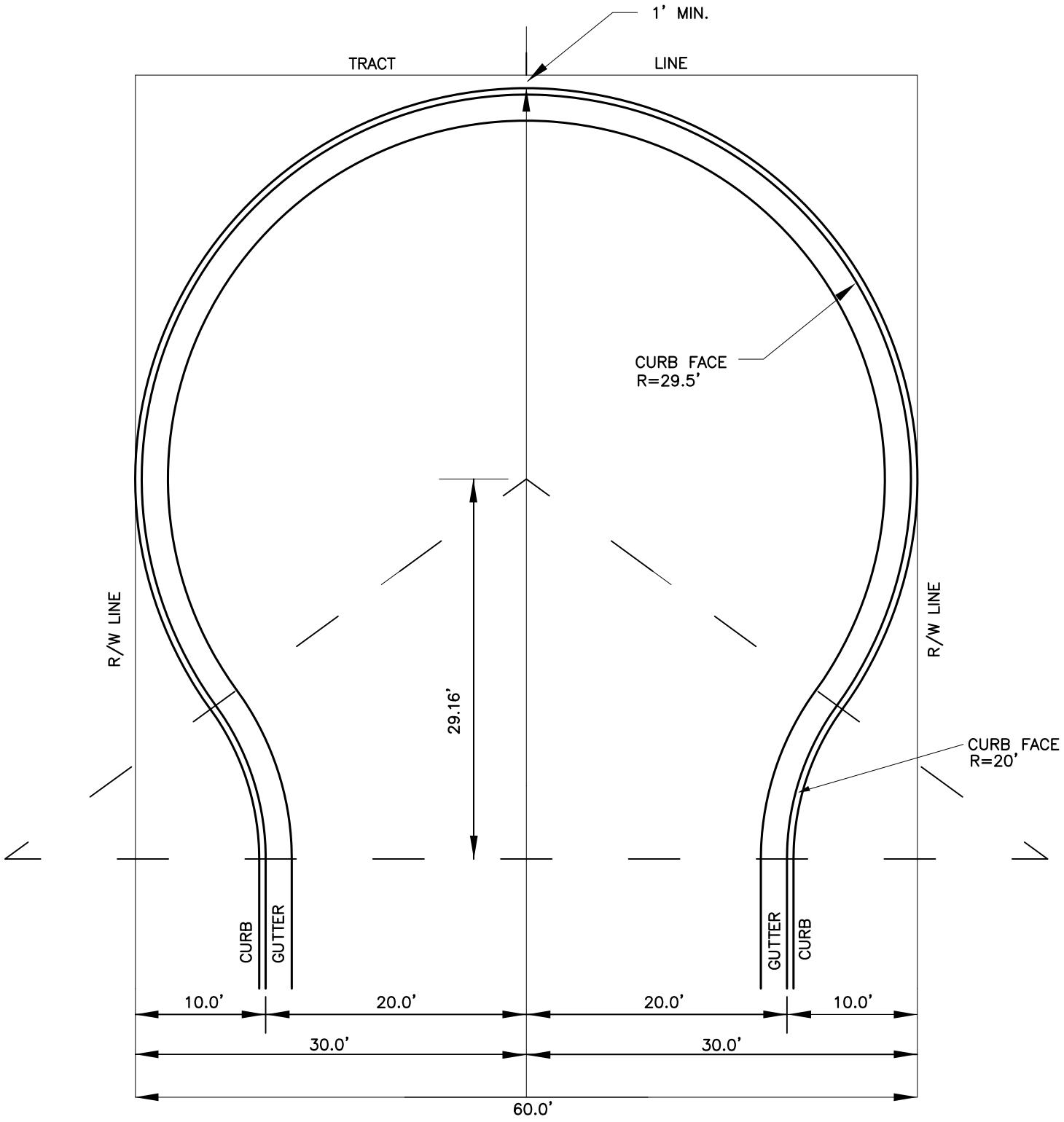

NOTE:
CURB & GUTTER CONSTRUCTED AS REQUIRED

NOT TO SCALE

Public Works Director

TEHAMA COUNTY STANDARD PLANS

REV. NO.	DATE:	BY	TYPICAL ROAD SECTIONS FOR TEMPORARY CUL-DE-SAC	DATE 1/07
				DWG. NO. 0908

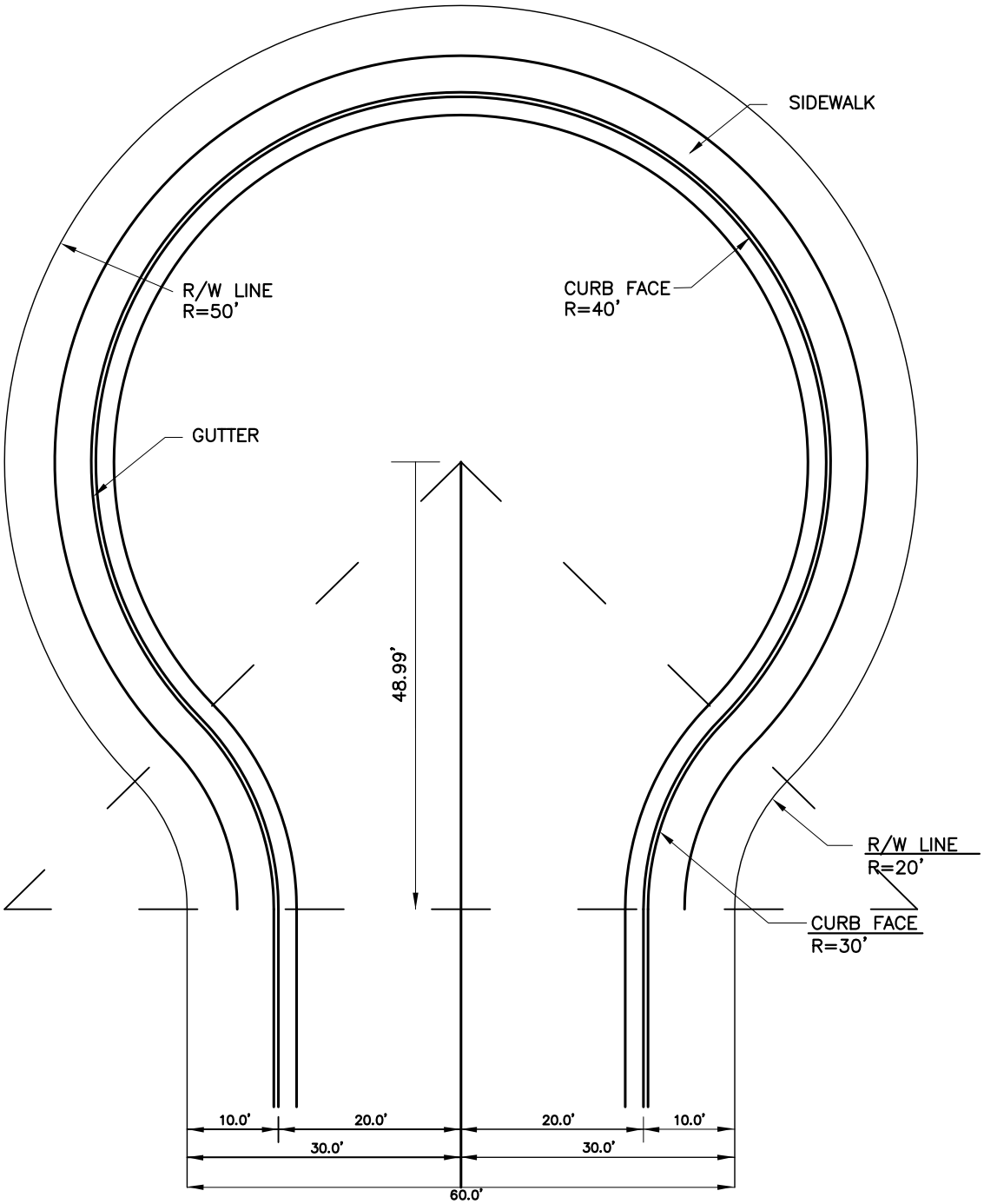

NOTE:
CURB, GUTTER & SIDEWALK CONSTRUCTED AS REQUIRED

NOT TO SCALE

Public Works Director

TEHAMA COUNTY STANDARD PLANS

REV. NO.	DATE:	BY		DATE
			TYPICAL ROAD SECTIONS FOR PERMANENT CUL-DE-SAC	1/07
				DWG. NO.
				0909

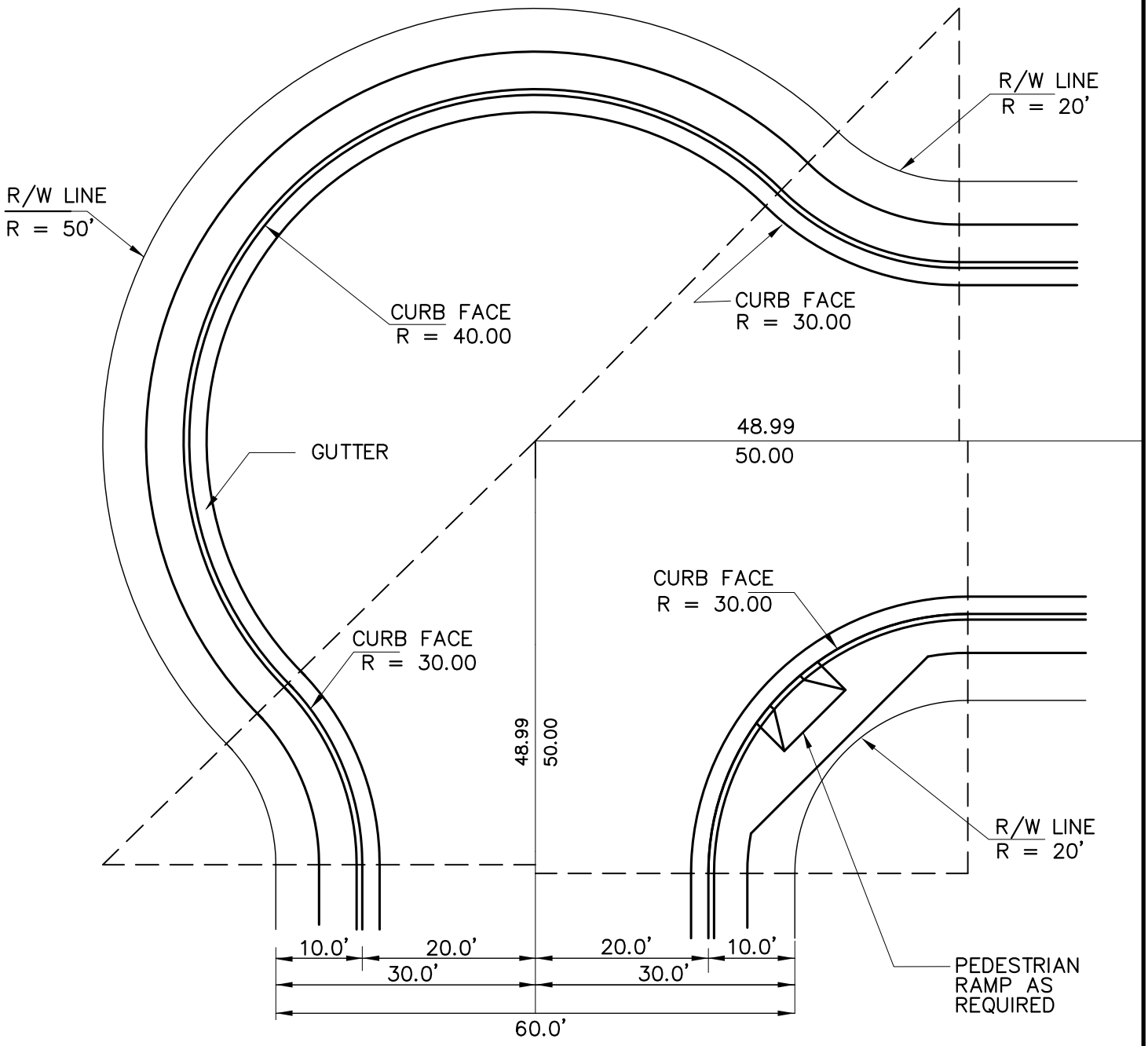

NOTE:

1. CURB, GUTTER, & SIDEWALK CONSTRUCTED AS REQUIRED.

NOT TO SCALE

Public Works Director

TEHAMA COUNTY STANDARD PLANS

REV. NO.	DATE:	BY		DATE
			TYPICAL ROAD SECTIONS FOR OFFSET CUL-DE-SAC	1/07
				DWG. NO.
				0910

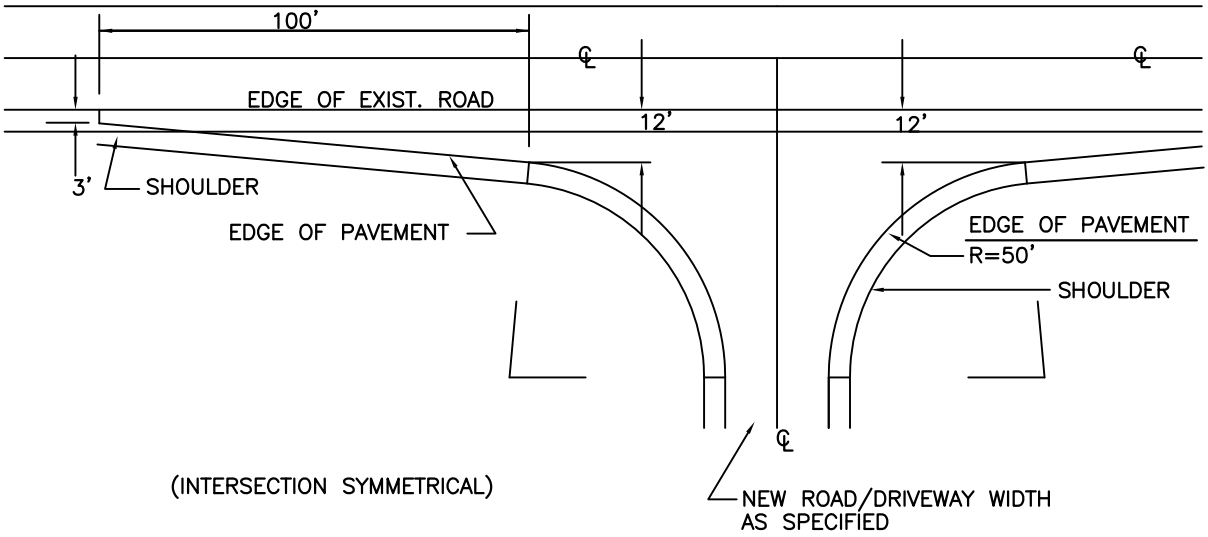

PLAN

Public Works Director

NOT TO SCALE

TEHAMA COUNTY STANDARD PLANS

REV. NO.	DATE:	BY		DATE
1	07/30/08	G.A.	CONNECTION FOR COLLECTOR PUBLIC ROAD	1/07
				DWG. NO.
				0911

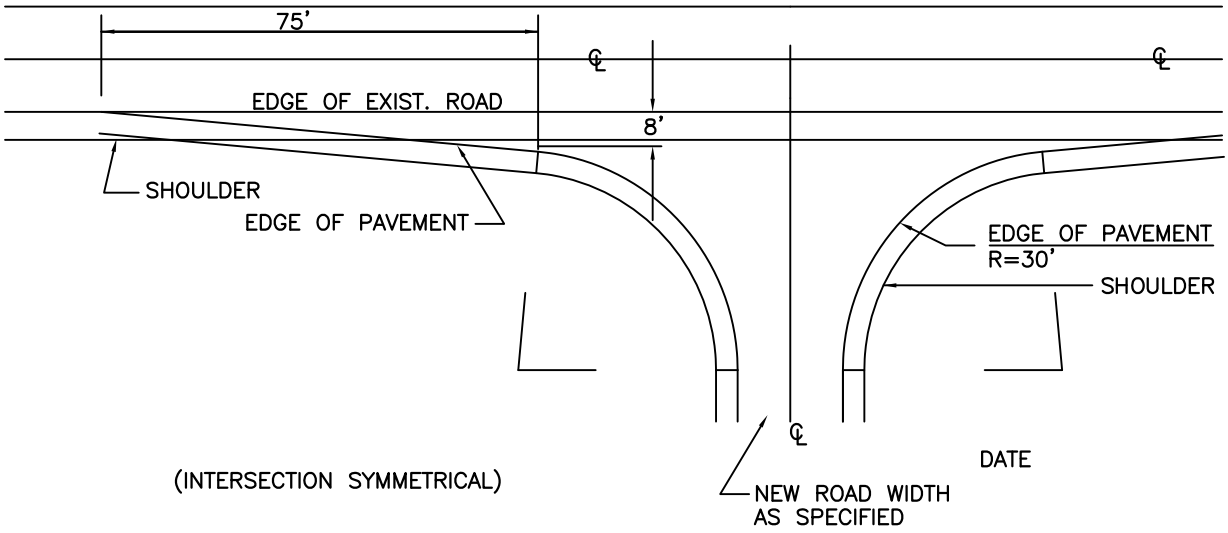

PLAN

DATE

Public Works Director

NOT TO SCALE

TEHAMA COUNTY STANDARD PLANS

REV. NO.	DATE:	BY	CONNECTION FOR LOCAL PUBLIC ROAD	DATE 1/07
				DWG. NO. 0912

CROSS–SLOPE DEFINITION

THE CROSS–SLOPE OF A LOT IS DEFINED AS THE AVERAGE SLOPE OF AT LEAST THREE CROSS–SLOPE LINES: ONE NEAR EACH LOT SIDE LINE AND ONE OR MORE IN THE MIDDLE OF THE LOT. A CROSS–SLOPE LINE IS A LINE ON A CROSS SECTION CONNECTING THE FINISHED CENTERLINE WITH A POINT ON THE LOT WHICH IS LOCATED BETWEEN THE SETBACK LINE AND A LINE AT LEAST 50 FEET BEHIND THE SETBACK LINE THAT WILL GIVE THE STEEPEST SLOPE.

EXAMPLES OF CROSS–SLOPE

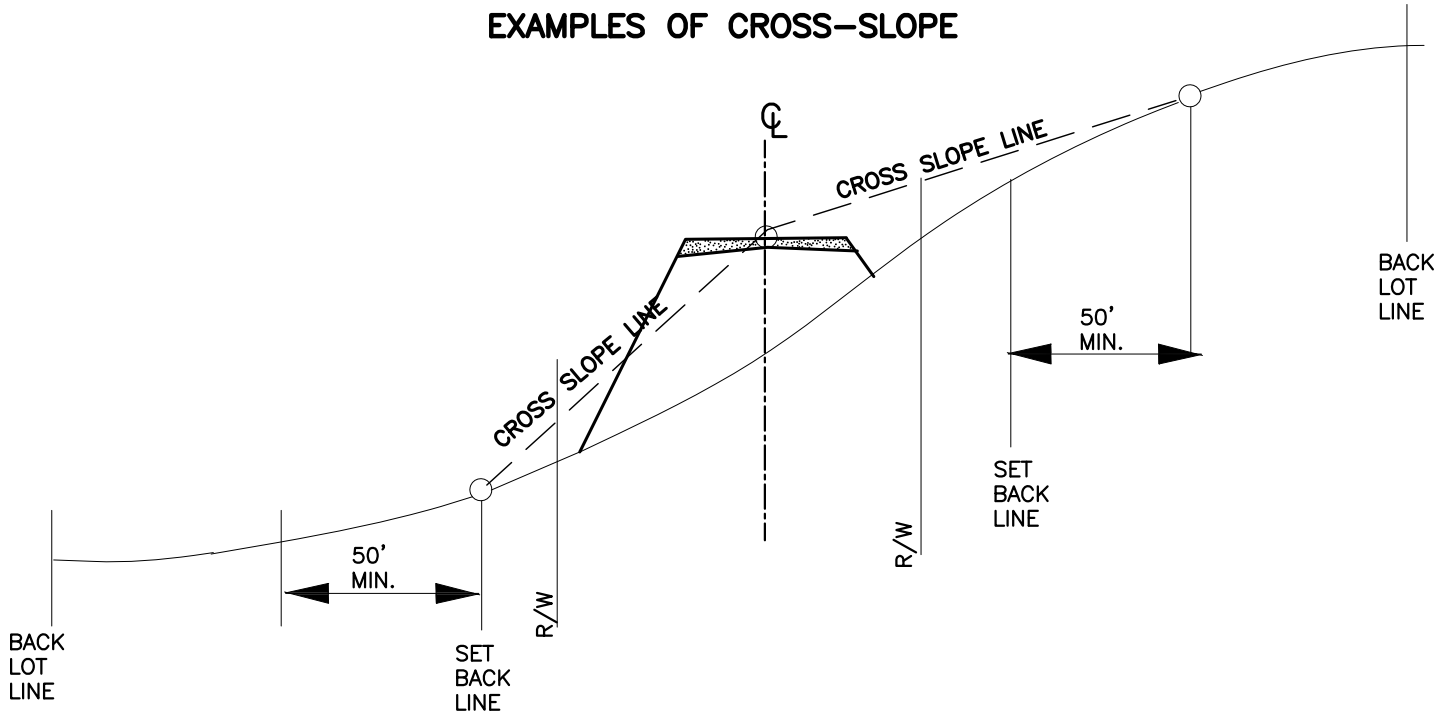

NOTES

1. LOTS WITH MORE THAN 5 FEET OF CUT OR FILL ON THE STREET FRONTAGE WILL REQUIRE INDIVIDUAL COUNTY ENGINEER APPROVAL.

2. AT THE TIME OF SUBMITTAL OF THE IMPROVEMENT PLANS, THE DEVELOPER MUST BE PREPARED TO:
   A. SHOW THAT A SUITABLE BUILDING SITE CAN BE MADE ON EACH LOT.
   B. SHOW HOW VEHICULAR ACCESS CAN BE MADE TO EACH BUILDING SITE.
   C. SHOW SUFFICIENT DRAINFIELD AREA TO MEET THE REQUIREMENTS OF THE HEALTH DEPARTMENT, OR GRAVITY ACCESS TO A COMMUNITY SEWER SYSTEM.

NOT TO SCALE

Public Works Director

TEHAMA COUNTY STANDARD PLANS

REV. NO.	DATE:	BY	CROSS SLOPE DEFINITION	DATE 1/07
				DWG. NO. 0913

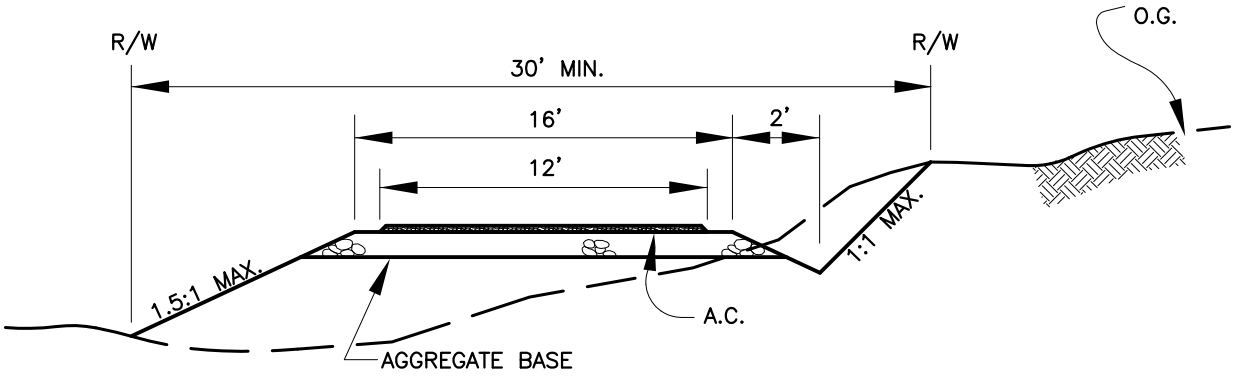

NOTES:

1. FINAL STRUCTURAL SECTION TO BE DETERMINED BY 'R' VALUE TESTING.
2. RECIPROCAL EASEMENT AND ROAD MAINTENANCE AGREEMENT REQUIRED FOR TWO LOTS.

NOT TO SCALE

Public Works Director

TEHAMA COUNTY STANDARD PLANS

REV. NO.	DATE:	BY		DATE 1/07
			TYPICAL DRIVEWAY SECTIONS	DWG. NO. 0914

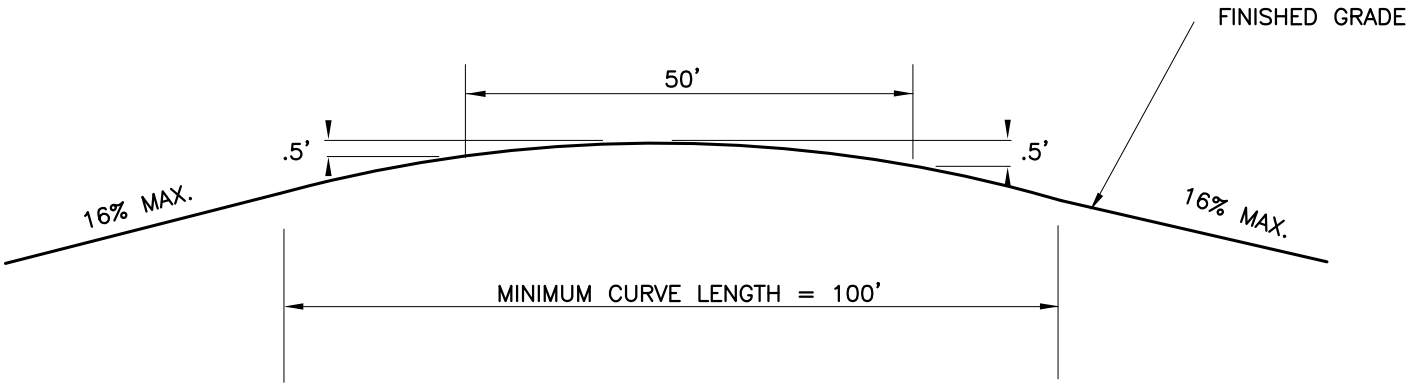

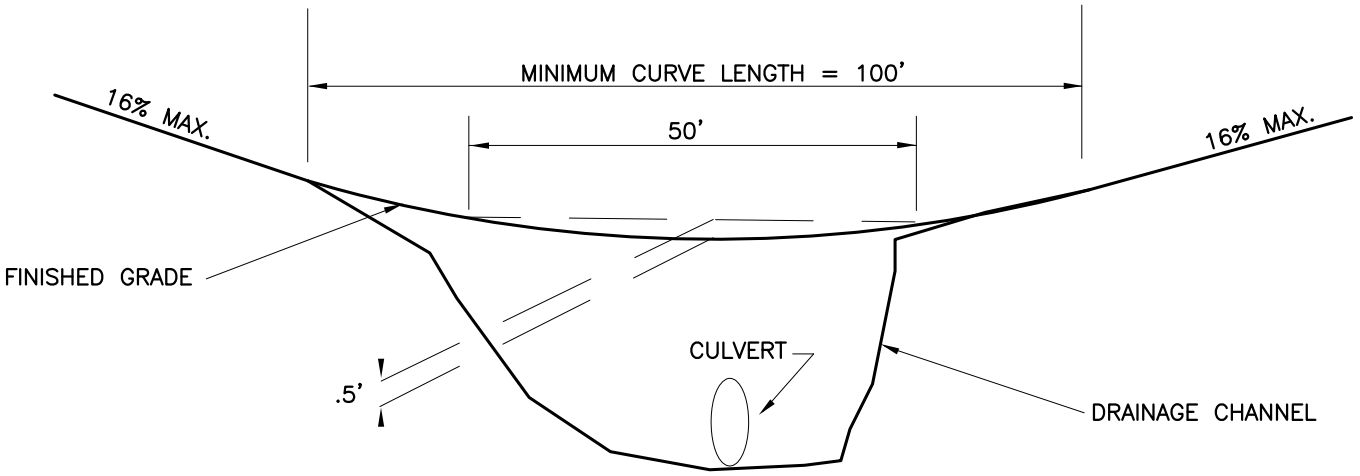

NOTE:

1. CULVERT SIZE TO BE ESTABLISHED BY A REGISTERED CIVIL ENGINEER
2. CULVERT SHALL HAVE A MINIMUM DEPTH OF 24" OF COVER OR AN AMOUNT EQUAL TO 1/2 OF THE DIAMETER OF THE CULVERT, WHICHEVER IS GREATER.
3. CONTACT THE COUNTY BUILDING DEPT TO DETERMINE WHETHER A GRADING PERMIT IS REQUIRED.
4. CONTACT THE CALIFORNIA DEPT. OF FISH & GAME PRIOR TO GRADING WITHIN CREEKS AND DRAINAGES.

NOT TO SCALE

Public Works Director

TEHAMA COUNTY STANDARD PLANS

REV. NO.	DATE:	BY		DATE
			TYPICAL VERTICAL CURVES FOR PRIVATE DRIVEWAYS	1/07
				DWG. NO. 0915

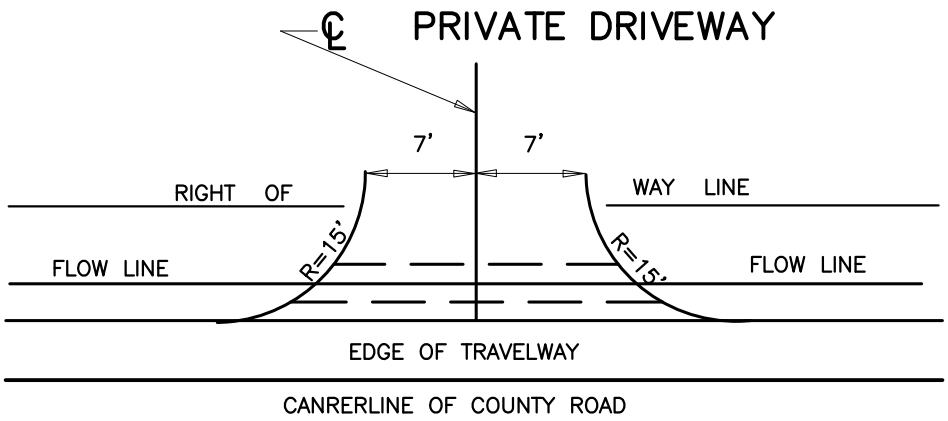

PLAN VIEW

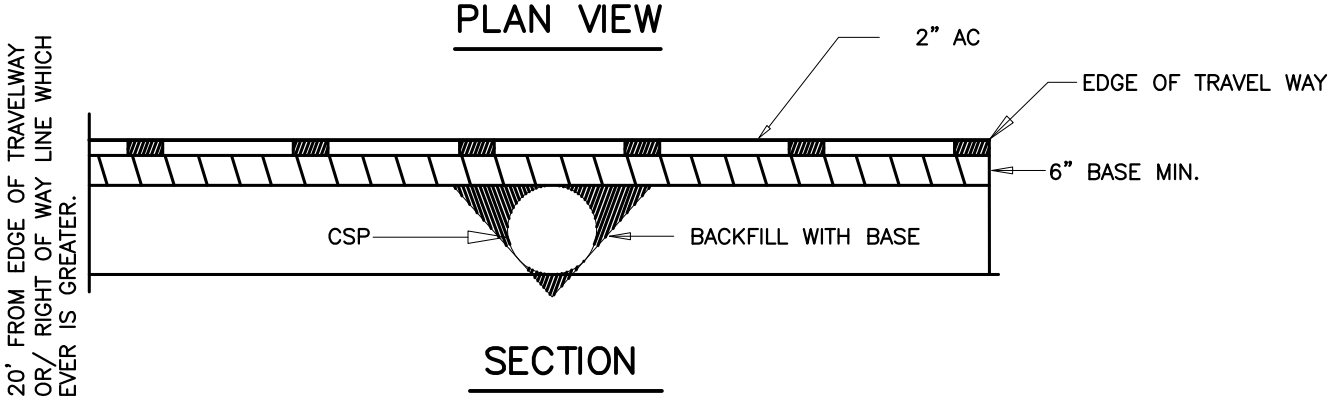

SECTION

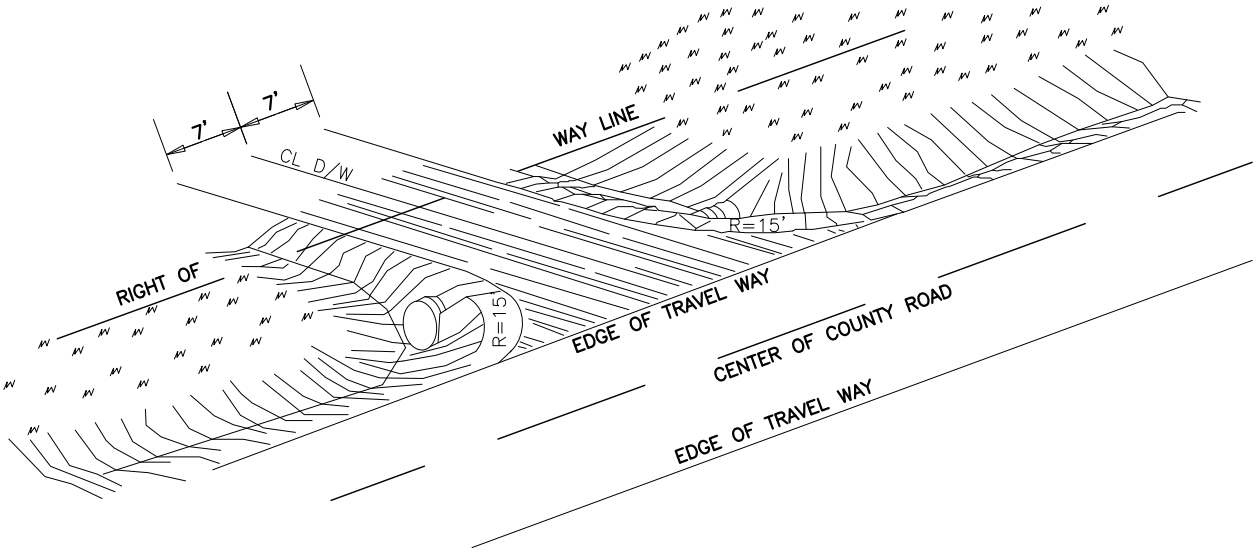

ISOMETRIC VIEW

NOTE:

1. ALL DRIVEWAY APROACHES SHALL MEET THE APPROVAL OF THE COUNTY ENGINEER.
2. RETURN YELLOW CARD UPON COMPLETION OF WORK. (AFTER PROPER SURFACING HAS BEEN APPLIED)
3. MUST COMPLY WITH GENERAL ENCROACHMENT PERMIT CONDITIONS

Public Works Director

NOT TO SCALE

TEHAMA COUNTY STANDARD PLANS

REV. NO.	DATE:	BY	TYPICAL DRIVEWAY ENCROACHMENT WITH CULVERT	DATE 1/07
				DWG. NO. 0916

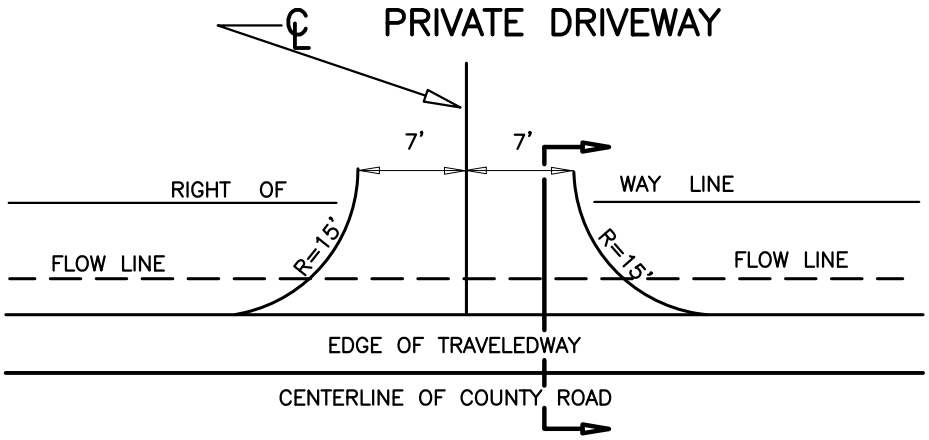

PLAN VIEW

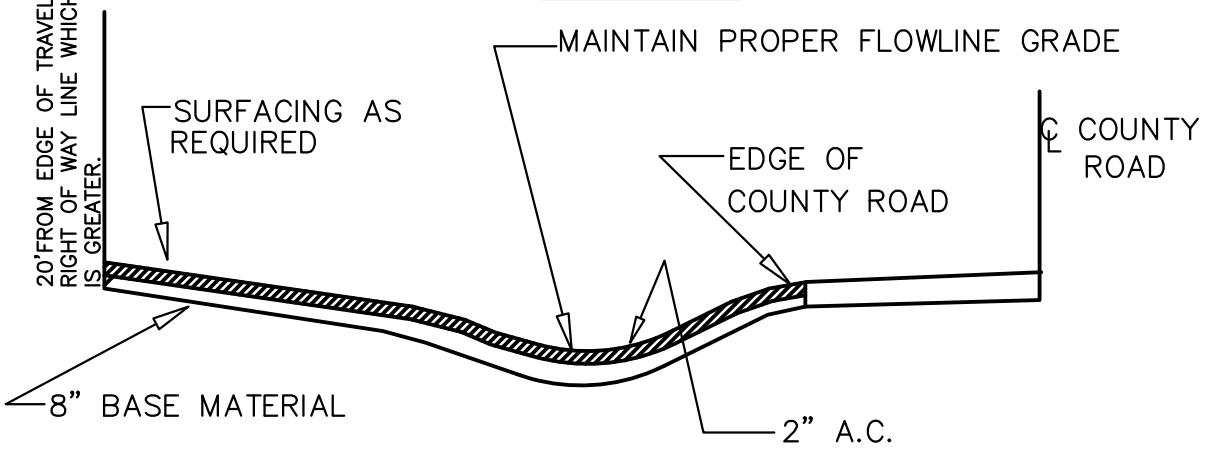

NOTE:
MUST COMPLY WITH GENERAL ENCROACHMENT PERMIT CONDITIONS

SECTION

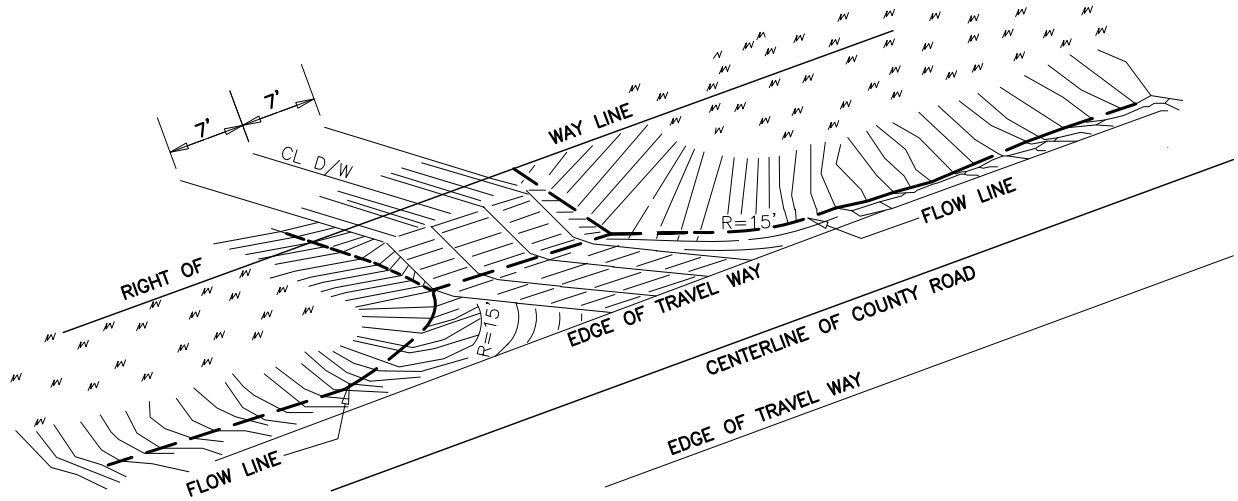

ISOMETRIC VIEW

Public Works Director

NOT TO SCALE

TEHAMA COUNTY STANDARD PLANS

REV. NO.	DATE:	BY	TYPICAL PRIVATE DRIVEWAY ENCROACHMENT	DATE 1/07
				DWG. NO. 0917

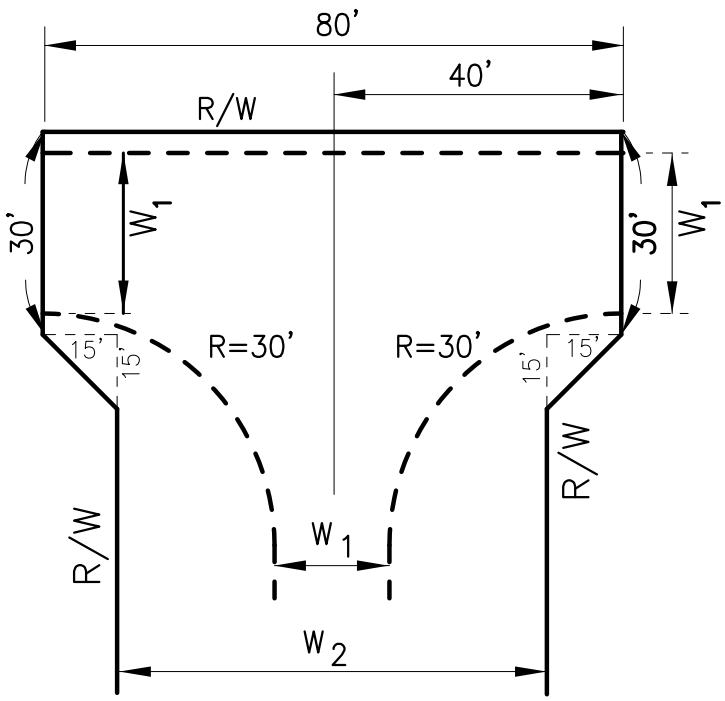

ALT. A

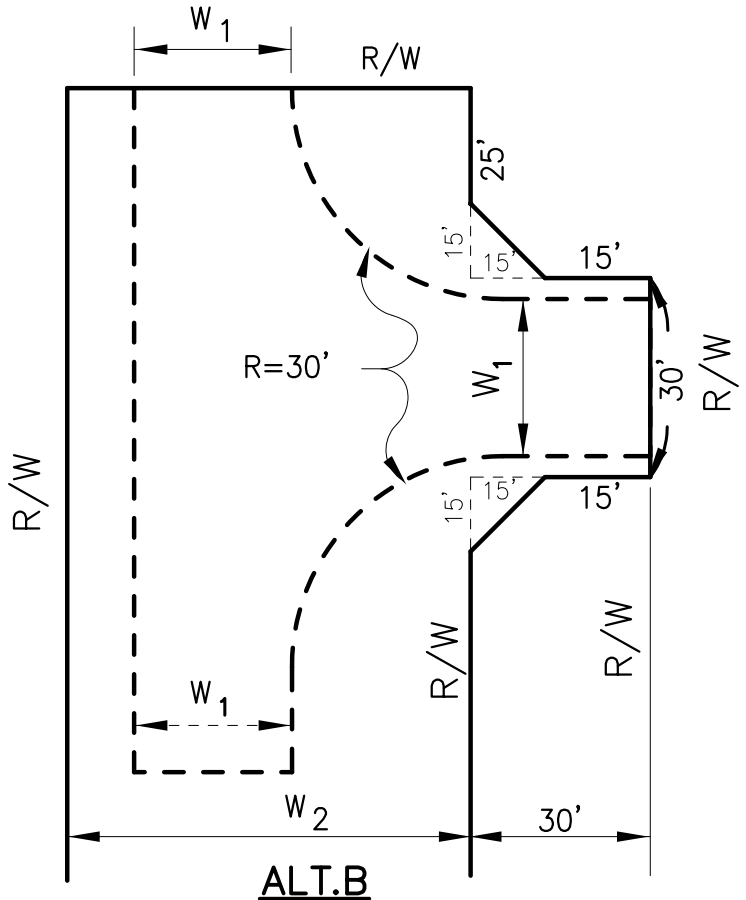

ALT.B

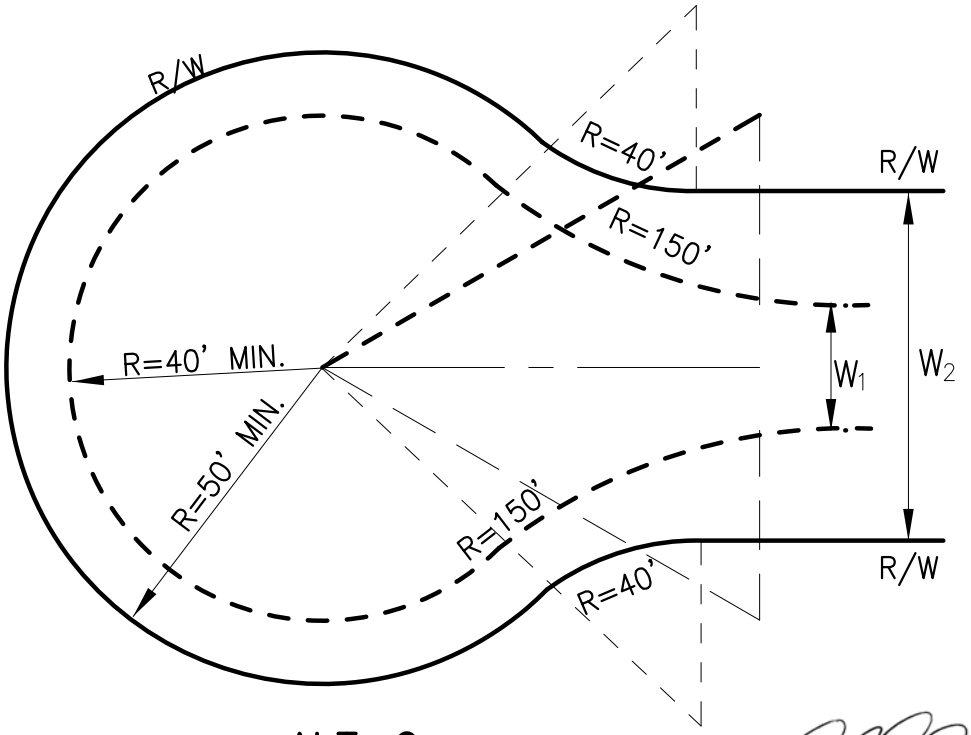

ALT. C

NOTE

1. ENGINEER MUST PROVIDE JUSTIFICATION FOR USE OF ALT A.
2. ALT. "C" IS PREFERRED.
3. ALT. "A" AND "B" MAY BE ALLOWED UPON APPROVAL BY THE T.C.P.W. DIRECTOR

- - - - - EDGE OF PAVEMENT
W1 WIDTH OF PAVEMENT
W2 WIDTH OF REQUIRED R/W

NOT TO SCALE

Public Works Director

TEHAMA COUNTY STANDARD PLANS

REV. NO.	DATE:	BY		DATE 1/07
			TURNAROUND ALTERNATES FOR PRIVATE ROADWAYS	DWG. NO. 0918

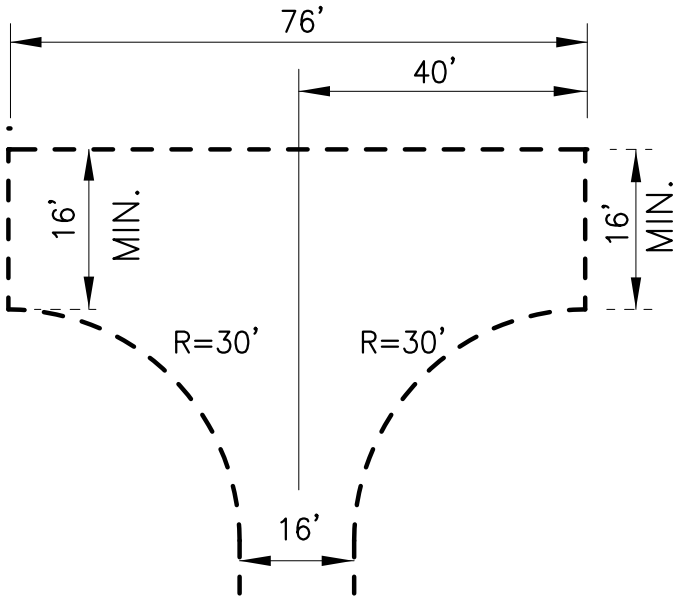

ALT. A

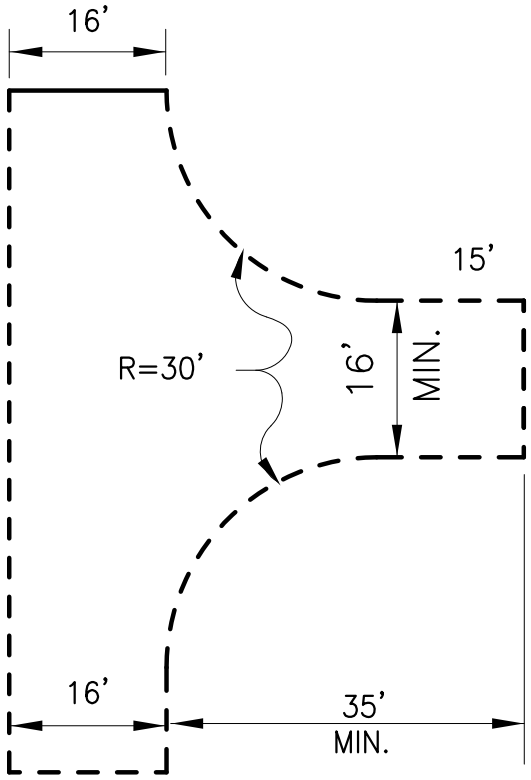

ALT.B

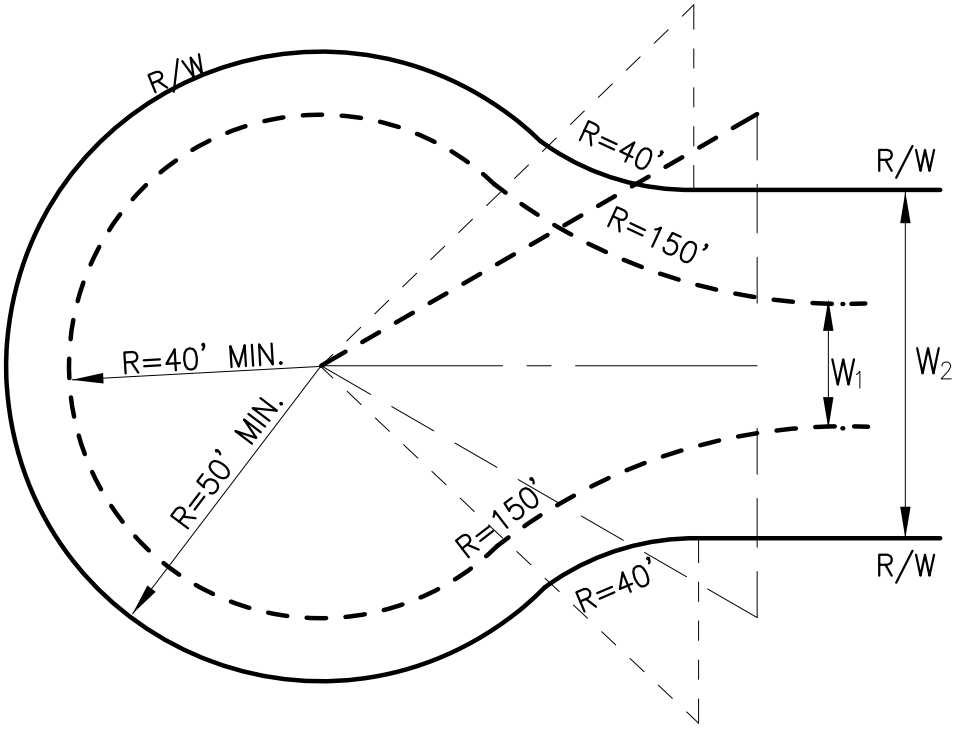

ALT. C

NOTE

- - - - - BOUNDARY OF CLEARED AND LEVELED AREA

NOT TO SCALE

Public Works Director

TEHAMA COUNTY STANDARD PLANS

REV. NO.	DATE:	BY		DATE 1/07
			FIRE STD. TURNAROUND ALTERNATES FOR PRIVATE DRIVEWAY OVER 200' IN LENGTH	DWG. NO. 0919

REQUIRED SETBACKS (FEET)

H	SETBACKS a	SETBACKS b
UNDER 5	0	1
5 TO 30	H/2	H/5
OVER 30	15	6

TABLE 1

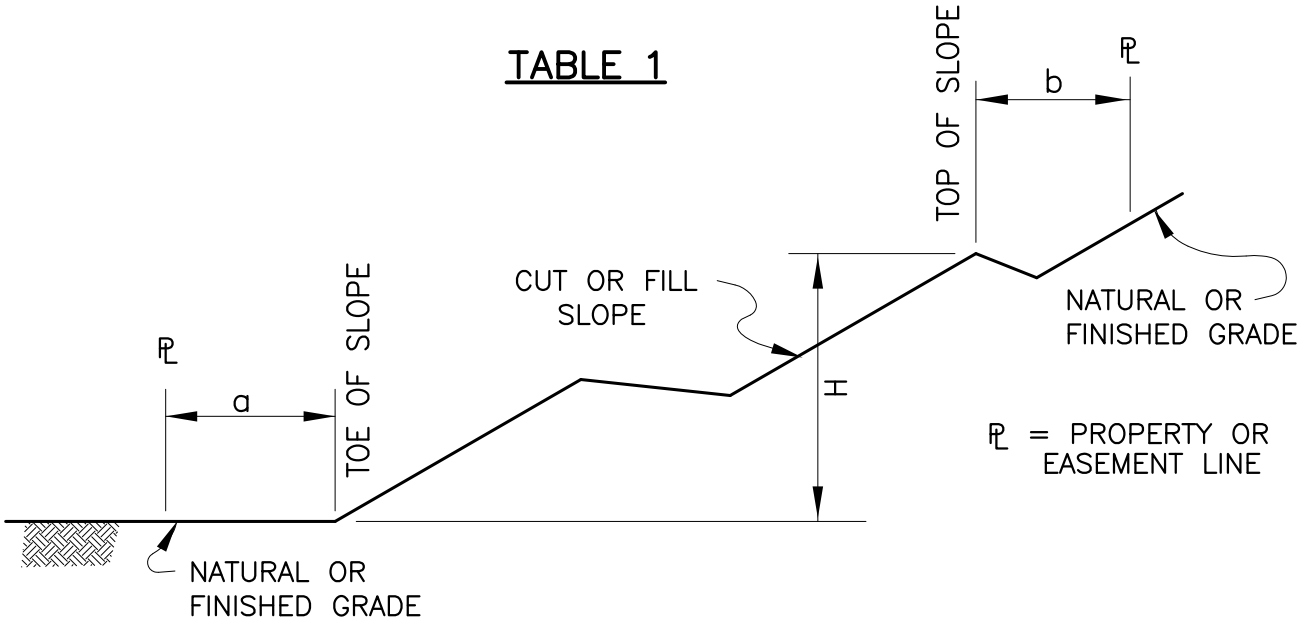

FIGURE 1

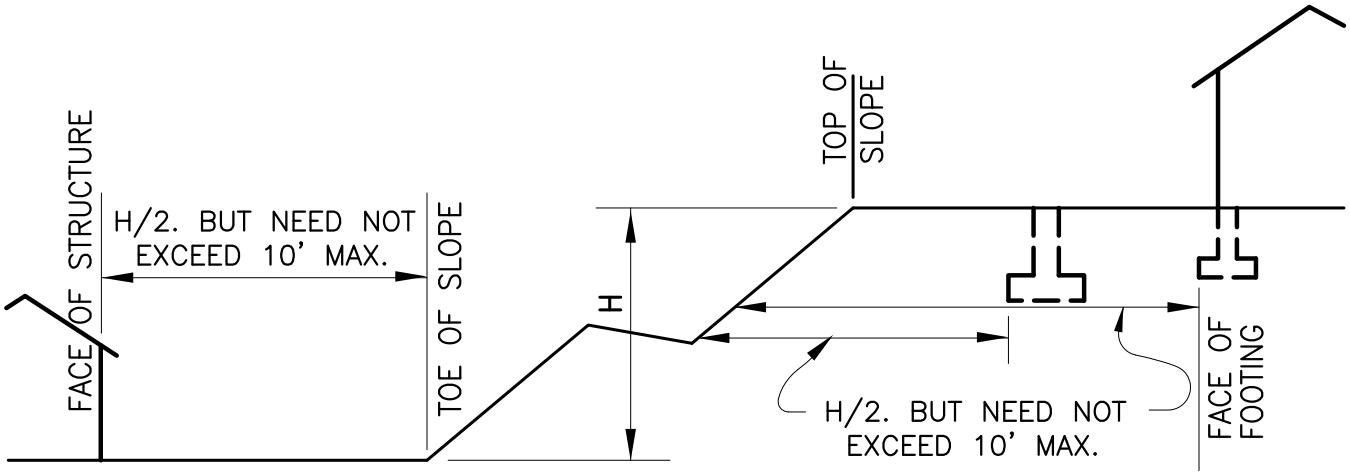

FIGURE 2

Public Works Director

NOT TO SCALE

TEHAMA COUNTY STANDARD PLANS

REV. NO.	DATE:	BY		DATE 1/07
			TYPICAL SLOPE SETBACK	DWG. NO. 0920

CALL U.S.A.
1-800-642-2444
PRIOR TO WORKING

NOTE:
1. INSTALLATION MAY REQUIRE A COUNTY ENCROACHMENT PERMIT.
2. EXCEPTIONS TO SIGN LOCATION MUST BE APPROVED BY THE DIRECTOR OF PUBLIC WORKS.

SIGN DETAIL

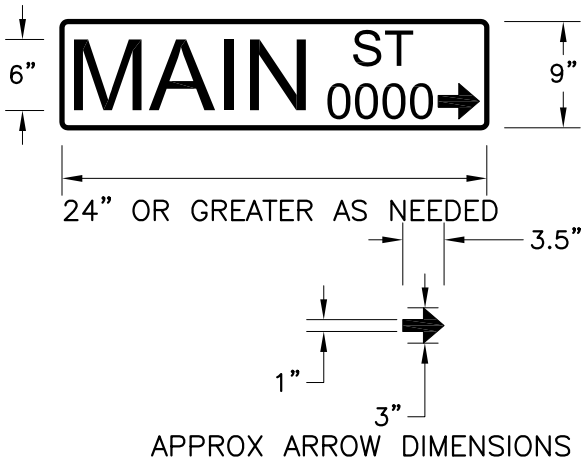

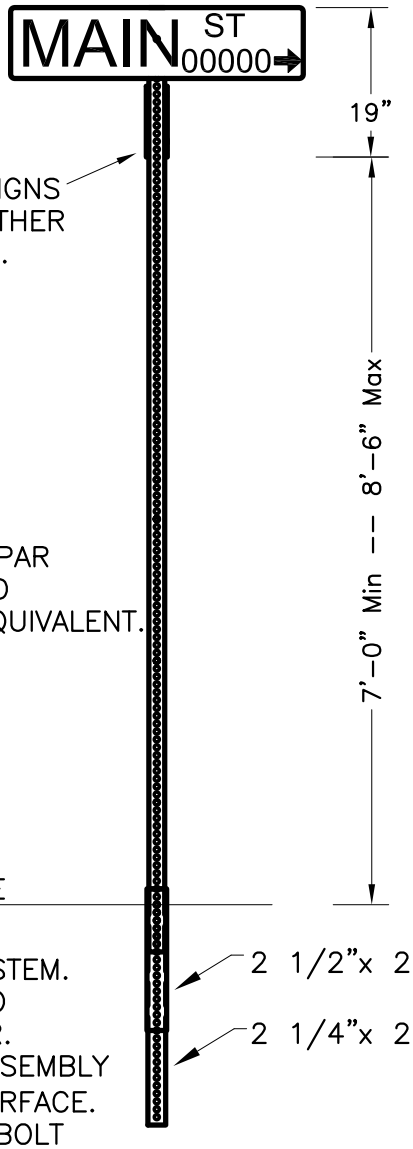

USE 2"X10' 12 GUAGE SQUARE UNISTRUT TELESPAR POSTS WITH ANCHOR AND SLEEVE ASSEMBLY OR EQUIVALENT.

STREET NAME SIGN SHALL HAVE 6" LETTER CHARACTERS FOR THE PRIMARY NAME, AND SUPPLEMENTARY LETTERING TO INDICATE TYPE OF STREET (SUCH AS RD, AVE, ST, ETC.) AND NUMERICAL COORDINANCE SHALL HAVE 3" CHARACTERS STREET NAME SIGNS SHALL BE .080" ALUMINUM BACK WITH REFLECTIVE SHEETING AND CHARACTERS MEETING AASHTO M268-77 REQUIREMENTS. PUBLIC STREET NAME SIGNS SHALL BE GREEN AND PRIVATE ROADS BLUE, BOTH SHALL HAVE WHITE LETTERING. STREET NAME SIGNS ARE PLACED BACK TO BACK SO THEY MAY BE SEEN FROM BOTH DIRECTIONS.

YIELDING BREAKAWAY SYSTEM. DRIVE ANCHOR BASE AND OUTER SLEEVE TOGETHER. LEAVING THE ANCHOR ASSEMBLY 1" TO 2" ABOVE THE SURFACE. INSERT SIGN POST AND BOLT INTO ANCHOR ASSEMBLY.

Public Works Director

NOT TO SCALE

TEHAMA COUNTY STANDARD PLANS

REV. NO.	DATE:	BY	STREET SIGN SUBURBAN AREA	DATE 1/07 DWG. NO. 0921

CALL U.S.A.
1-800-642-2444
PRIOR TO WORKING

NOTE:
1. NSTALLATION MAY REQUIRE A COUNTY ENCROACHMENT PERMIT.
2. EXCEPTIONS TO SIGN LOCATION MUST BE APPROVED BY THE DIRECTOR OF PUBLIC WORKS.

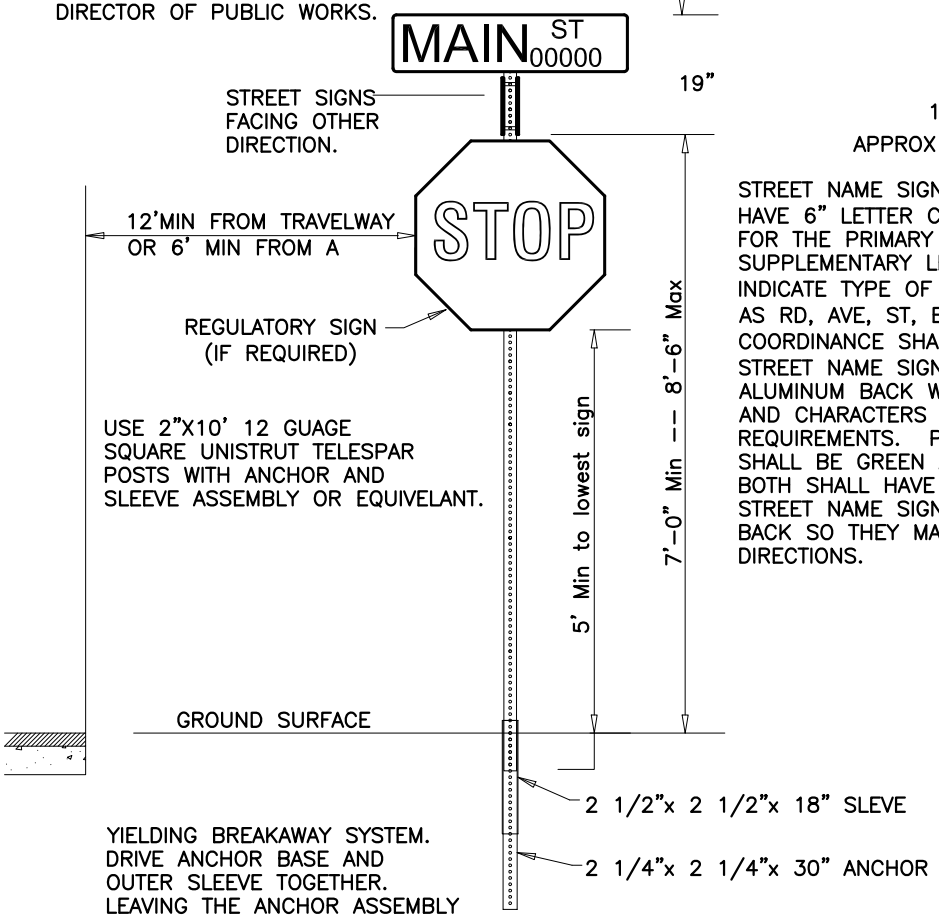

YIELDING BREAKAWAY SYSTEM. DRIVE ANCHOR BASE AND OUTER SLEEVE TOGETHER. LEAVING THE ANCHOR ASSEMBLY 1" TO 2" ABOVE THE SURFACE. INSERT SIGN POST AND BOLT INTO ANCHOR ASSEMBLY.

SIGN DETAIL

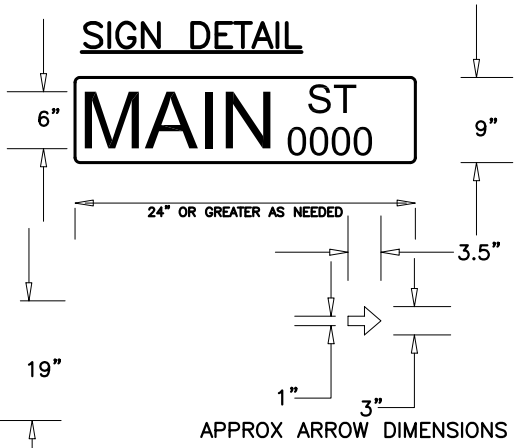

STREET NAME SIGN SHALL HAVE 6" LETTER CHARACTERS FOR THE PRIMARY NAME, AND SUPPLEMENTARY LETTERING TO INDICATE TYPE OF STREET (SUCH AS RD, AVE, ST, ETC.) AND NUMERICAL COORDINANCE SHALL HAVE 3" CHARACTERS STREET NAME SIGNS SHALL BE .080" ALUMINUM BACK WITH REFLECTIVE SHEETING AND CHARACTERS MEETING AASHTO M268-77 REQUIREMENTS. PUBLIC STREET NAME SIGNS SHALL BE GREEN AND PRIVATE ROADS BLUE, BOTH SHALL HAVE WHITE LETTERING. STREET NAME SIGNS ARE PLACED BACK TO BACK SO THEY MAY BE SEEN FROM BOTH DIRECTIONS.

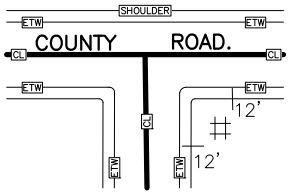

STANDARD LOCATION

EXCEPTION MUST BE APPROVED BY DIRECTOR OF PUBLIC WORKS

Public Works Director

NOT TO SCALE

TEHAMA COUNTY STANDARD PLANS

REV. NO.	DATE:	BY	STREET SIGN WITH STOP SIGN SUBURBAN AREA	DATE 1/07
				DWG. NO. 0922

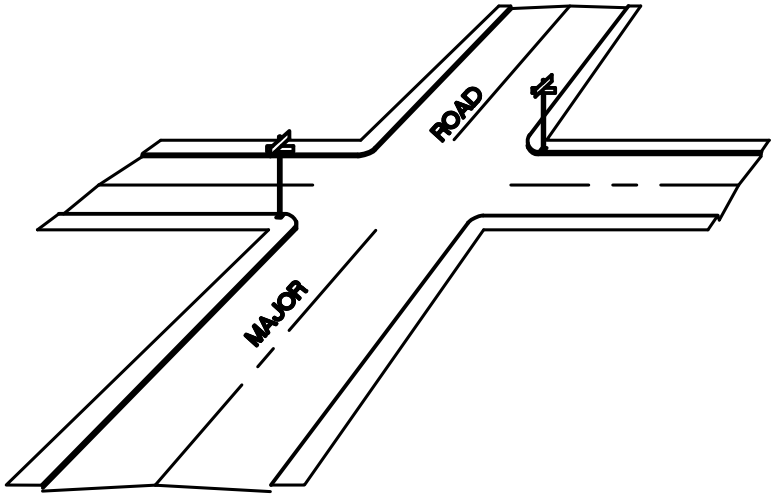

LOCATION AT INTERSECTION

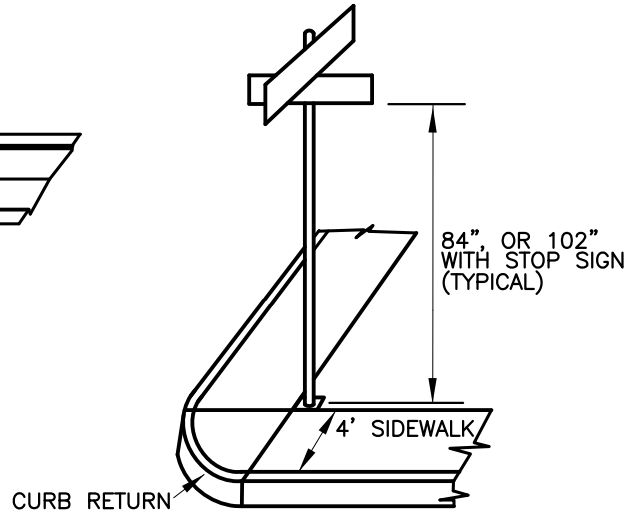

LOCATION IN 4FT.
MONOLITHIC SIDEWALK

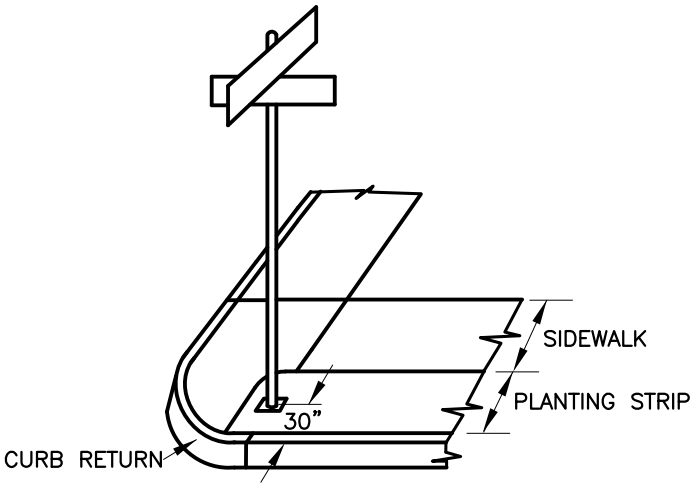

LOCATION IN PLANTING STRIP

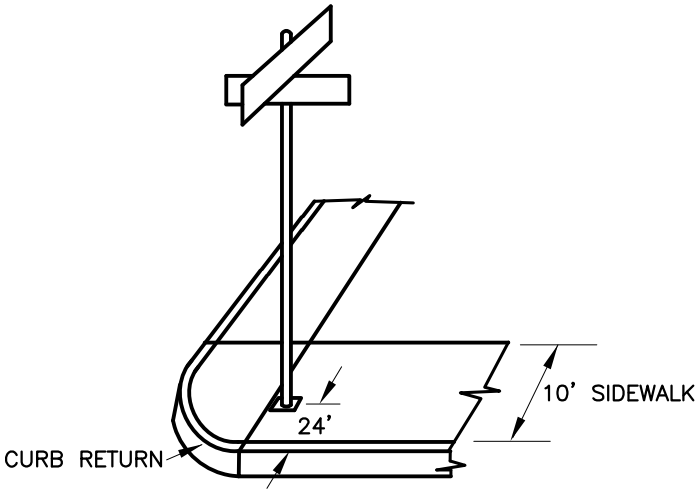

LOCATION IN 10FT.
MONOLITHIC SIDEWALK

NOTES

1. CORNER FOR INSTALLATION SHALL BE AS DESIGNATED BY THE ENGINEER.
2. SAWCUT REQUIRED IF SIGN INSTALLED AFTER SIDEWALK POURED.
3. WHEN POURED IN SIDEWALK, POLES WILL BE SET PRIOR TO SIDEWALK POUR.
4. UTILIZE SAME PIPE FOR STOP SIGN AND STREET NAME SIGN WHERE POSSIBLE.
5. RURAL INSTALLATION; SIGNS SHALL BE LOCATED AS SHOWN, SET BACK AS REQUIRED.

NOT TO SCALE

Public Works Director

TEHAMA COUNTY STANDARD PLANS

REV. NO.	DATE:	BY		DATE
			STREET SIGN URBAN AREA	1/07
				DWG. NO.
				0923

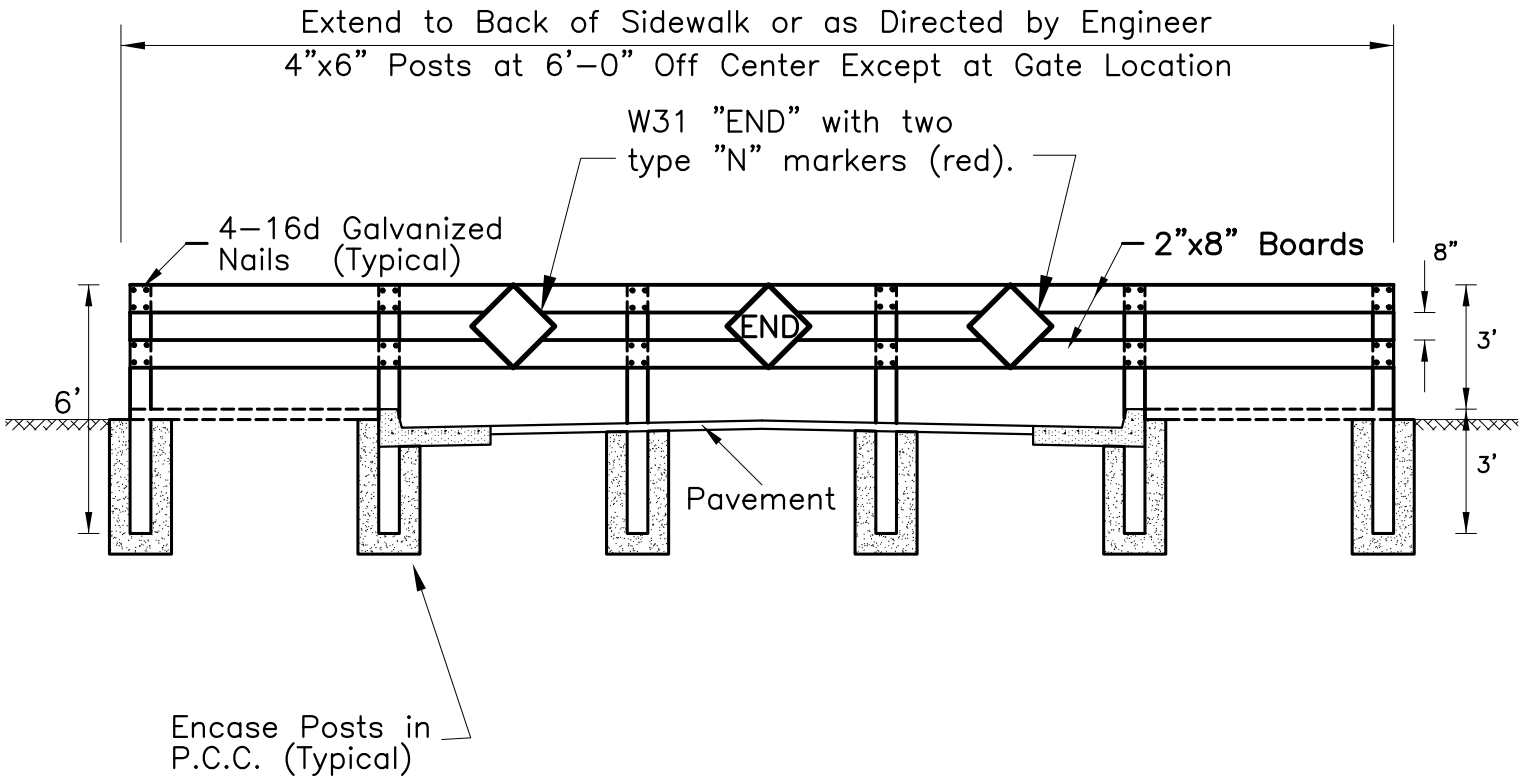

NOTE:

1. All wood shall be S4S construction grade redwood or P.T.
2. All exposed surfaces shall be painted with 1 (one) prime coat and 2 (two) coats of outside white where required by local agency.
3. All posts shall be plumb in concrete (class 4 B 2000)
4. Boards and post tops shall be level.
5. Where gate is indicated on plans, locate at center of road.

NOT TO SCALE

Public Works Director

TEHAMA COUNTY STANDARD PLANS

REV. NO.	DATE:	BY		DATE 1/07
			STREET BARRICADE	DWG. NO. 0924

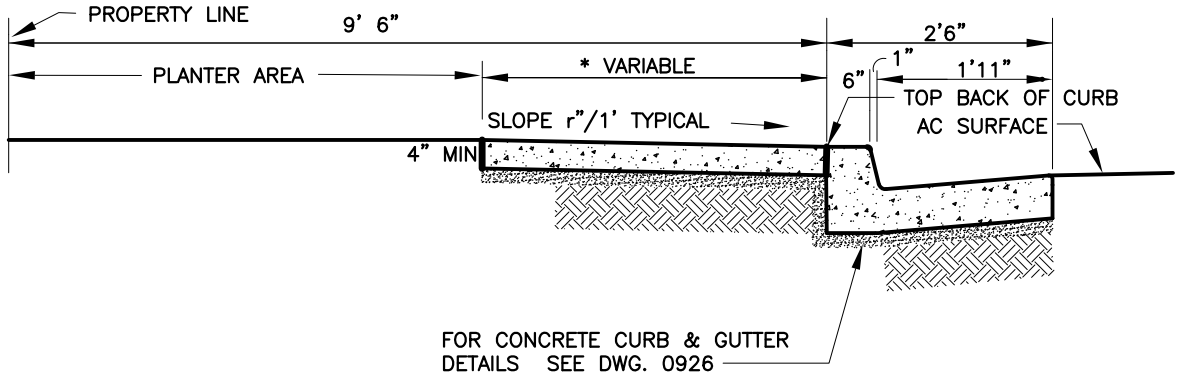

SECTION THROUGH STANDARD VERTICAL
VERTICAL CONCRETE CURB, GUTTER & SIDEWALK

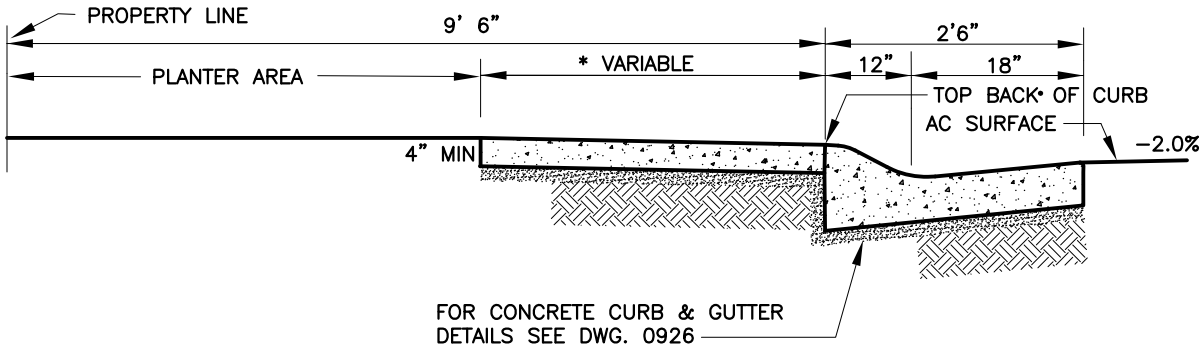

SECTION THROUGH STANDARD VERTICAL
VERTICAL CONCRETE CURB, GUTTER & SIDEWALK

NOTES:

1. THE TOP 6" OF SUBGRADE UNDER SIDEWALK TO BE COMPACTED TO 95% RELATIVE COMPACTION.
2. 2" MIN. SAND OR A.B. CUSHION TO BE COMPACTED TO 95% RELATIVE COMPACTION.
3. 4' 0" MIN RESIDENTIAL
   5' 0" COMMERCIAL
4. NO OBSTRUCTIONS ALLOWED IN SIDEWALK.
5. SIDEWALK MAY BE DETACHED WITH APPROVAL OF THE DIRECTOR OF PUBLIC WORKS.
6. PLANTER AREA MAY BE PLACED BETWEEN SIDEWALK AND CURB

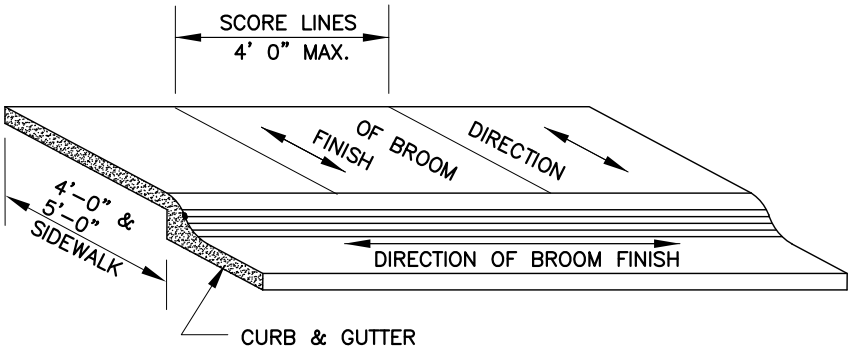

EXPANSION JOINTS NOT TO EXCEED 60' FEET APART.

ALL CURB, GUTTER & SIDEWALK SHALL HAVE A LIGHT BROOM FINISH.

SIDEWALK SCORE LINES DETAIL

NOT TO SCALE

Public Works Director

TEHAMA COUNTY STANDARD PLANS

REV. NO.	DATE:	BY	TYPICAL SECTIONS FOR: VERTICAL & ROLLED CURB, GUTTER & SIDEWALK	DATE 1/07
				DWG. NO. 0925

SECTION
ROLLED CURB
& GUTTER

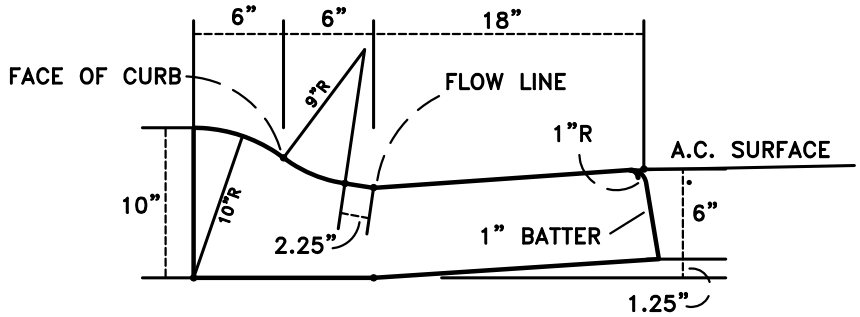

SECTION
VERTICAL CURB
& GUTTER

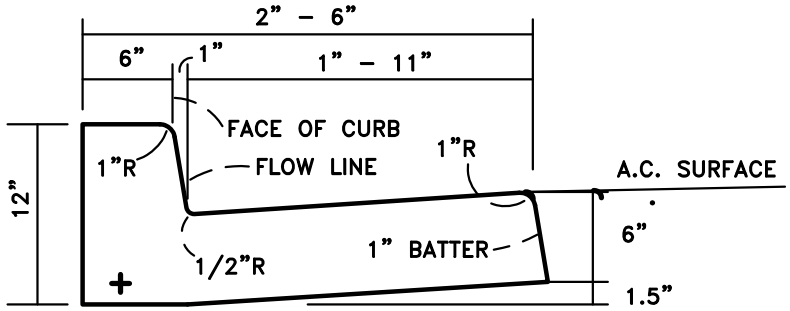

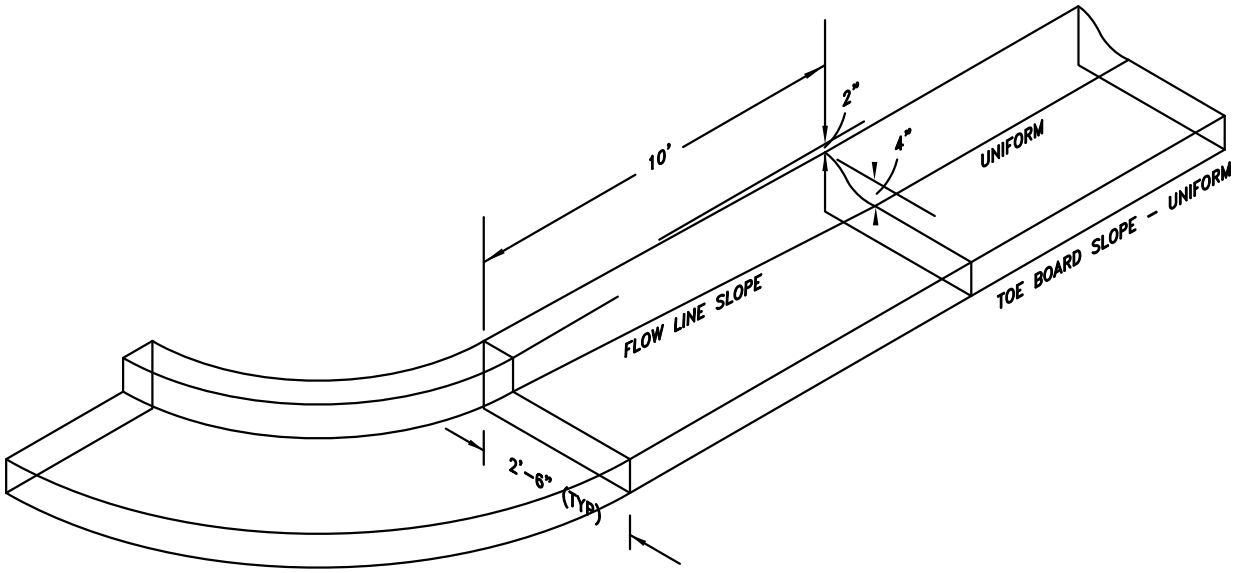

NOTE::
VERTICAL CURB & GUTTER TO BE USED
AT ALL CURB RETURNS.
EXPANSION JOINT AT EACH
END & MIDPOINT OF CURB RETURN.
WIDE EXPANSION JOINTS MAX.
INTERVAL 60'
SCORED CONTROL JOINTS MAX.
INTERVAL 16'

NOT TO SCALE

DETAILS OF TRANSITION
FROM ROLLED CURB & GUTTER
TO VERTICAL CURB & GUTTER

Public Works Director

TEHAMA COUNTY STANDARD PLANS

REV. NO.	DATE:	BY	TYPICAL TRANSITION SECTIONS FOR: VERTICAL & ROLLED CURB, GUTTER & SIDEWALK	DATE 1/07
				DWG. NO. 0926

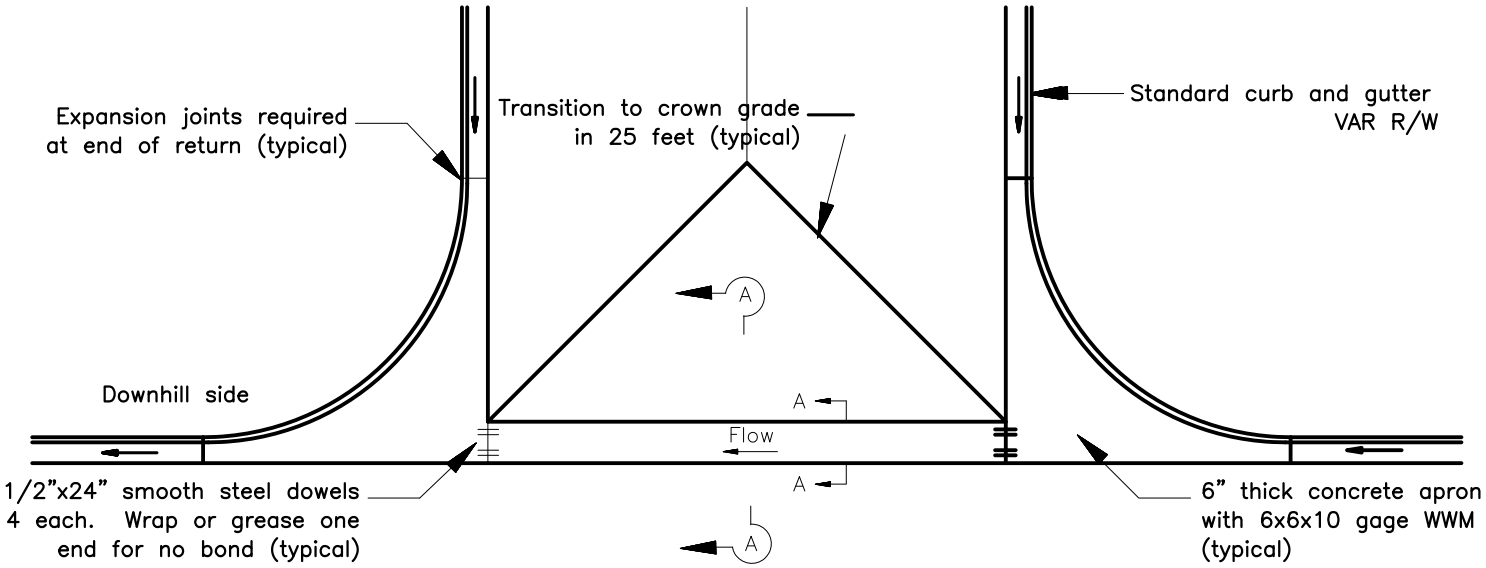

PLAN VIEW

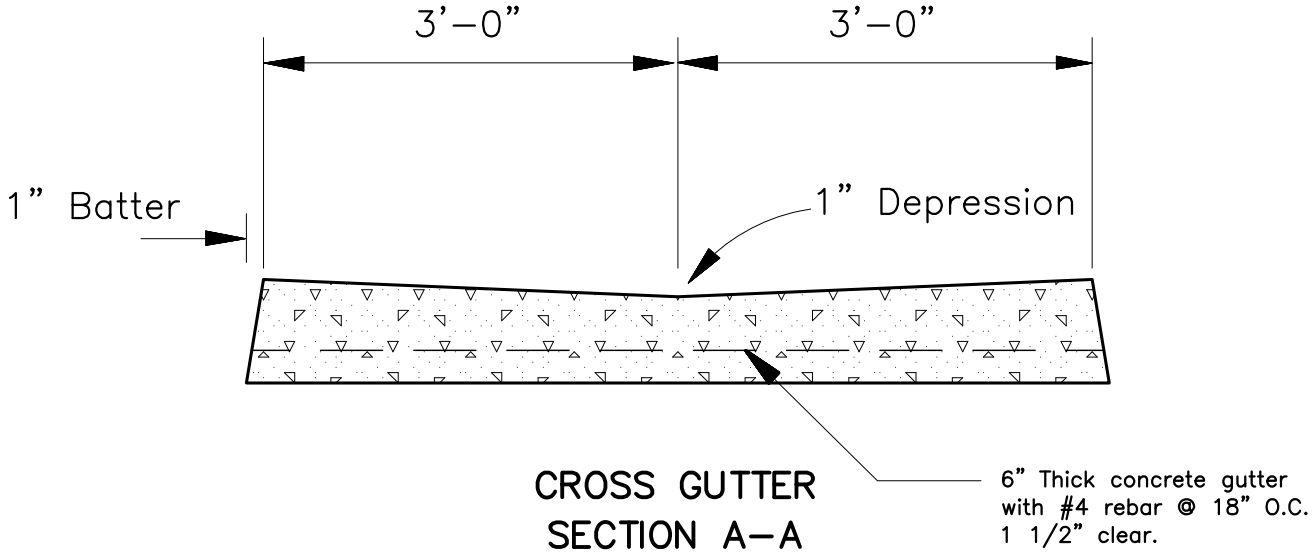

CROSS GUTTER
SECTION A-A

NOTE:

1. Concrete shall be Class A.
2. No concrete shall be placed prior to form inspection by the Engineer.
3. Ashpalt concrete shall be held 1/4 inch high at edge of concrete.

Public Works Director

NOT TO SCALE

TEHAMA COUNTY STANDARD PLANS

REV. NO.	DATE:	BY		DATE
			CURB RETURN AND CROSS GUTTER	1/07
				DWG. NO.
				0927

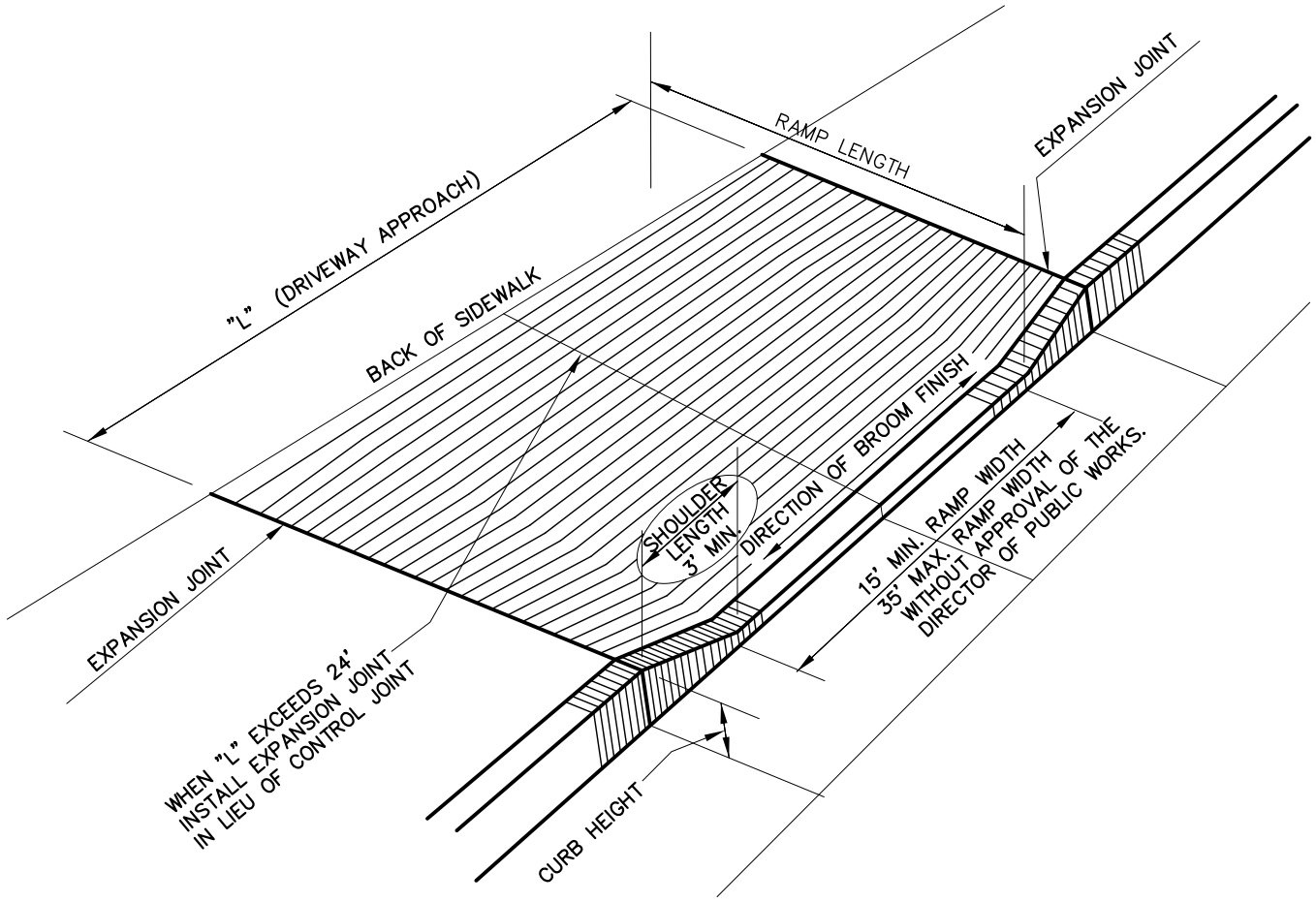

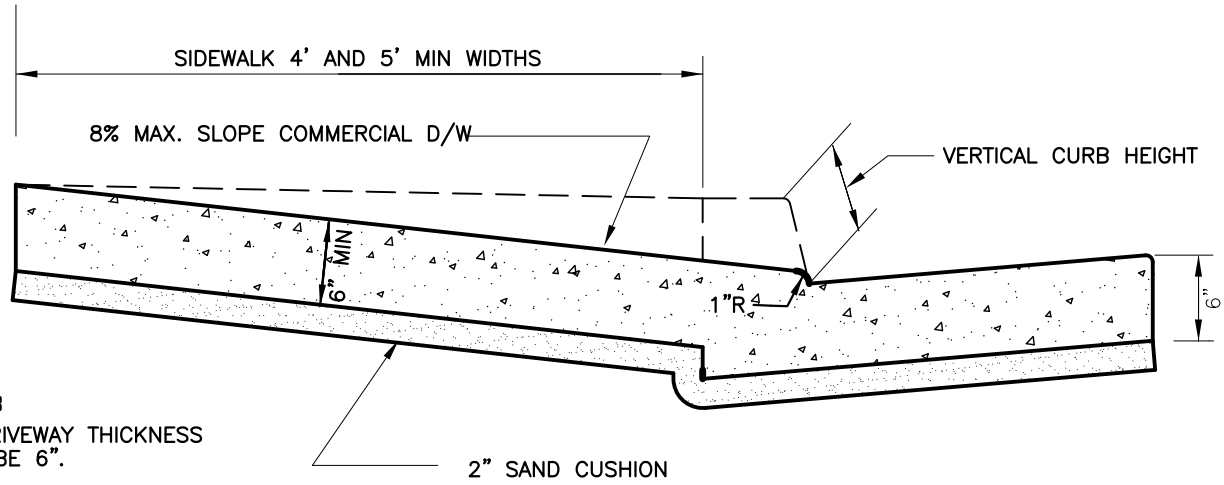

NOTES:

1. MIN. DRIVEWAY THICKNESS SHALL BE 6".
2. SHOULDER LENGTH 5' MIN FOR PARKING LOTS WITH MORE THAN 10 PARKING SPACES.

NOT TO SCALE

DRIVEWAY APPROACH SECTION
POUR APPROACH & GUTTER TOGETHER

Public Works Director

TEHAMA COUNTY STANDARD PLANS

REV. NO.	DATE:	BY		DATE 1/07
			STANDARD CONCRETE DRIVEWAY APPROACH	DWG. NO. 0928

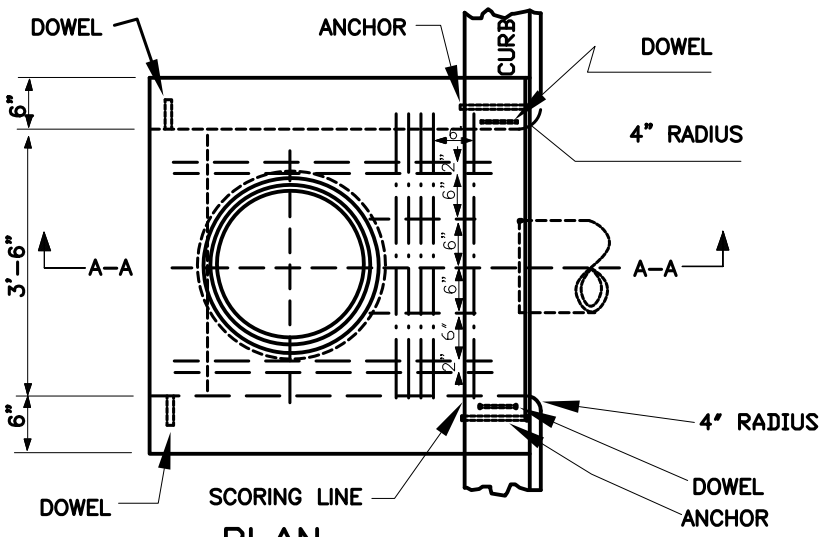

PLAN

STEEL LIST	
DESCRIPTION	REC'D
#3 BARS 4'-4" LONG	5
#3 BARS 3'-7" LONG	4
#3 BARS 1'-3" LONG	3
FACE PLATE, 4'-6" LONG	1
DOWELS, SEE DETAIL	4
FRAME AND COVER SET	1
PROTECTION BAR	NOTE 7

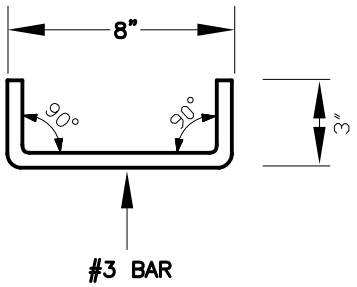

DOWEL DETAIL

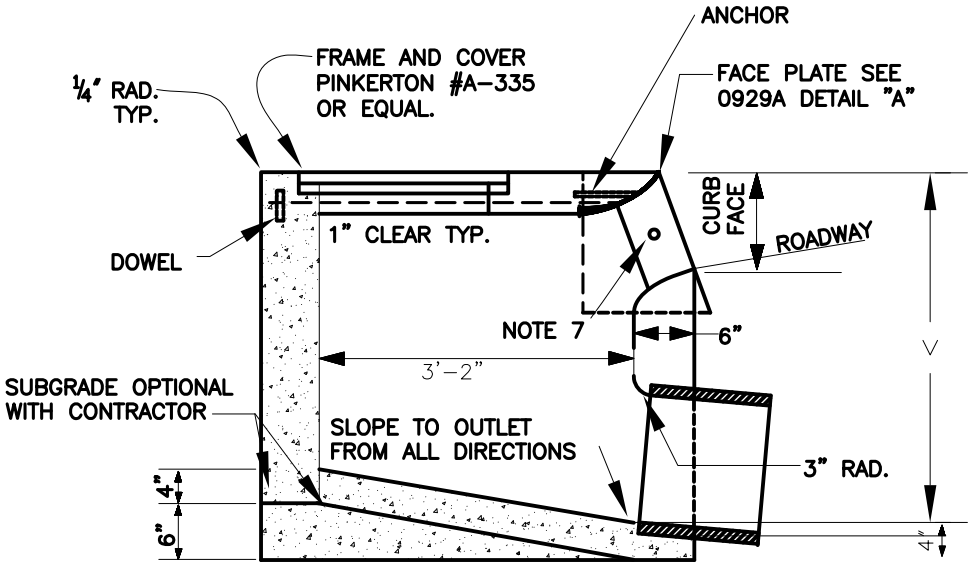

SECTION A-A

NOTES

1. CONNECTION PIPE AND OUTLET PIPE MAY BE PLACED IN ANY POSITION AROUND THE WALLS.
2. CURVATURE OF THE LIP AND SIDEWALLS AT THE GUTTER OPENING SHALL BE FORMED BY CURVED FORMS.
3. DIMENSIONS: V=3'-6" UNLESS OTHERWISE SPECIFIED.
4. FLOOR OF BASIN SHALL BE TROWELED TO A HARD, SMOOTH SURFACE AND SHALL SLOPE FROM ALL DIRECTIONS TO THE OUTLET.
5. MANHOLE SHALL BE PLACED ALONG THE BACK WALL.
6. OUTLET PIPE SHALL BE TRIMMED TO THE FINAL SHAPE AND LENGTH BEFORE CONCRETE IS POURED.
7. PROTECTION BAR: WHERE THE CURB FACE IS GREATER THAN 10", INSTALL PROTECTION BAR. SEE PLAN
8. SURFACE OF ALL EXPOSED CONCRETE SHALL CONFORM IN SLOPE, GRADE, COLOR, FINISH, AND SCORING TO EXISTING OR PROPOSED CURB AND WALK ADJACENT TO THE BASIN.

NOT TO SCALE

Public Works Director

TEHAMA COUNTY STANDARD PLANS

REV. NO.	DATE	BY		DATE
			CURB OPENING CATCH BASIN NO. 1	1/07
				DWG. NO.
				0929

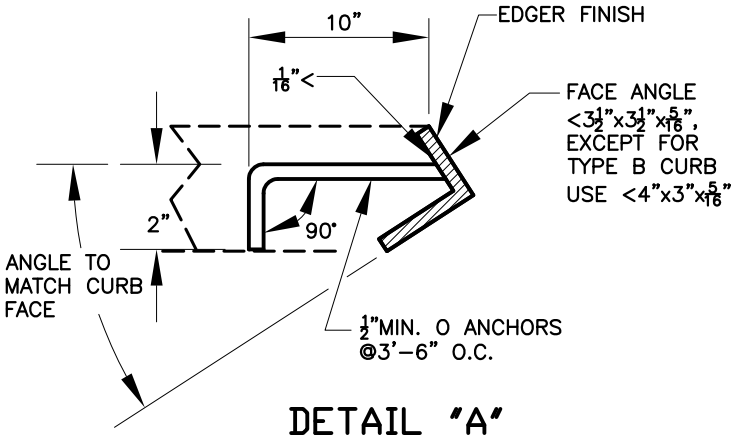

DETAIL "A"

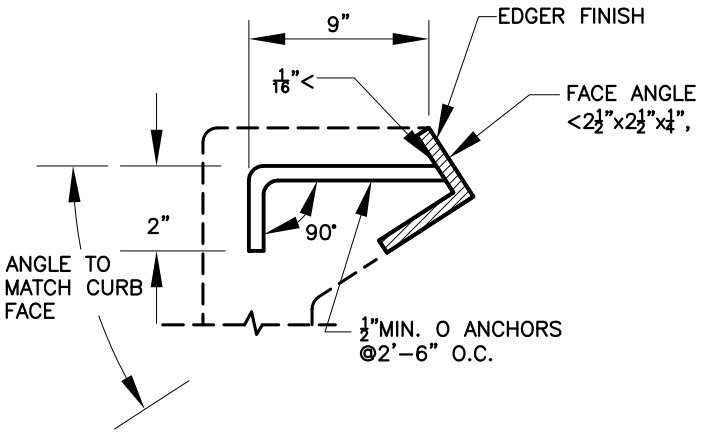

DETAIL "B"

Public Works Director

NOT TO SCALE

TEHAMA COUNTY STANDARD PLANS

REV. NO.	DATE	BY		DATE
			FACE ANGLE ANCHOR DETAILS	1/07
				DWG. NO.
				0929A

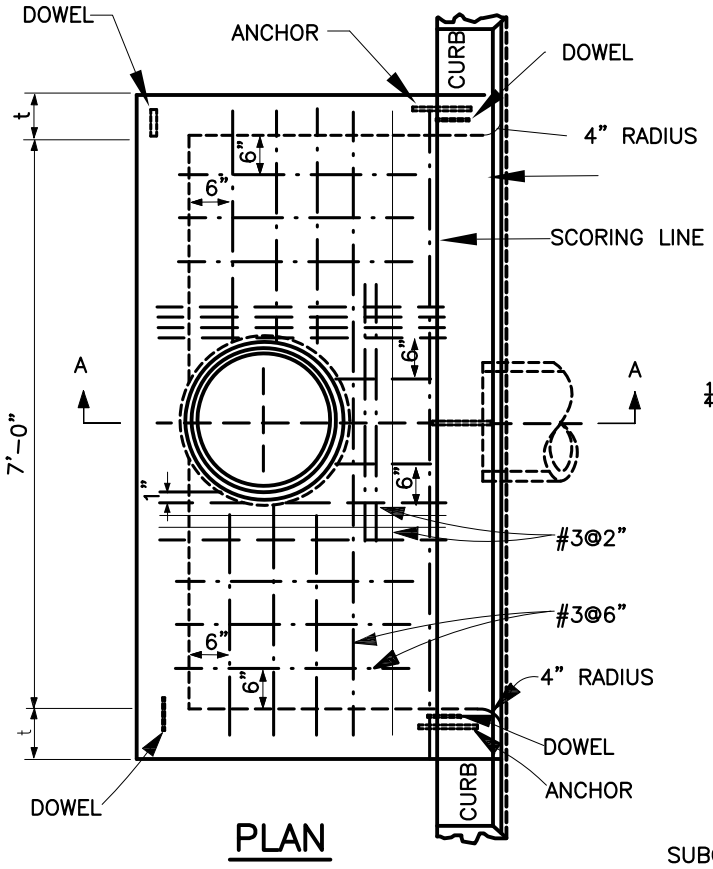

PLAN

STEEL LIST	
DESCRIPTION	REC'D
#3 BARS 7'-10" LONG	3
#3 BARS 3'-7" LONG	14
#3 BARS 3'-2" LONG	2
#3 BARS 2'-11" LONG	6
#3 BARS 1'-3" LONG	3
FACE PLATE, 8'-0" LONG	1
DOWELS, SEE DETAIL	4
FRAME AND COVER SET	1

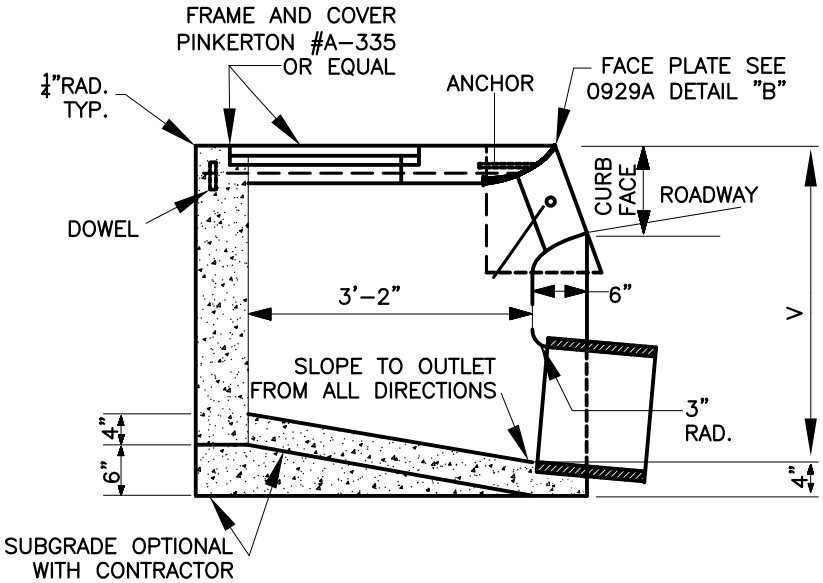

SECTION A-A

NOTES

1. CONNECTION PIPE AND OUTLET PIPE MAY BE PLACED IN ANY POSITION AROUND THE WALLS.
2. CURVATURE OF THE LIP AND SIDEWALLS AT THE GUTTER OPENING SHALL BE FORMED BY CURVED FORMS.
3. DIMENSIONS: t=6" IF V IS 4'-0" OR LESS
   t=8" IF V IS BETWEEN 4'-0" AND 8'-0"
   t=10" IF V IS 8'-0" OR MORE
   V=4'-0" UNLESS OTHERWISE SPECIFIED.
4. FLOOR OF BASIN SHALL BE TROWELED TO A HARD, SMOOTH SURFACE AND SHALL SLOPE FROM ALL DIRECTIONS TO THE OUTLET.
5. MANHOLE SHALL BE PLACED ALONG THE BACK WALL.
6. OUTLET PIPE SHALL BE TRIMMED TO THE FINAL SHAPE AND LENGTH BEFORE CONCRETE IS POURED.
7. SURFACE OF ALL EXPOSED CONCRETE SHALL CONFORM IN SLOPE, GRADE, COLOR, FINISH, AND SCORING TO EXISTING OR PROPOSED CURB AND WALK ADJACENT TO THE BASIN.
8. CURB FACE AT CATCH BASIN OPENING SHALL BE THAT OF THE EXISTING CURB PLUS 2" OR AS OTHERWISE SHOWN.

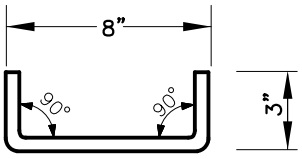

DOWEL DETAIL

Public Works Director

NOT TO SCALE

TEHAMA COUNTY STANDARD PLANS

REV. NO.	DATE	BY		DATE
			CURB OPENING CATCH BASIN NO. 2	1/07
				DWG. NO. 0930

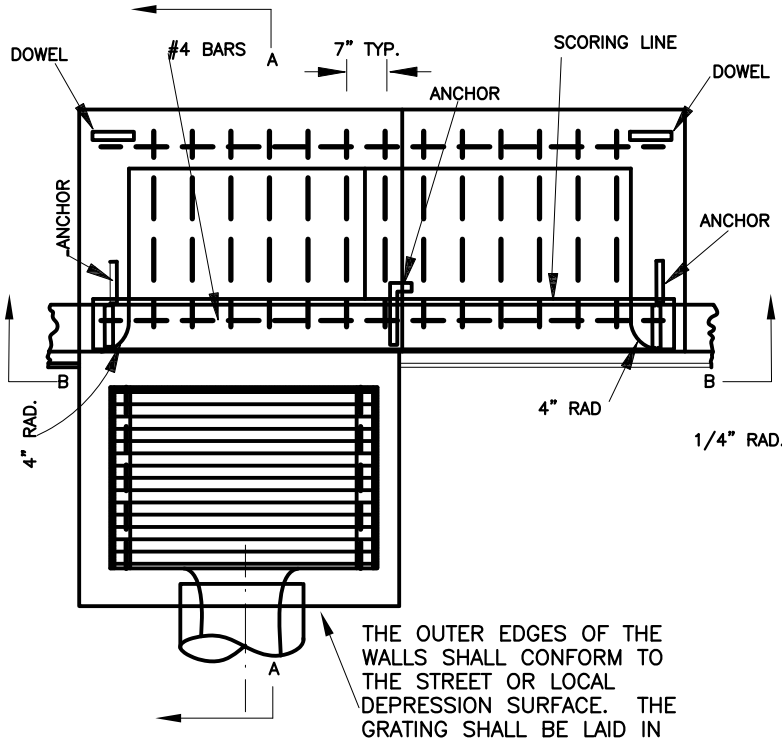

PLAN

STEEL LIST		
DESCRIPTION	NO. REQ'D	
LENGTH OF BASIN, W=	14'	7'
#4 BARS 2'–3' LONG	24	12
#4 BARS 7'–9' LONG	0	2
#4 BARS 14'–9" LONG	2	0
FACE PLACE, PLAN	1	1
DOWELS	4	4
PROTECTION BAR	NOTE 6	

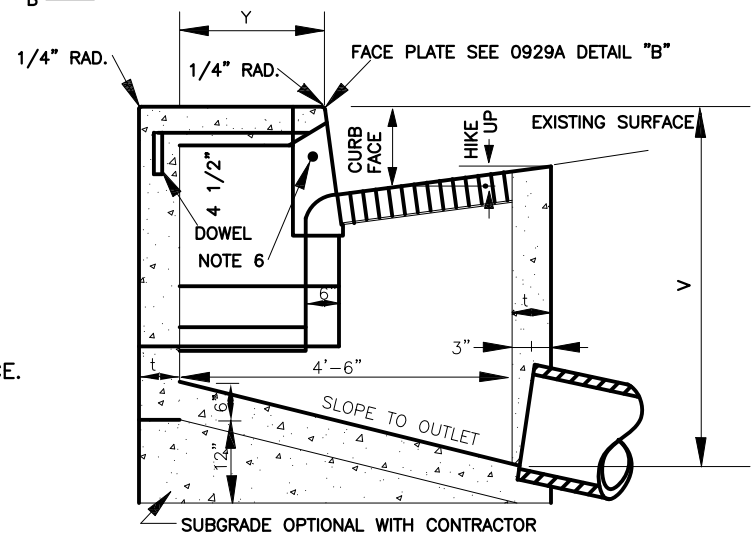

SECTION A–A

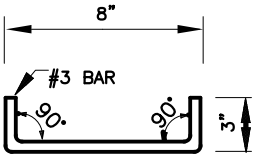

DOWEL DETAIL

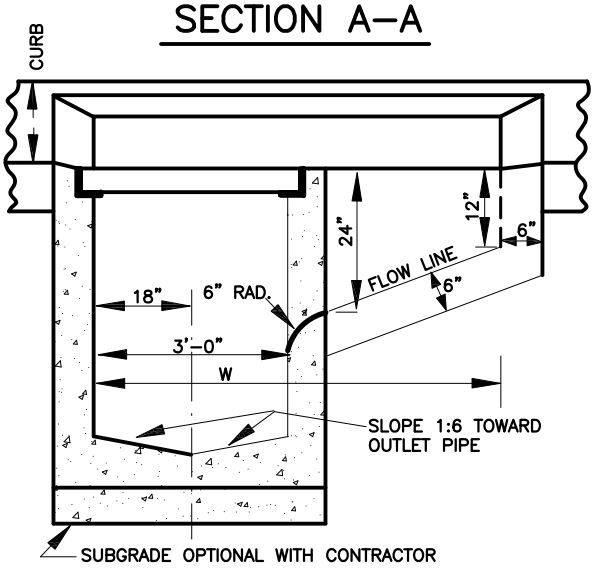

SECTION B–B

NOTES:

1. CONNECTION PIPES MAY BE PLACED IN ANY POSITION AROUND THE WALLS PROVIDED THE POSITION IS CONSISTENT WITH THE IMPROVEMENT PLAN. CURVATURE OF THE LIP AND SIDEWALLS AT GUTTER
2. OPENING SHALL BE FORMED BY CURVED FORMS DIMENSIONS:
   Y = VARIABLE (APPROX 2'–3")
3. t = 6" IF V = 5' OR LESS
   t = 8" IF V IS GREATER THAN 5'
   V = 4'–6" UNLESS OTHERWISE SPECIFIED
   W = 7' UNLESS OTHERWISE SPECIFIED
4. FLOOR OF BASIN SHALL BE TROWELLED TO A HARD SMOOTH SURFACE AND SHALL SLOPE FROM ALL DIRECTIONS TO OUTLET
5. OUTLET PIPE SHALL BE TRIMMED TO THE FINAL SHAPE AND LENGTH BEFORE CONCRETE IS POURED.
6. PROTECTION BAR: WHERE CURB FACE IS GREATER THAN 10", INSTALL PROTECTION BAR, PLAN
7. REINFORCING STEEL SHALL HAVE L" CLEARANCE FROM BOTTOM OF SLAB.
8. SURFACE OF ALL EXPOSED CONCRETE IN BASIN SHALL CONFORM IN SLOPE, GRADE, COLOR, FINISH, AND SCORING TO EXISTING OR PROPOSED CURB AND WALK ADJACENT TO THE BASIN.

NOT TO SCALE

Public Works Director

TEHAMA COUNTY STANDARD PLANS

REV. NO.	DATE	BY		DATE
			CATCH BASIN NO.3	1/07
				DWG. NO.
				0931

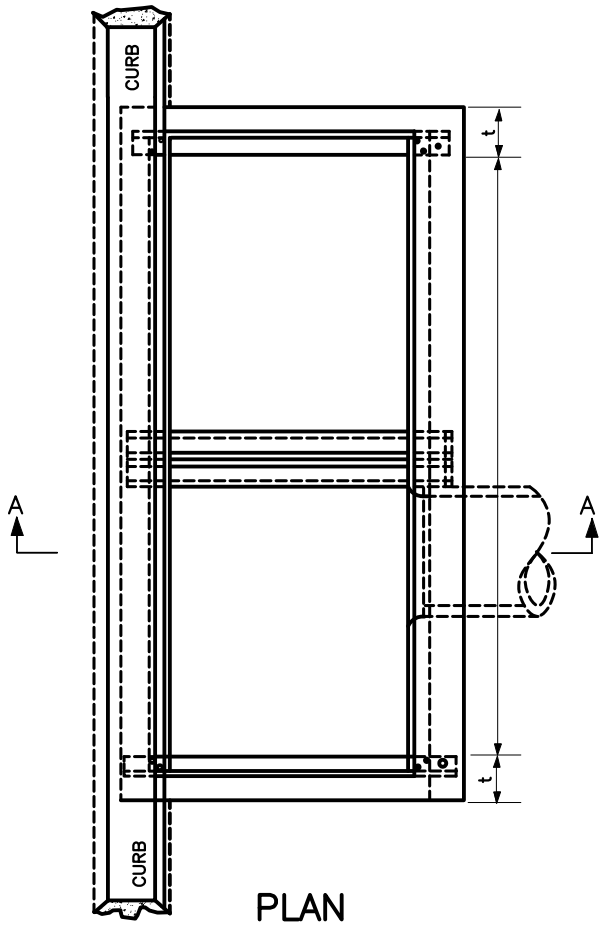

PLAN

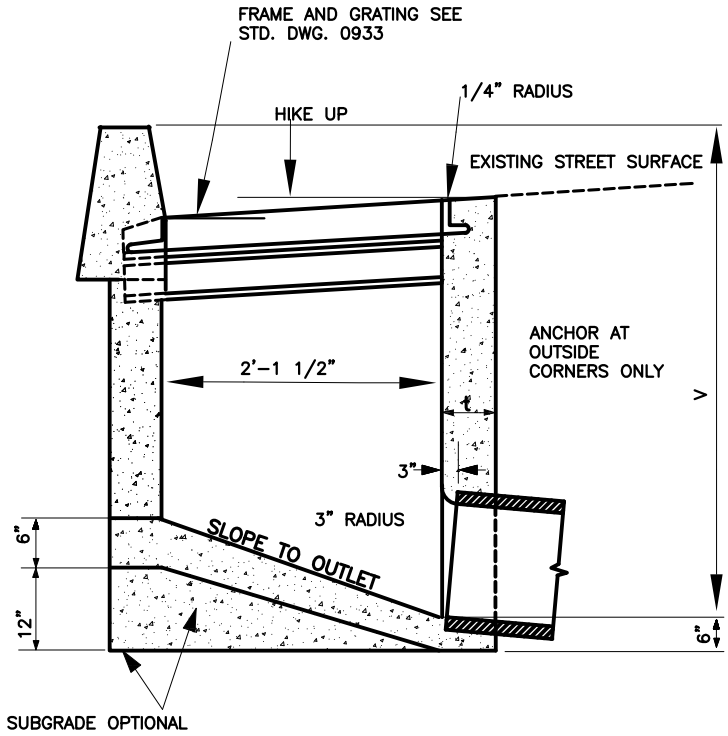

SECTION A–A

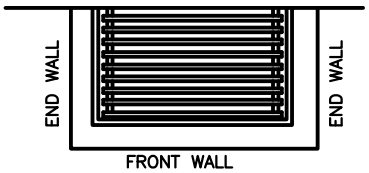

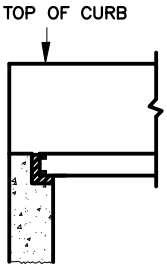

DETAIL OF END WALL

NOTES

1. BASIN SHALL HAVE ONE GRATING UNLESS OTHERWISE SPECIFIED.
2. CONNECTION PIPES MAY BE PLACED IN ANY POSITION AROUND THE WALLS.
3. CURB (EITHER STANDARD OR DEPRESSED)
4. REINFORCING, NONE REQUIRED.
5. DIMENSIONS:
   tHE GRATING SHALL BE LAID IN THE PLANE OF THE EXISTING STREET SURFACE AND THE OUTER EDGES OF WALLS SHALL CONFORM TO THAT SURFACE.
   THE CURB FACE SHALL EQUAL THAT OF THE EXISTING CURB WHEN NOT USED WITH L.D.
   t=6" IF V IS 4'–0" OR LESS
   t=8" IF V IS BETWEEN 4'–0" AND 8'–0"
   t=10" IF V IS 8'–0" OR MORE
   V=3'–6" UNLESS OTHERWISE SPECIFIED.
   W=2'–11 3/8" FOR L GRATING. ADD 3'–5 3/8" FOR EACH ADDITIONAL GRATING.
6. FLOOR OF BASIN SHALL BE TROWELED TO A HARD, SMOOTH
7. SURFACE AND SHALL SLOPE FROM ALL DIRECTIONS TO THE OUTLET.
8. SURFACE OF CURB SHALL CONFORM IN SLOPE, GRADE, COLOR, FINISH AND SCORING TO ADJACENT CURB.
   OUTLET PIPE SHALL BE TRIMMED TO THE FINAL SHAPE AND LENGTH BEFORE CONCRETE IS POURED.

NOT TO SCALE

Public Works Director

TEHAMA COUNTY STANDARD PLANS

REV. NO.	DATE	BY		DATE
			GRATED CURB OPENING CATCH BASIN NO. 4	1/07
				DWG. NO.
				0932

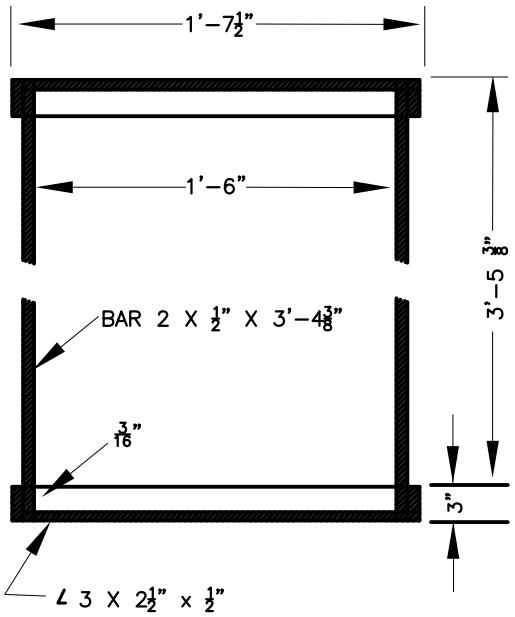

TYPICAL FRAME

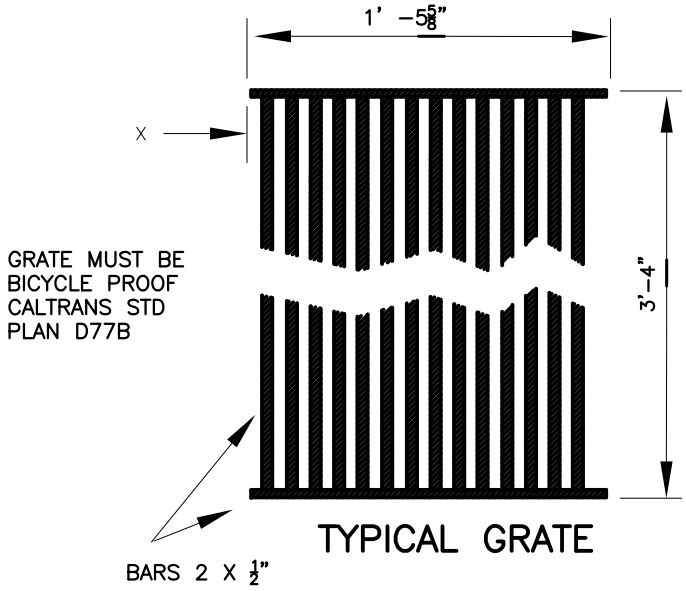

TYPICAL GRATE

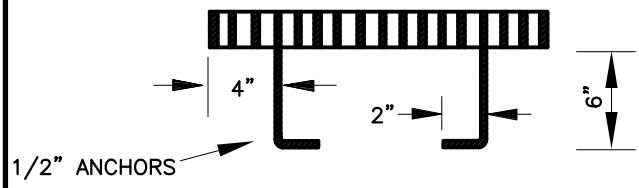

CROSS SECTION
(THRU FRAME AND GRATE)

CROSS SECTION
(THRU FRAME AND GRATE)

RECTANGULAR FRAME DETAILS

NOTES:

1. CONTRACTOR HAS THE OPTION OF USING CAST NODULAR IRON, CAST STEEL, WELDED, BOLTED, OR CAST END BLOCK GRATE.
2. GRATED AND FRAMES MAY BE GALVANIZED OR SANDBLASTED AND PAINTED WITH ONE COAT ZINC CHROMATE (STATE 681-80-51) AND ONE COAT ALUMINUM (STATE 681-80-80)
3. FULL PENETRATION BUTT WELDS MAY BE SUBSTITUTED FOR THE FILLET WELDS ON ALL ANCHORS.
4. STANDARD SQUARE, HEXAGON, ROUND, OR EQUILAVENT HEADED ANCHORS MAY BE SUBSTITUTED FOR THE RIGHT ANGLE HOOKS ON THE ANCHORS SHOWN ON THIS PLAN.

NOT TO SCALE

Public Works Director

TEHAMA COUNTY STANDARD PLANS

REV. NO.	DATE:	BY		DATE 1/07
			GRATE DETAIL	DWG. NO. 0933

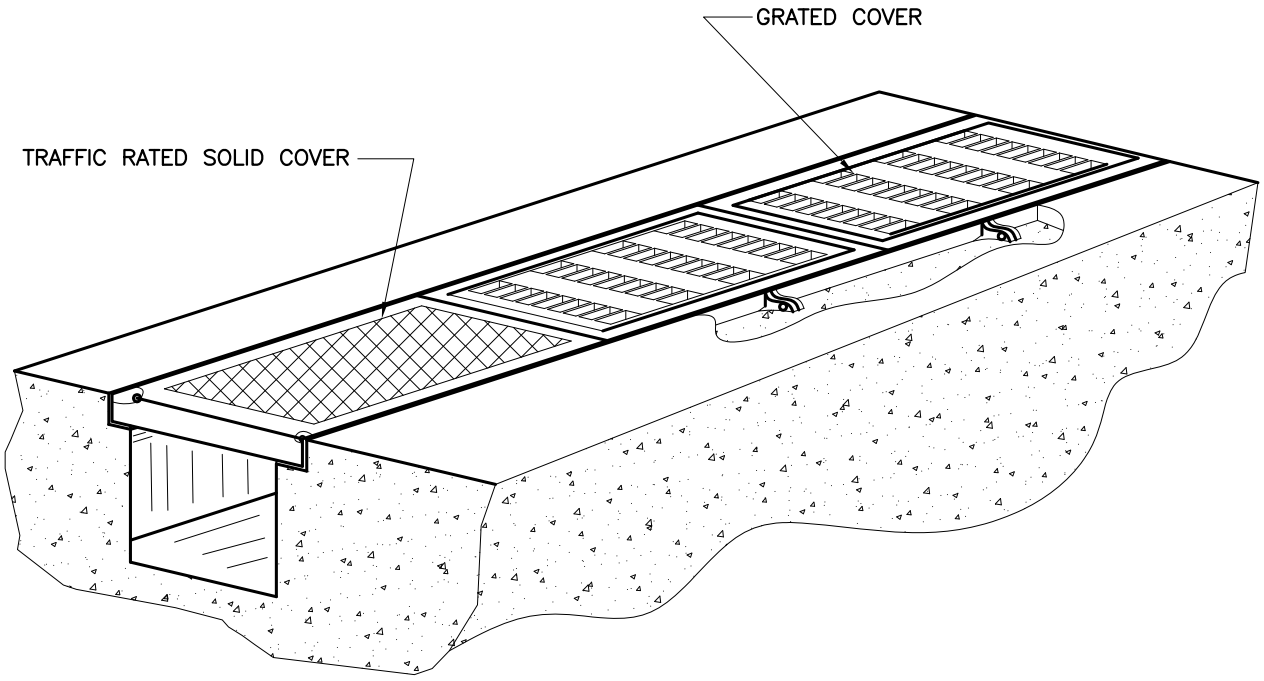

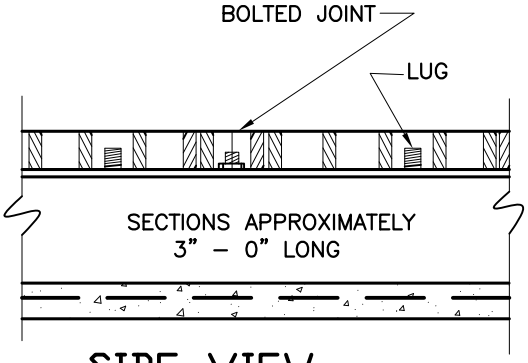

SIDE VIEW

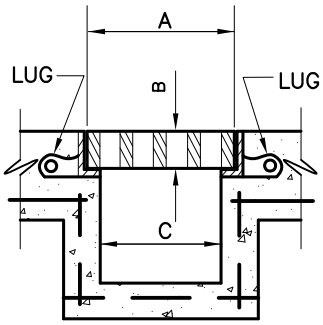

END VIEW

DIMENSIONS IN INCHES		
A	B	C
8	1 3/4	6
10	1 3/4	8
12	2	10
14	2	12

NOTES:

1. TRENCH DETAILS AND SIZE OF FRAME, WITH GRATE OR COVER WILL BE SPECIFIED ON PLANS.
2. SHALL COMPLY W/ SOUTH BAY FOUNDRY C 50 TRAFFIC BIKEPROOF OR EQUAL.

Public Works Director

NOT TO SCALE

TEHAMA COUNTY STANDARD PLANS

REV. NO.	DATE:	BY	CONCRETE TRENCH COVER FOR STREETS & SIDEWALKS	DATE 1/07
				DWG. NO. 0934

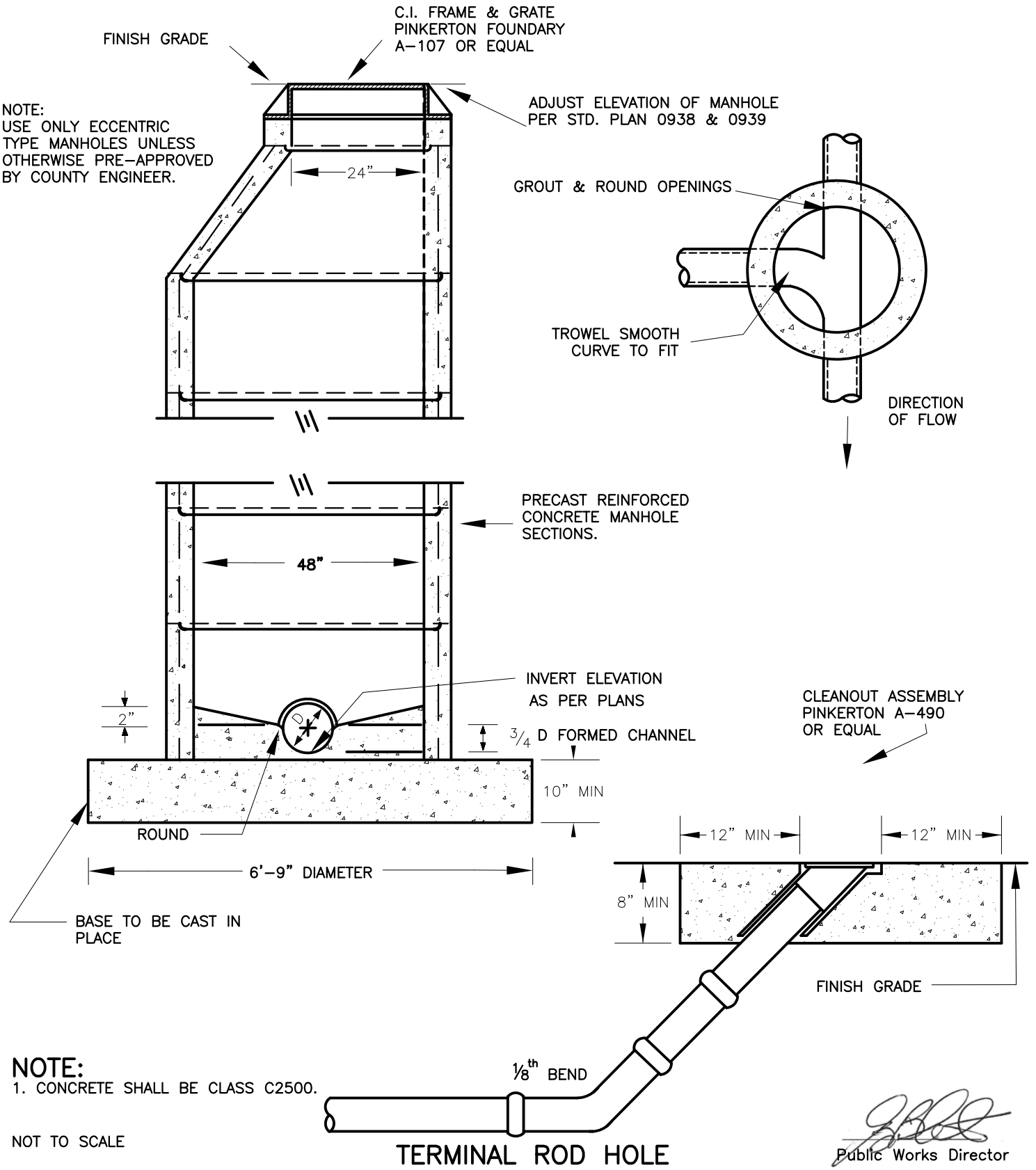

NOTE:
USE ONLY ECCENTRIC TYPE MANHOLES UNLESS OTHERWISE PRE-APPROVED BY COUNTY ENGINEER.

NOTE:
1. CONCRETE SHALL BE CLASS C2500.

NOT TO SCALE

Public Works Director

TEHAMA COUNTY STANDARD PLANS

REV. NO.	DATE	BY		DATE
			MANHOLE AND CLEANOUT FOR PIPE SIZES 6" – 24"	1/07
				DWG. NO. 0935

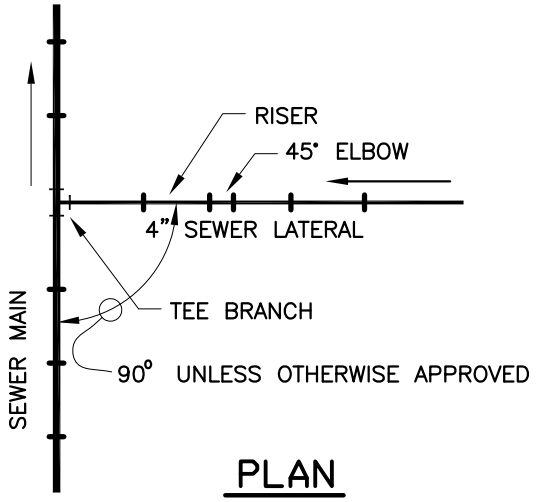

PLAN

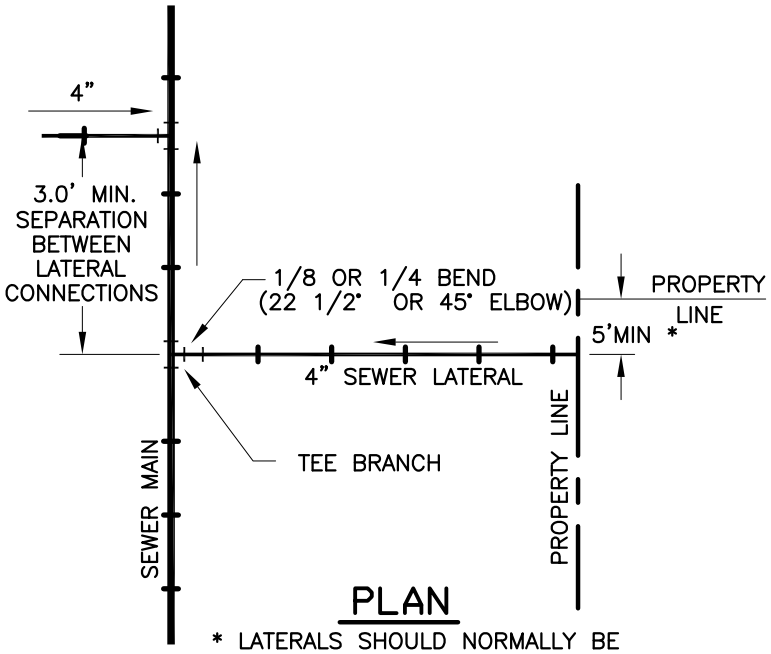

PLAN

* LATERALS SHOULD NORMALLY BE PLACED NEAR CENTER OF LOT, BUT MAY BE AS CLOSE TO PROPERTY LINE AS 5' WHEN NEEDED FOR GRADE. KEEP 10' MIN FROM WATER SERVICE.

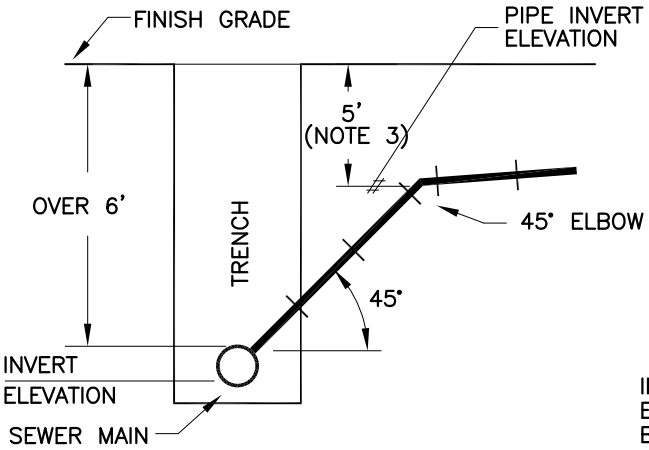

ELEVATION

TYP. HOUSE CONNECTION RISER

WHEN COVER OVER 6'

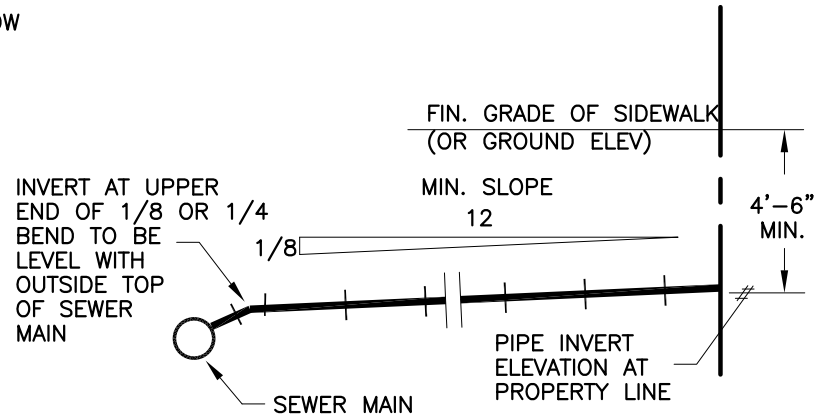

ELEVATION PLAN

NOTES:

1. 90° TAPS ARE ACCEPTABLE.
2. RISERS SHALL BE INSTALLED WHEN DEPTH OF SEWER EXCEEDS 6 FT.
3. VERTICAL INSTALLATIONS (STOVEPIPING) WILL NOT BE ALLOWED.
4. WHERE MAIN IS IN AN EASEMENT, INSTALL A TEE, PIPE BRANCH TO PROPERTY LINE, CLEANOUT AND PLUG.
5. BACKFILL FOR SERVICE CONNECTION PIPE SHALL BE THE CLASS APPROPRIATE FOR THE SERVICE CONNECTION PIPE LOCATION.
6. SERVICE CONNECTIONS ARE 4" DIAMETER PIPE UNLESS OTHERWISE NOTED.

Public Works Director

NOT TO SCALE

TEHAMA COUNTY STANDARD PLANS

REV. NO.	DATE:	BY	TYPICAL SEWER HOUSE CONNECTION	DATE 1/07
				DWG. NO. 0936

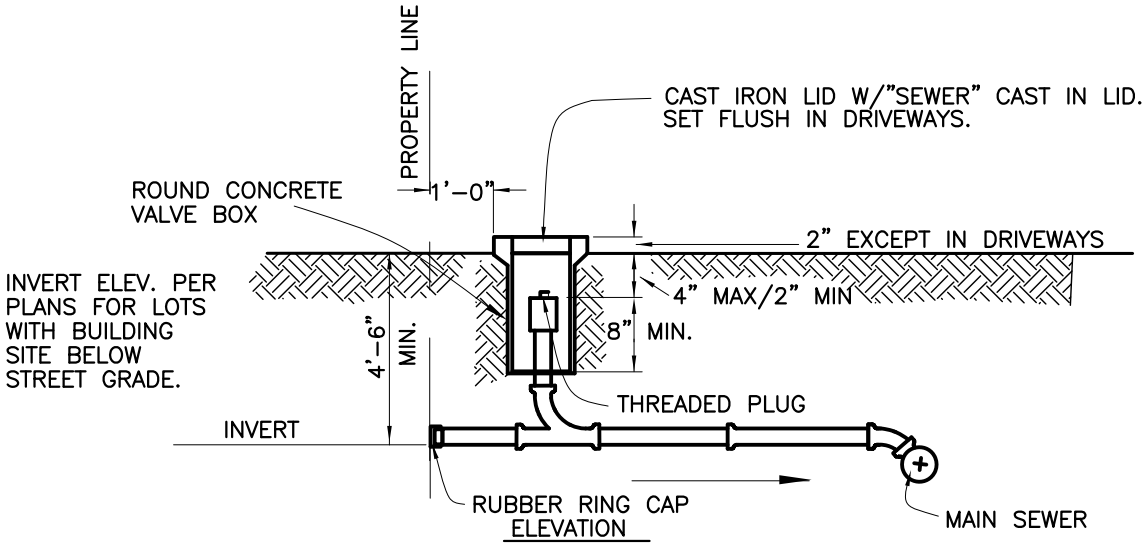

SEWER LATERAL CLEANOUT

Public Works Director

NOT TO SCALE

TEHAMA COUNTY STANDARD PLANS

REV. NO.	DATE:	BY		DATE
			SEWER LATERAL CLEANOUT	1/07
				DWG. NO.
				0937

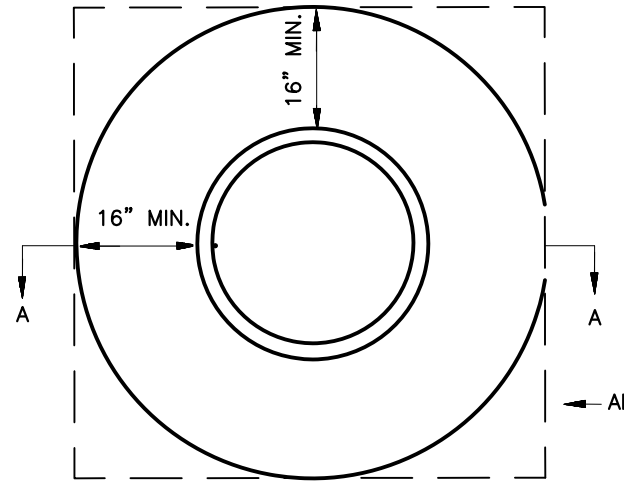

PLAN

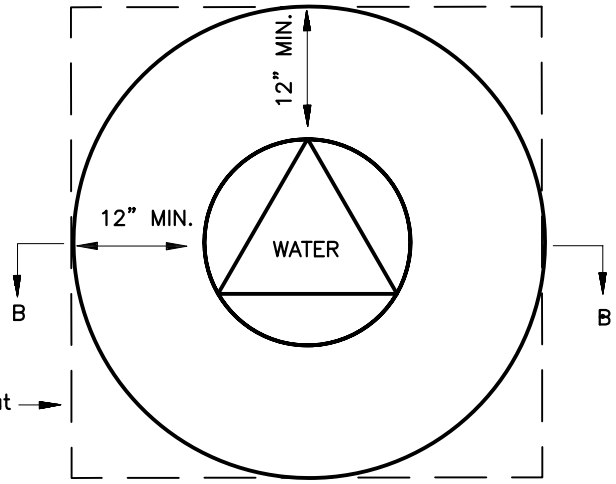

PLAN

Alternate Cut

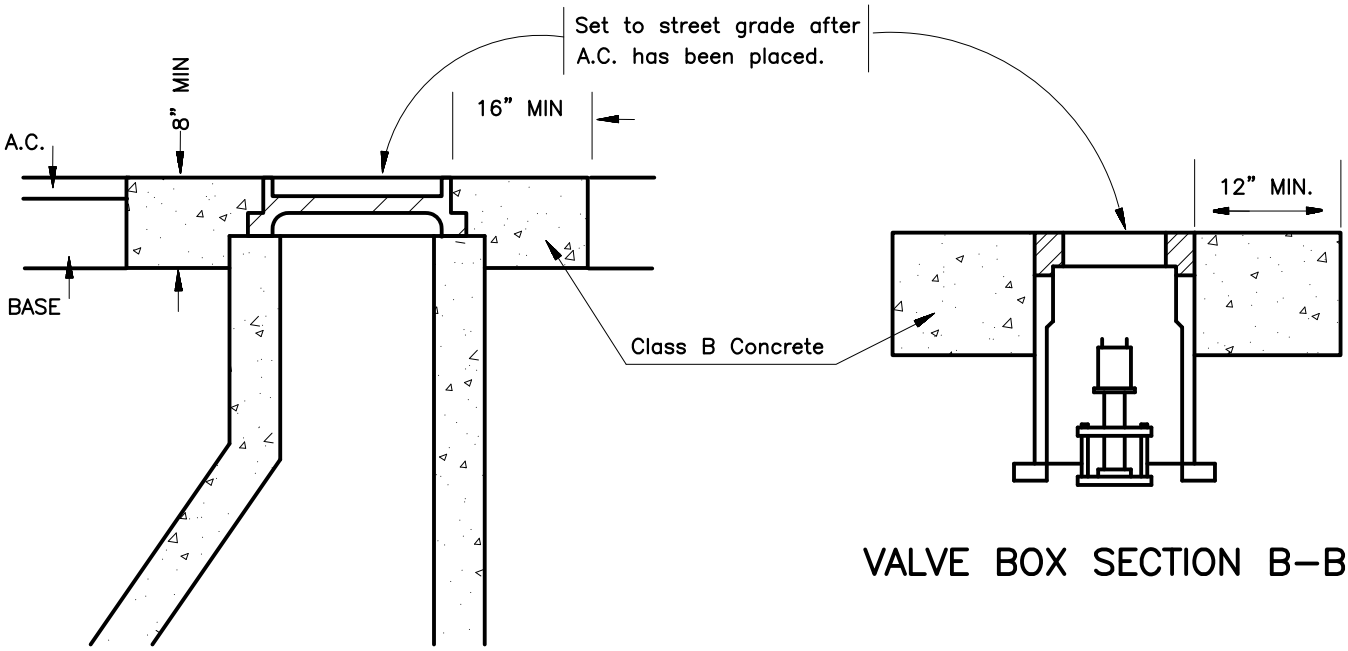

VALVE BOX SECTION B–B

ECCENTRIC MANHOLE SECTION A–A

NOTES:

1. USE 12" MIN COLLAR ON SANITARY SEWER RODHOLE
2. CONSTRUCT CONCRETE COLLAR SQUARE OR CIRCULAR
3. VALVE BOX SHALL BE BROOKS PRODUCTS No 4–?? OR EQUAL
4. MANHOLE FRAME AND COVER SHALL BE PINKERTON No. A–107 OR EQUAL
5. RODHOLE FRAME AND COVER SHALL BEPINKERTON No. A–490 OR EQUAL

Public Works Director

NOT TO SCALE

TEHAMA COUNTY STANDARD PLANS

REV. NO.	DATE:	BY		DATE
			MANHOLE–VALVE BOX ADJUSTMENT TO FINISHED GRADE	01/07
				DWG. NO.
				0938

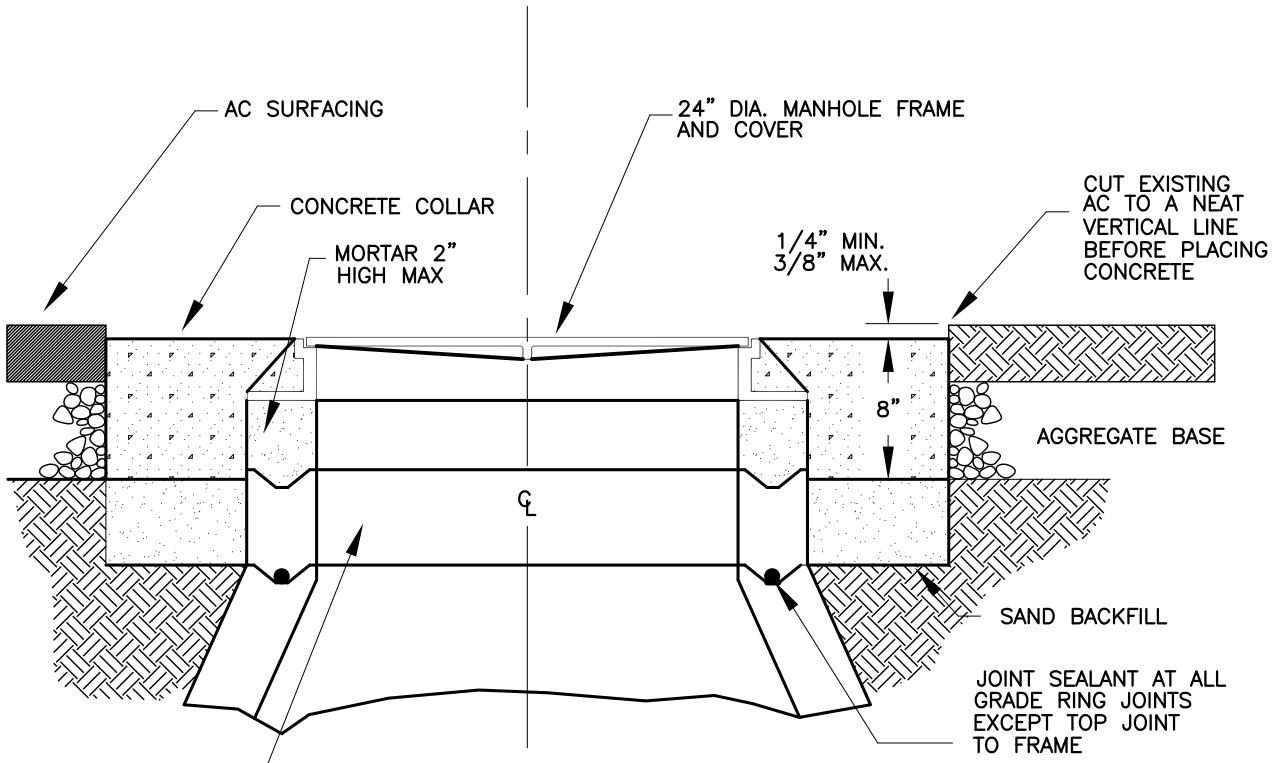

PAVED STREET SECTION DETAIL

TO BE USED IN PAVED STREET SECTIONS

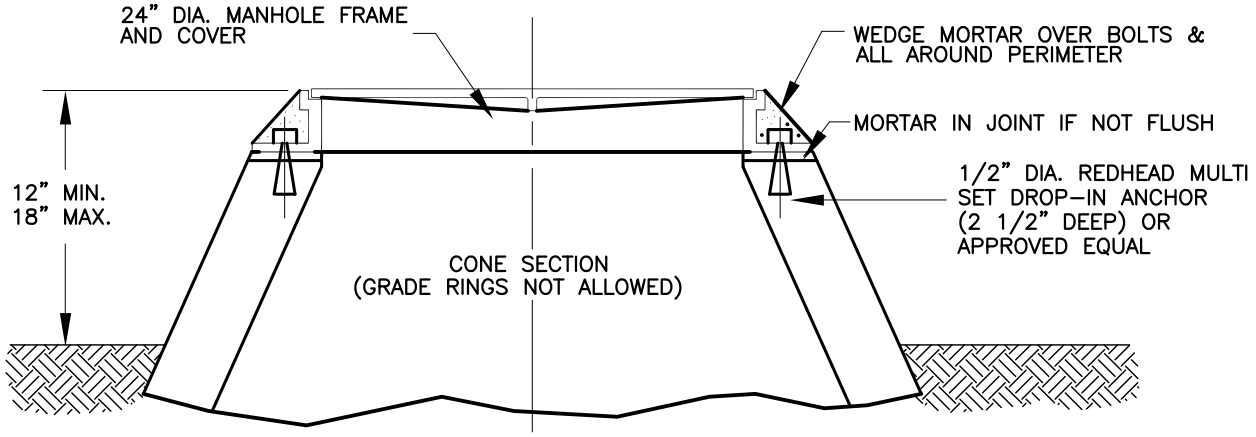

UNIMPROVED SECTION DETAIL

TO BE USED IN UNIMPROVED AREAS
(SHOWING REQUIRED FRAME ASSEMBLY ANCHORAGE)

NOTE:

WHEN MANHOLES ARE IN SHOULDERS, THE SHOULDER SHALL BE PAVED TO EXTEND STREET GRADE WITH TAPPERED FLARES TO CONC COLLAR EXTENDING 20' ON EACH SIDE OF MANHOLE AND A MINIMUM OF 1' FROM THE MANHOLE LID.

NOT TO SCALE

Public Works Director

TEHAMA COUNTY STANDARD PLANS

REV. NO.	DATE	BY		DATE
			MANHOLE ADJUSTMENT AND ANCHORAGE DETAILS	1/07
				DWG. NO.
				0939

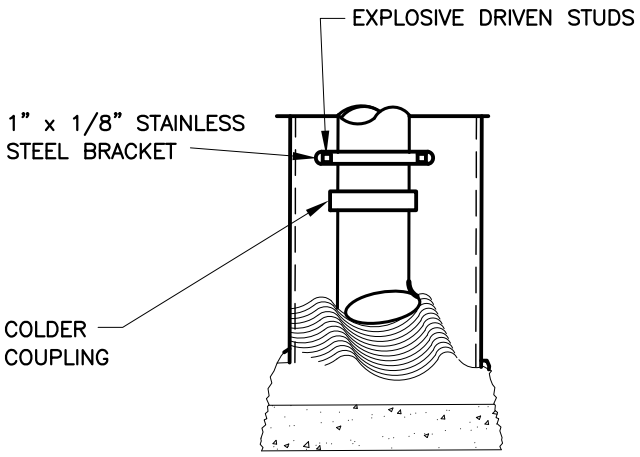

SECTION D–D

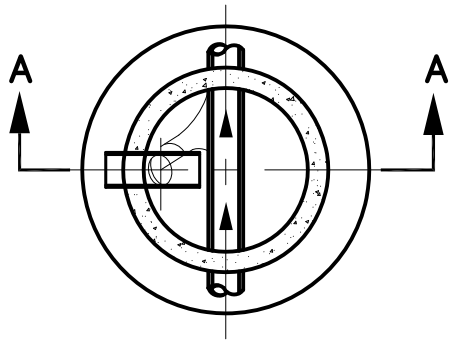

SECTION B–B

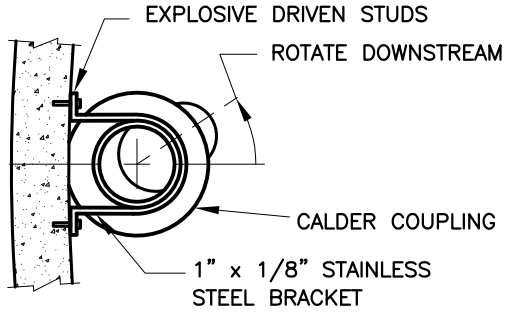

SECTION C–C

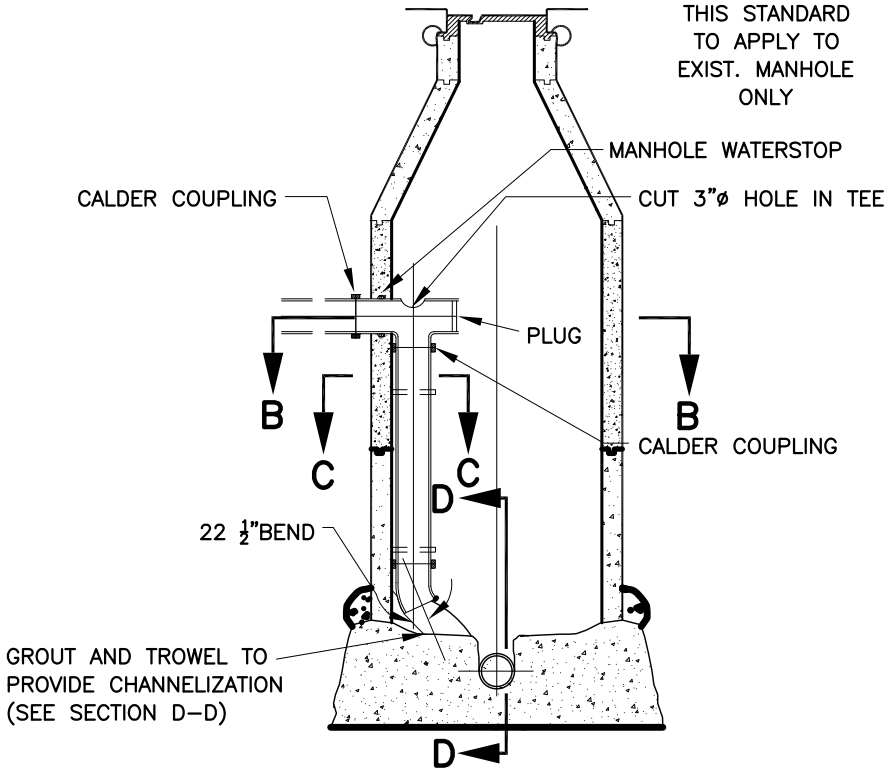

SECTION A–A

NOTES:

1. INSIDE DROP MANHOLES ALLOWED WHEN THE GRADE DIFFERENCE IS 6' OR MORE ON EXISTING FACILITIES OR WHEN DIRECTED BY THE ENGINEER.
2. THIS TYPE DROP MANHOLE CONSTRUCTION MAY BE UTILIZED ONLY WHEN 8" OR SMALLER PIPE IS USED.
3. VERTICAL PIPE SHALL BE 6" FOR BOTH 6" AND 8" INCOMING LINES. 4" VERTICAL PIPE MAY BE USED FROM 4" INCOMING LINES.
4. CAST IRON SOIL PIPE SHALL BE USED IN THE DROP SECTION OF THE MANHOLE. USE NO HUB TEES.
5. A CALDER COUPLING OR EQUAL SHALL BE USED ON THE JOINT IMMEDIATELY OUTSIDE THE MANHOLE.
6. A MINIMUM OF ONE STAINLESS STEEL BRACKET PER JOINT OF PIPE SHALL BE USED. A MINIMUM OF TWO BRACKETS SHALL BE USED PER MANHOLE INSTALLATION.

Public Works Director

NOT TO SCALE

TEHAMA COUNTY STANDARD PLANS

REV. NO.	DATE	BY		DATE
			STANDARD INSIDE DROP MANHOLE	1/07
				DWG. NO. 0940

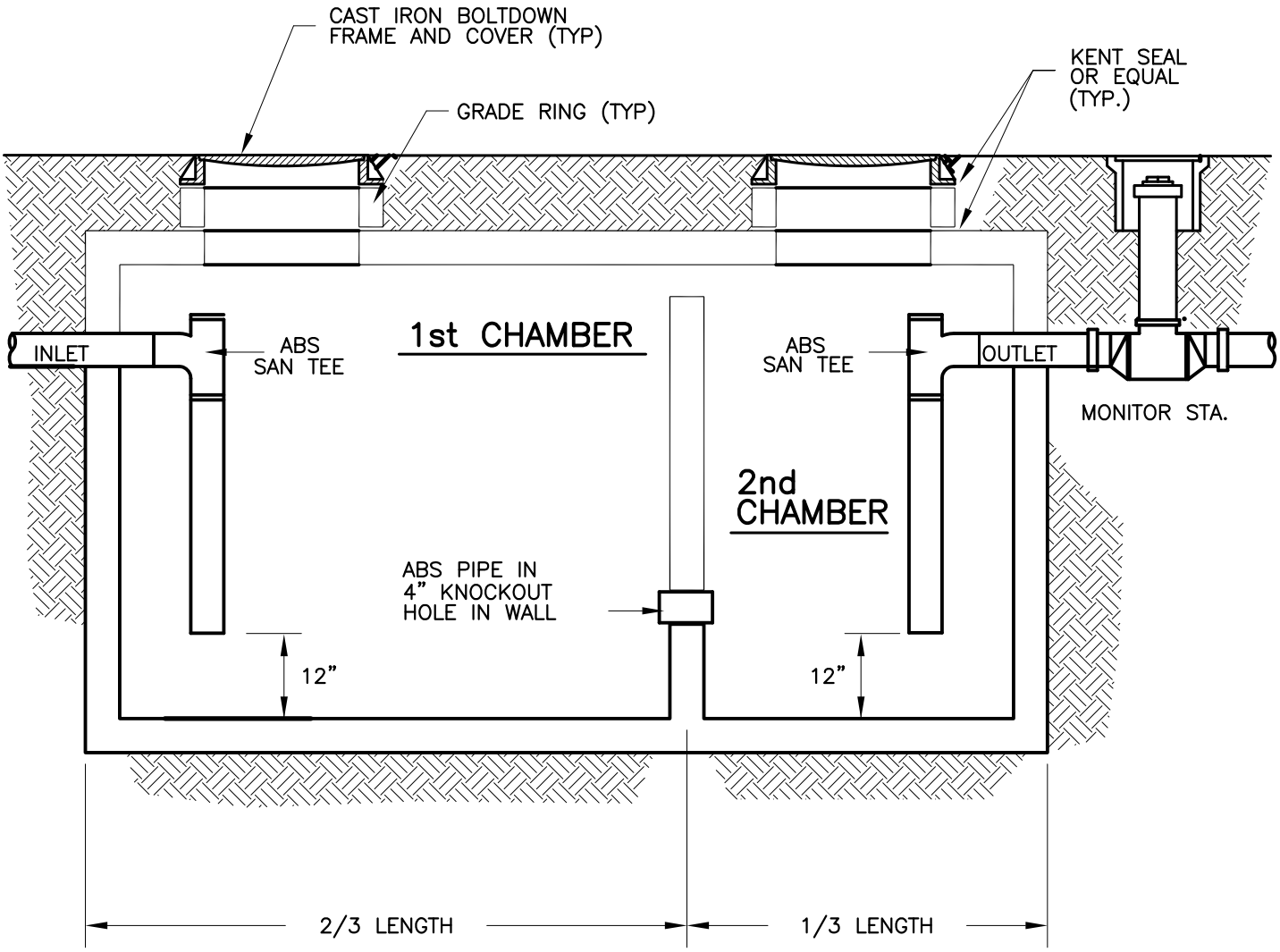

NOT TO SCALE

Public Works Director

TEHAMA COUNTY STANDARD PLANS

REV. NO.	DATE	BY		DATE
			OIL & GREASE OR SAND & OIL INTERCEPTOR	1/07
				DWG. NO.
				0941

TEHAMA COUNTY SERVICE AREA

OIL & GREASE INTERCEPTORS (OGI)

REQUIREMENT:

Oil and Grease Interceptors are required for all industrial and for commercial food establishments where pretreatment of wastewater effluent is indicated as necessary to capture greases, oils, or food solids.

This standard applies to all new construction, tenant improvements, remodels, and existing systems which are in need of upgrading.

OGI's will be sized from industry submitted, certified food preparation facility survey information. The sizing criteria will follow the Uniform Plumbing Code (UPC) appendix H. The interceptor size (in gallons) will be established by the formula below.

SIZING CRITERIA:

(a) Parameters; The parameters for sizing a grease interceptor are hydraulic loading and grease storage capacity, for one or more fixtures.

(b) Sizing Formula; The size of the interceptor shall be determined by the following formula:

Number of meals X waste flow X retention X storage = interceptor size
per peak hour* rate** time*** factor**** (liquid capacity)

* Meals Served at Peak Hour (or),
Total Seating Capacity

** Waste Flow Rate:

a.	With dishwashing machine	6 gallon flow
b.	Without dishwashing machine	5 gallon flow
c.	Single service kitchen	2 gallon flow
d.	Food waste disposer	1 gallon flow

*** Retention Times

Commercial kitchen waste dishwasher	2.5 hours
Single service kitchen single serving	1.5 hours

**** Storage Factors

Fully equipped commercial kitchen	8 hour operation : 1 16 hour operation: 2 24 hour operation: 3
Single Service Kitchen	1.5

Public Works Director

TEHAMA COUNTY STANDARD PLANS

REV. NO.	DATE:	BY	OIL & GREASE (OGI) INTERCEPTOR SIZING	DATE 1/07
				DWG. NO. 0941a

The minimum size OGI allowed by the County is 1250 gallons. For very large OGI requirements the maximum size required will be established on a case by case basis. Adjustments for extenuating circumstances will include establishment of an agreed upon OGI maintenance (pumping) schedule, between the facility owner\ operator and the County.

DESIGN

All new construction and upgrades, having an OGI requirement, shall be constructed to include a sample monitoring station.

Facilities required to install OGI's and/or sample monitoring stations, shall install units of approved designs on file with the County Construction Standards.

If an existing undersized unit is structurally sound and installed properly, then, in lieu of replacing it with a larger unit, the owner may choose to install an additional unit in series with the existing unit to satisfy the total size capacity required.

All required OGI's shall be installed and properly maintained with all internal required plumbing of proper design and length in place at all times.

Public Works Director

TEHAMA COUNTY STANDARD PLANS

REV. NO.	DATE:	BY		
			OIL & GREASE (OGI) INTERCEPTOR SIZING	DATE 1/07
				DWG. NO. 0941b

TEHAMA COUNTY SERVICE AREA

SAND AND OIL INTERCEPTORS (SOI)

REQUIREMENT:

Sand and Oil Interceptors are required for industrial and commercial establishments where pretreatment of wastewater effluent is necessary to capture solids (sand, silts etc.) or floatables (oils etc.).

This standard applies to all new construction, tenant improvements, remodels, and existing systems which are in need of upgrading.

SOI's will be sized from industry submitted, certified Industrial Waste Survey information or by County field inspection data. The sizing criteria will follow the Uniform Plumbing Code (UPC) appendix I–9. The UPC does not specify requirements for all specific applications; however, The basic formula may be easily adapted to differing applications or parameters.

SIZING CRITERIA:

(a) Parameters; The parameters for sizing the SOI units are hydraulic loading, retention time, and storage factor for one or more fixtures or industrial applications.

(b) Sizing Formula; The size of the SOI will be determined by use of the following formula:

Number of units X waste flow X retention X storage = interceptor size
washed per hour* rate** time*** factor**** (liquid capacity)

* NUMBER of units washed per hour (ie.,auto's, engines, parts, etc.)

** Waste Flow Rate – gallons per unit cleaned (for intermittent use), or gallons per hour (for constant use)

*** Retention Times 2.0 hours

**** Storage Factors – vehicle/equipment/parts, etc. washing

a.	Self service/public	1.5 hours
b.	Employee operated automated/commercial	2.0 hours
c.	Other industrial/commercial applications	2.0 hours

The minimum size SOI allowed by the County is 100 gallons. Adjustments for extenuating circumstances will include establishment of an agreed upon SOI maintenance (pumping) schedule, between the facility owner/operator and the County.

Public Works Director

TEHAMA COUNTY STANDARD PLANS

REV. NO.	DATE:	BY	SAND & OIL (SOI) INTERCEPTORS SIZING	DATE 01/07
				DWG. NO. 0941c

DESIGN

All new construction and upgrades, where SOI's are required, such units shall be constructed to include a sample monitoring station.

Facilities required to install SOI's and/or sample monitoring stations, shall install units of approved designs on file with the County Construction Standards. The use of auxiliary or alternate pretreatment systems in conjunction with or in lieu of an SOI unit must be approved by the County prior to installation.

If an existing undersized unit is structurally sound and installed properly, then, in lieu of replacing it with a larger unit, the owner may choose to install an additional unit in series with the existing unit to satisfy the total size capacity required.

The standard SOI drawing (Figure 15–20) applies to units of 100 through 1,500 gallon capacity. Units over 1,500 gallon capacity must have at least 3 compartments.

All required SOI's shall be installed and properly maintained with all internal required plumbing of proper design and length in place at all times.

Public Works Director

TEHAMA COUNTY STANDARD PLANS

REV. NO.	DATE:	BY		DATE 1/07
			SAND AND OIL (SOI) INTERCEPTORS SIZING	DWG. NO. 0941d

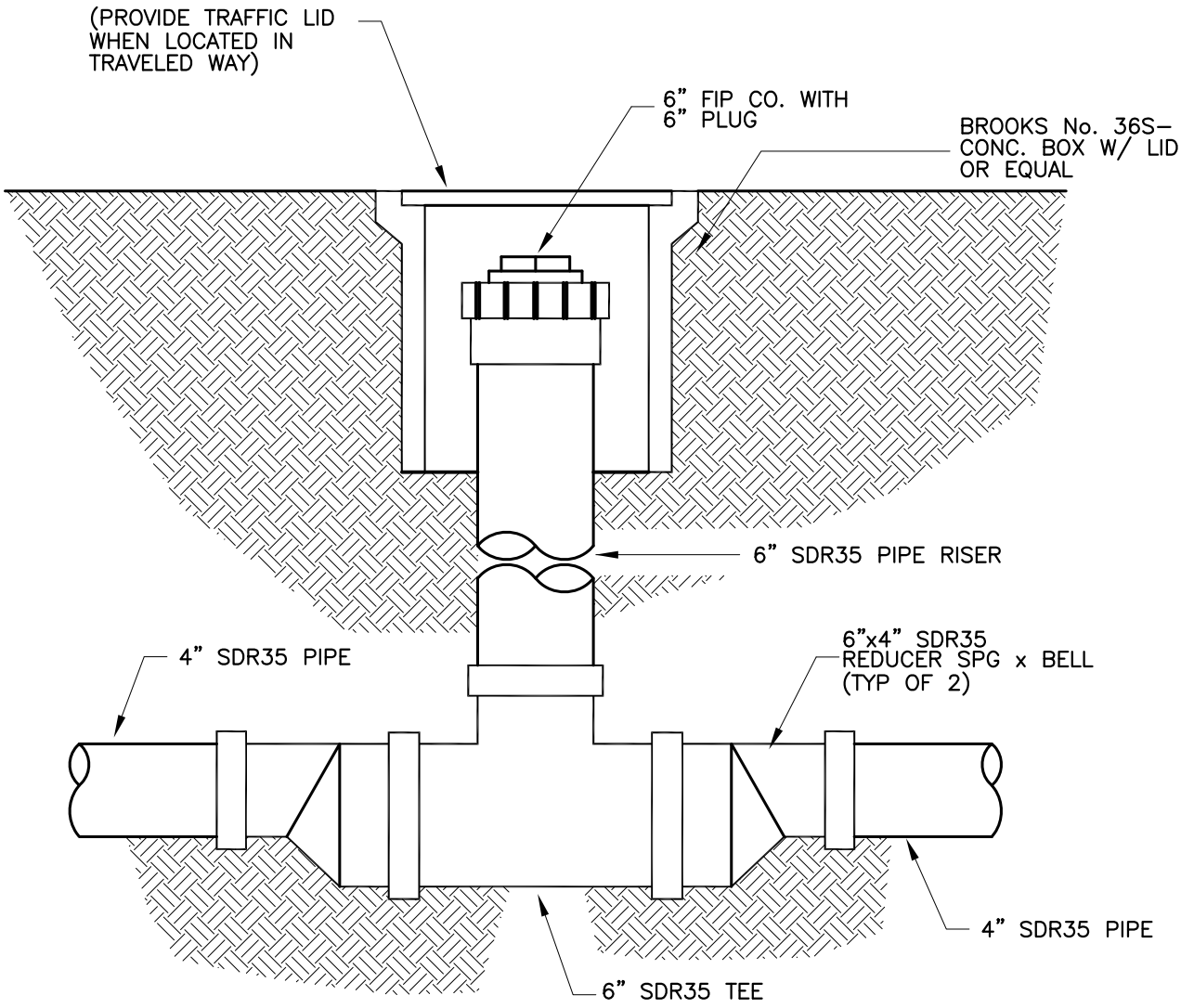

NOTE:

MONITOR STATION MUST BE LEVEL.

NOT TO SCALE

Public Works Director

TEHAMA COUNTY STANDARD PLANS

REV. NO.	DATE	BY		DATE
			OGI OR SOI INTERCEPTOR MONITORING STATION	1/07
				DWG. NO. 0942

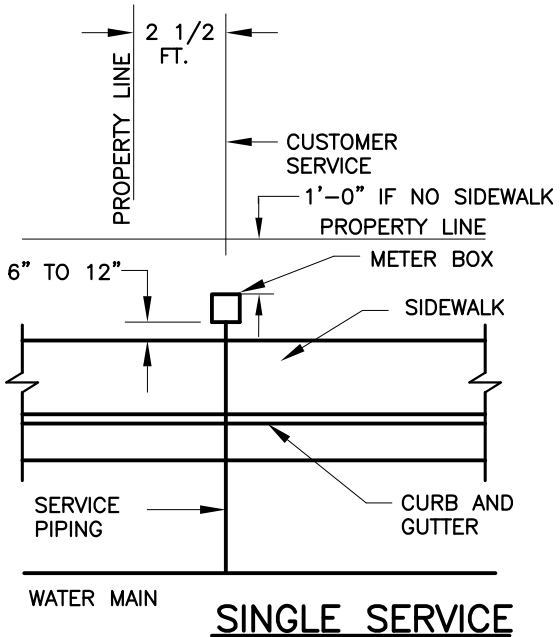

SINGLE SERVICE

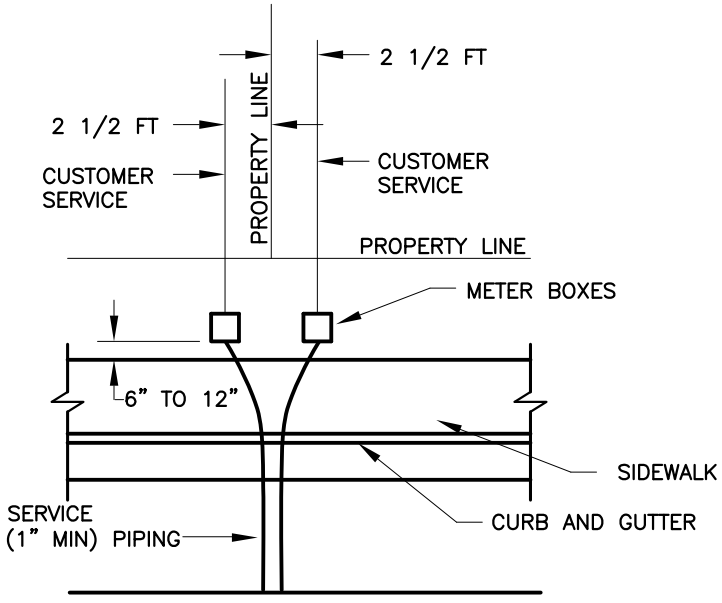

DOUBLE SERVICE

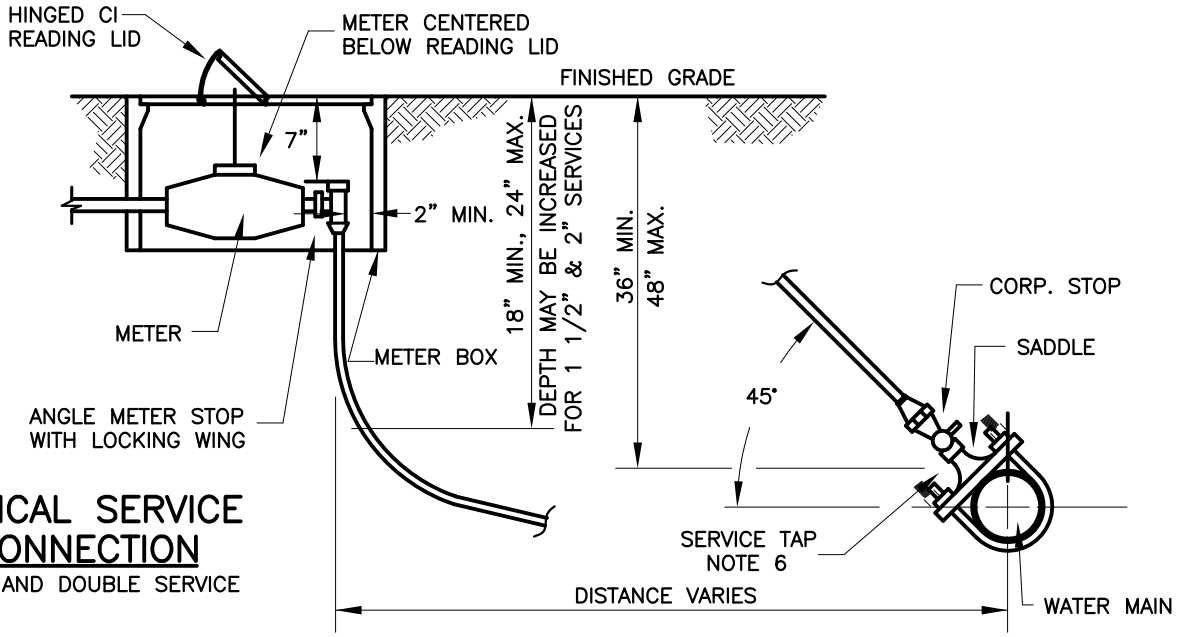

TYPICAL SERVICE CONNECTION

SINGLE AND DOUBLE SERVICE

NOTES:

1. STANDARD METER SIZE SHALL BE 3/4" x 5/8", FOR 3/4" SERVICE.
2. OTHER SERVICE SIZES THRU 2" SHALL HAVE THE SAME SIZE METER AS THE SERVICE LINE SIZE INCLUDING FULL 3/4" SERVICE.
3. METER BOXES SHALL HAVE CONCRETE LIDS (STEEL TRAFFIC LIDS IN DRIVEWAYS, SHOULDERS, PARKING AREAS, OR AREAS WITH ROLL CURB) WITH HINGED CI. READING LIDS.
4. ANGLE METER STOP VALVE SHALL BE POSITIONED IN METER BOX SO THAT METER REGISTER WILL BE CENTERED UNDER READING LID.
5. METER BOXES AND SERVICE PIPING SHALL BE INSTALLED WITH A MINIMUM OF 2 1/2 FT. CLEARANCE FROM ALL ELECTRICAL TRANSFORMERS, LIGHT STANDARDS AND OTHER UTILITY BOXES OR VAULTS.
6. ONLY SERVICE TAPS FOR 1 1/2" AND 2" MAY BE TAPPED OTHER THAN AT A 45° ANGLE, BUT ONLY WITH PRIOR APPROVAL OF THE COUNTY.

Public Works Director

NOT TO SCALE

TEHAMA COUNTY STANDARD PLANS

REV. NO.	DATE	BY		DATE
			WATER SERVICE CONNECTION **SINGLE/DOUBLE 3/4" THRU 2"**	1/07
				DWG. NO.
				0943

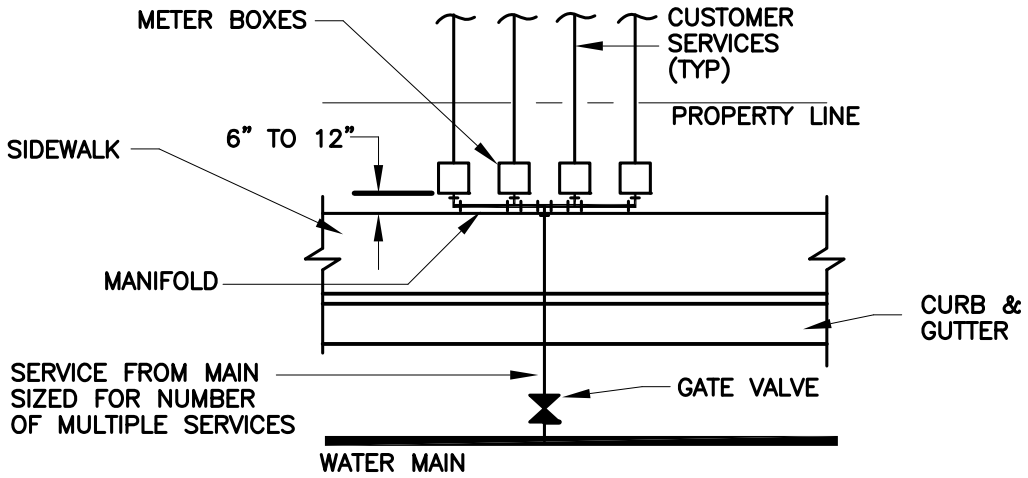

TYPICAL MULTIPLE SERVICE

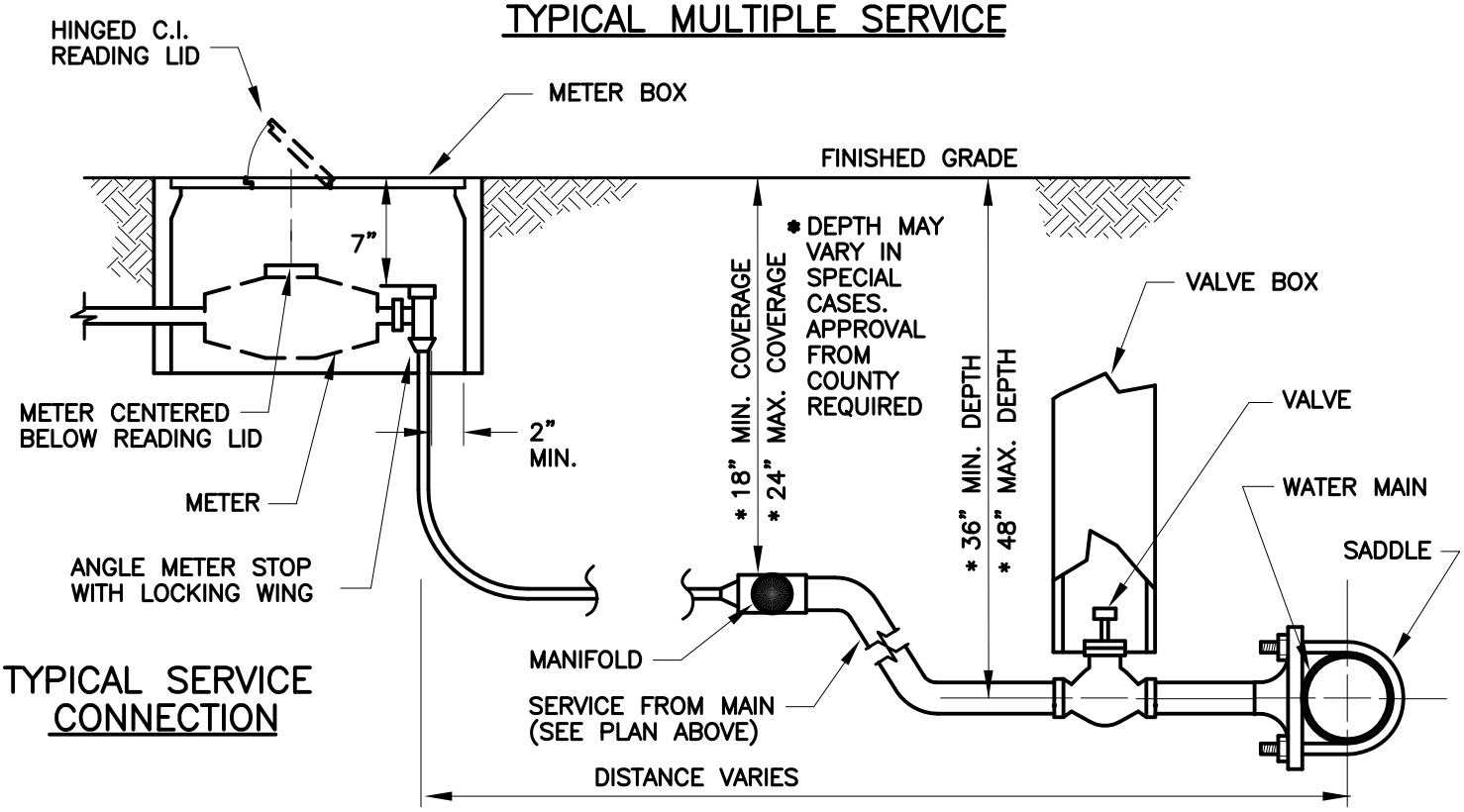

TYPICAL SERVICE CONNECTION

NOTES

1. REFER TO NOTES ON DWG. 0943
2. MANIFOLD TO BE SAME SIZE AS SERVICE FROM MAIN.

NOT TO SCALE

Public Works Director

TEHAMA COUNTY STANDARD PLANS

REV. NO.	DATE	BY		DATE
			WATER SERVICE CONNECTION 3/4" THRU 2" (3 SERVICES OR MORE)	1/07
				DWG. NO.
				0944

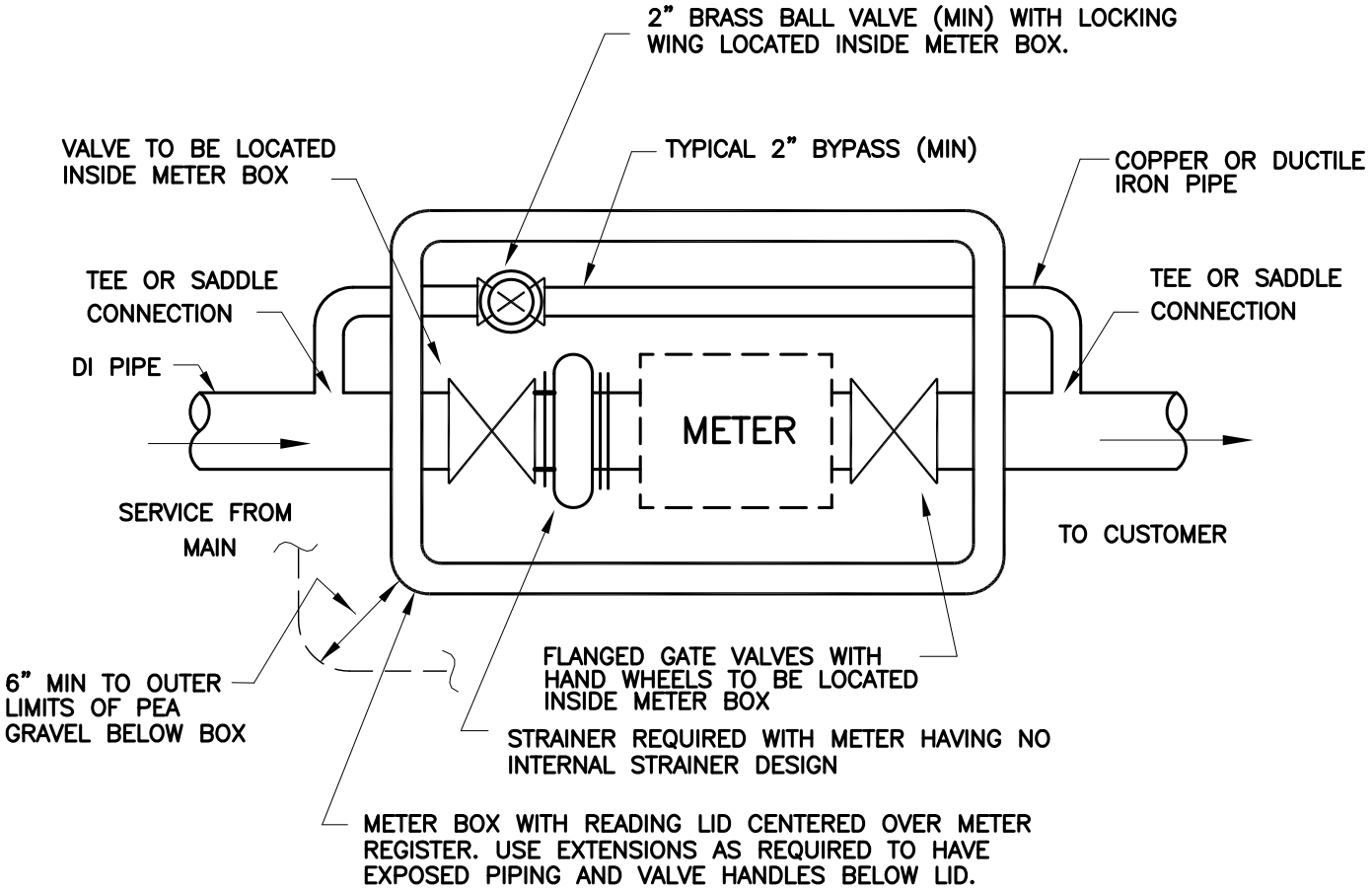

TYP. BYPASS INSTALLATION
3 INCH AND LARGER

NOTES:

1. MAXIMUM DEPTH OF METER REGISTER TO BE TWENTY FOUR (24) INCHES.
   NOTE: ALL METERS WHICH, DUE TO PLUMBING PROBLEMS, CANNOT BE RAISED TO MEET THE ABOVE DEPTH LIMIT SHALL HAVE A REMOTE READ OR REGISTER EXTENSION. ITEMS TO BE SUPPLIED BY CUSTOMER AND APPROVED BY THE COUNTY.
2. ALL VAULTS FOR 3" AND LARGER SERVICES REQUIRE 12" MIN PEA GRAVEL DEPTH BELOW BOX
3. COPPER BYPASS TO BE DIELECTRICALLY SEPARATED FROM DI SADDLE OR TEE USING UNION OR NYLON BUSHING.
4. METER TYPE TO BE APPROVED BY COUNTY BASED ON CONDITIONS OF USAGE.
5. METER TO BE REMOVEABLE BY METER COUPLINGS OR FLANGED COUPLING ADAPTERS.

Public Works Director

NOT TO SCALE

TEHAMA COUNTY STANDARD PLANS

REV. NO.	DATE	BY		DATE
			WATER SERVICE CONNECTION METER & BYPASS DETAIL 3" SERVICES & LARGER	1/07
				DWG. NO. 0945

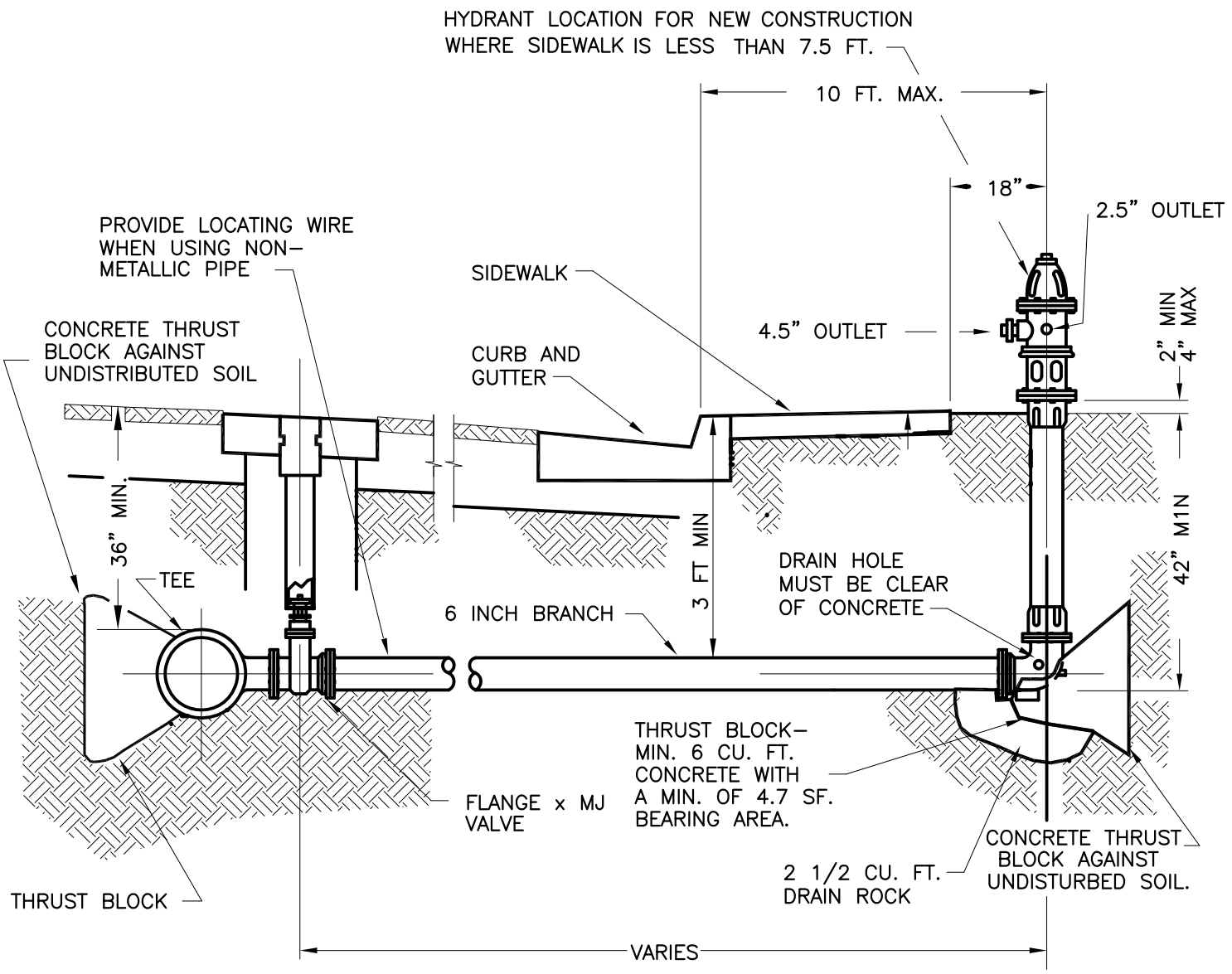

NOTES:

1. ALL CONSTRUCTION SHALL BE INSPECTED BY THE RESPONSIBLE AGENCY PRIOR TO BURIAL
2. HYDRANT LOCATIONS TO BE APPROVED BY THE AGENCY HAVING JURISDICTION.
3. A MINIMUM DISTANCE OF 3 FT. SHALL BE CLEAR OF ALL VEGETATION AND OTHER OBSTRUCTIONS AROUND FIRE HYDRANT.
4. FIRE HYDRANT TYPE SHALL BE IN ACCORDANCE WITH CHAPTER 6
5. FIRE HYDRANT SHALL BE LOCATED IN SUCH A MANNER THAT THE 4.5" OUTLET FACES THE STREET

NOT TO SCALE

Public Works Director

TEHAMA COUNTY STANDARD PLANS

REV. NO.	DATE	BY		DATE
			DRY BARREL	1/07
			FIRE HYDRANT	DWG. NO.
				0946

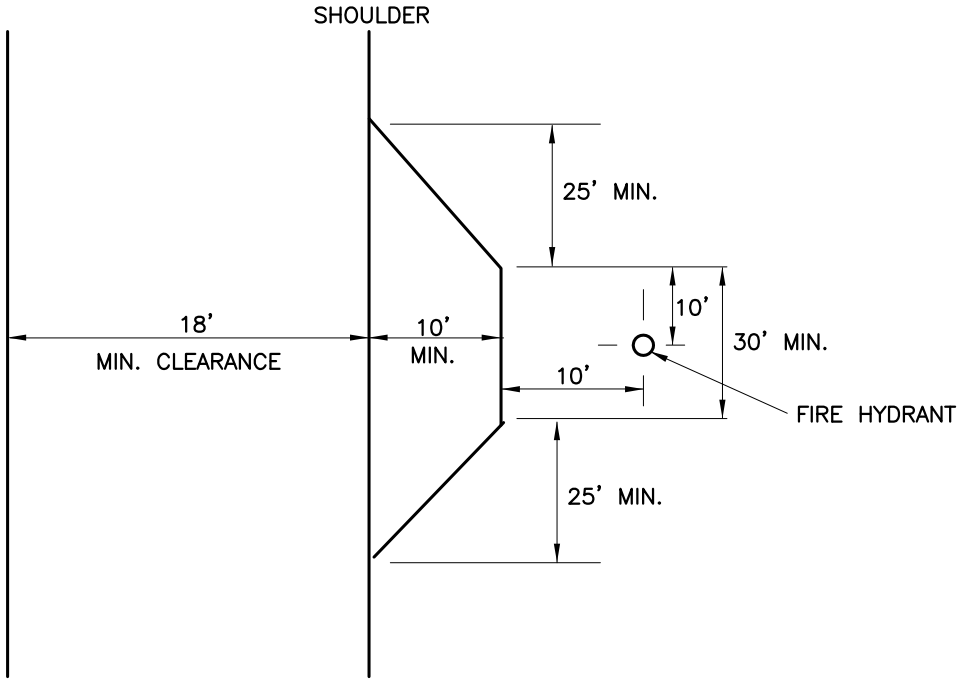

PLAN

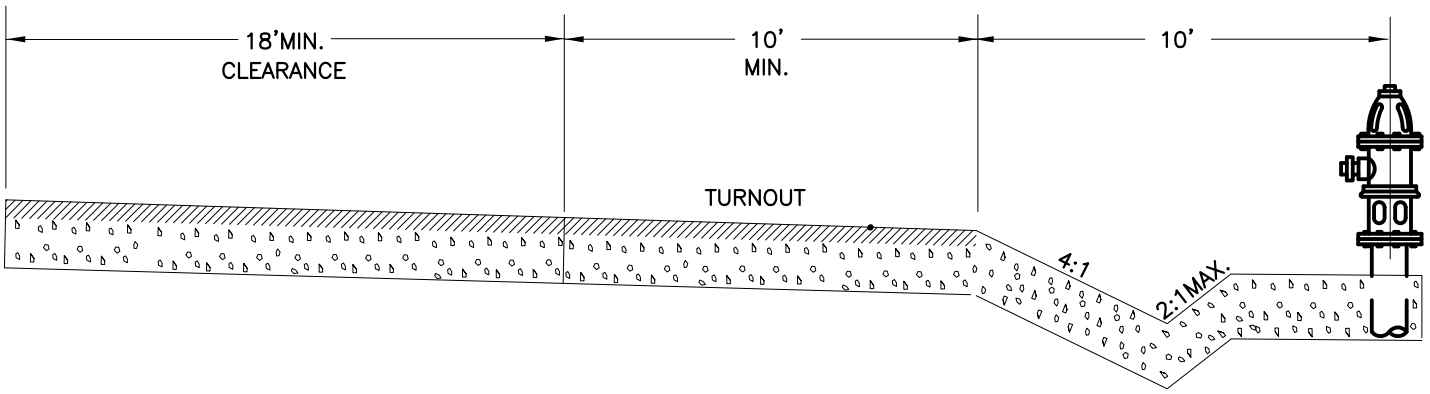

SECTION

NOT TO SCALE

Public Works Director

TEHAMA COUNTY STANDARD PLANS

REV. NO.	DATE:	BY		DATE
			FIRE HYDRANT TURNOUT	1/07
				DWG. NO.
				0946a

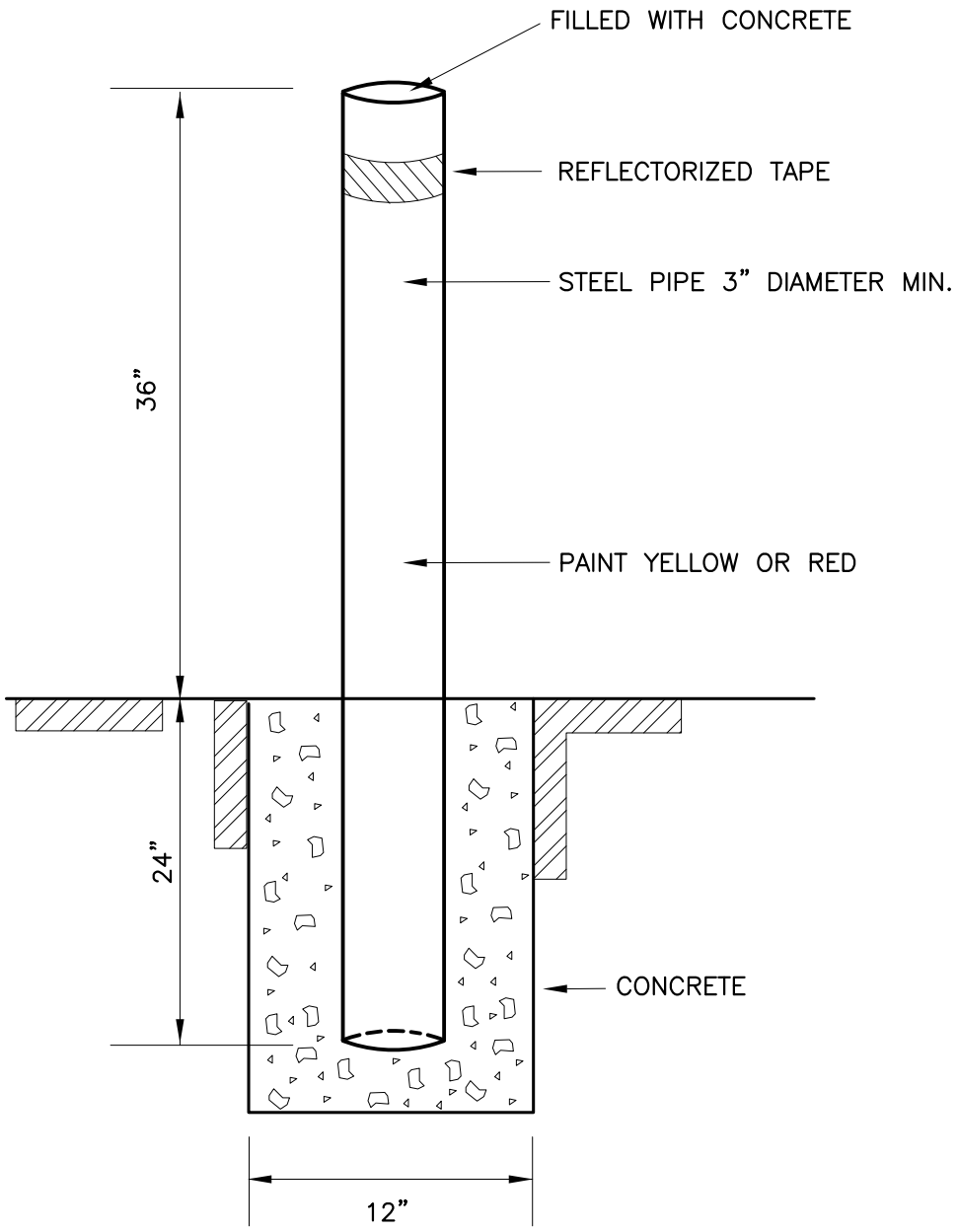

NOTE

1. NOT FOR USE ON PUBLIC PROPERTY OR PRIVATE ROADWAYS
2. NOT FOR USE WITHIN ROADWAY CLEAR ZONE
3. FOR USE ON PRIVATE PROPERTY ONLY

NOT TO SCALE

Public Works Director

TEHAMA COUNTY STANDARD PLANS

REV. NO.	DATE	BY		DATE
			FIRE HYDRANT STANDARD BARRIER	1/07
				DWG. NO. 0946b

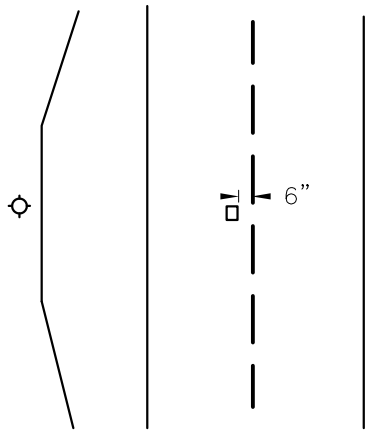

FIGURE 1
TWO LANE STREET

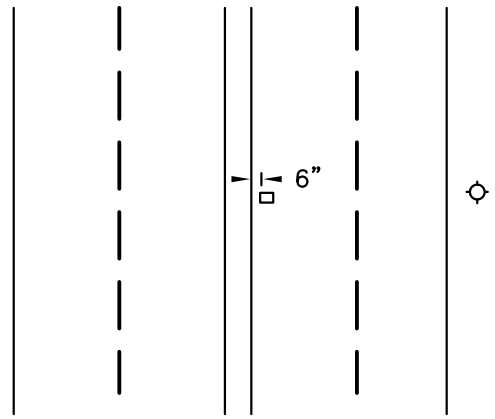

FIGURE 1
MULTI-LANE STREET

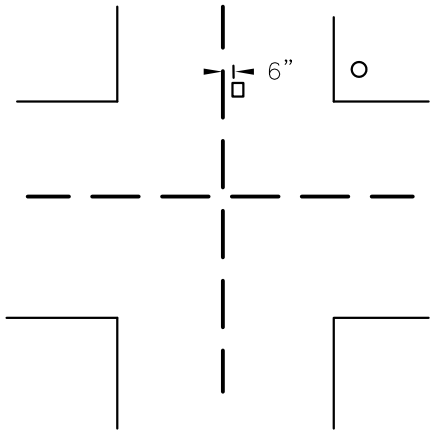

FIGURE 1
AT INTERSECTION

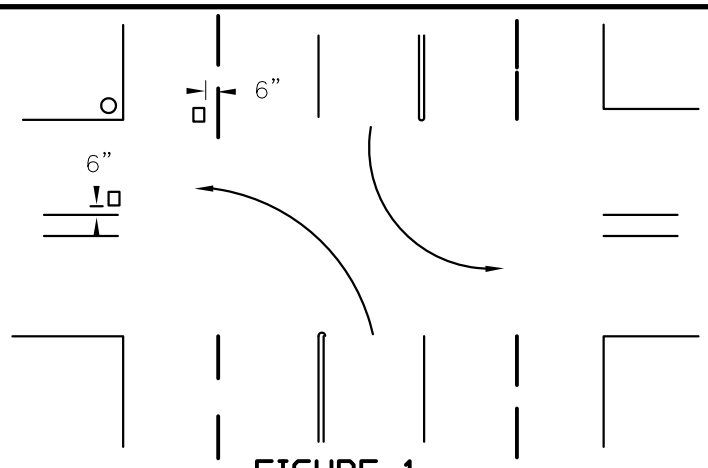

FIGURE 1
FOUR LANE AT STREET WITH
TURN LANE AT INTERSECTION

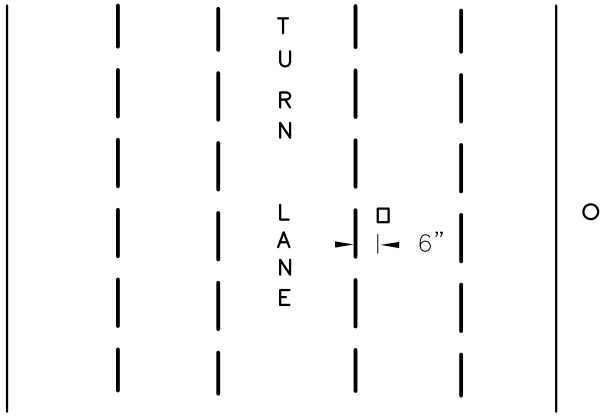

FIGURE 1
MULTI-LANE STREET
WITH TURN LANE

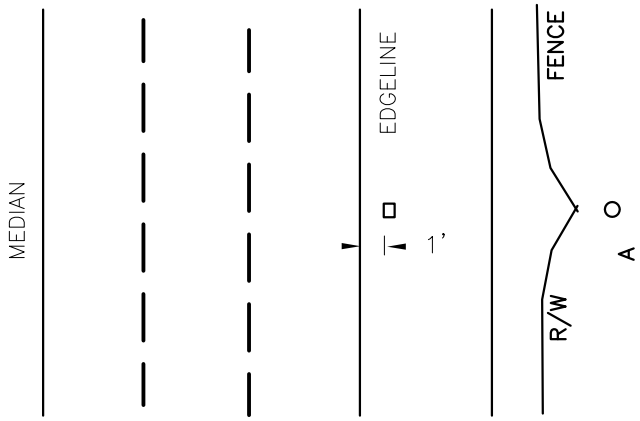

FIGURE 1 FREEWAY
AND EXPRESSWAY

Public Works Director

TEHAMA COUNTY STANDARD PLANS

REV. NO.	DATE:	BY		DATE 1/07
			TYPICAL HYDRANT MARKER LOCATION	DWG. NO. 0946c

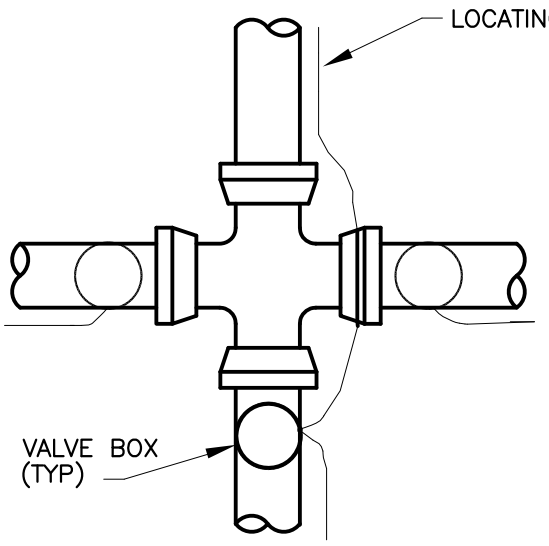

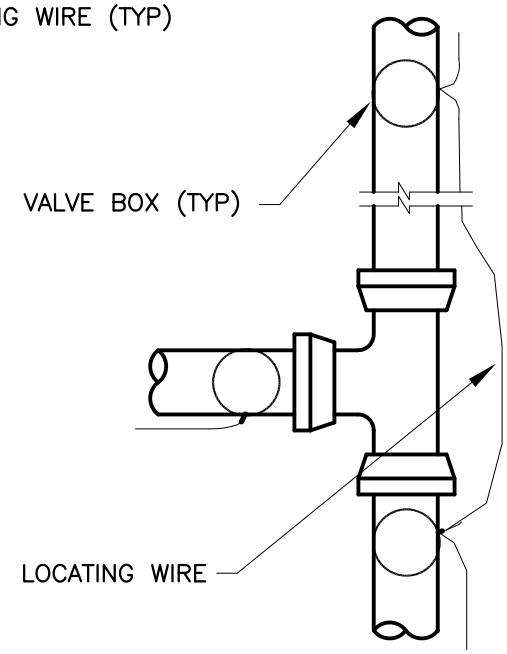

NOTICE:

LOCATING WIRE SHALL BE INSTALLED WITH ALL MAINS AND OFF STREET FIRE SERVICES & HYDRANTS

LOCATING WARNING TAPE SHALL BE INSTALLED 12" ABOVE ALL WATER MAINS IN OFFROAD INSTALLATIONS IN ADDITION TO LOCATING WIRE.

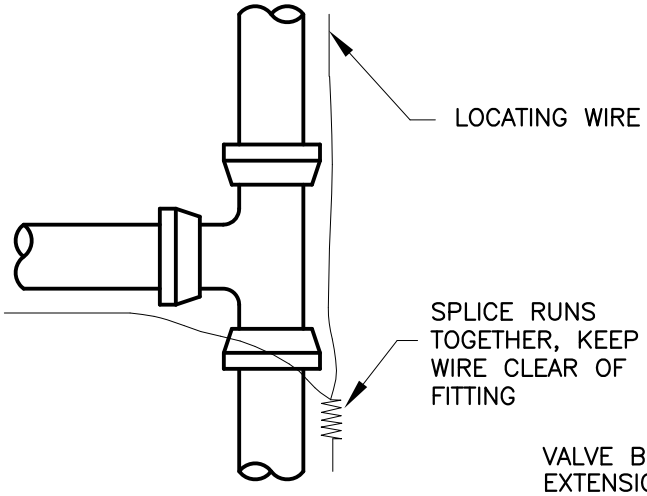

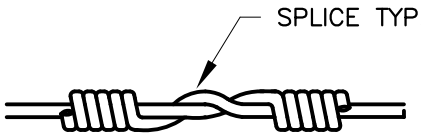

SPLICE DETAIL

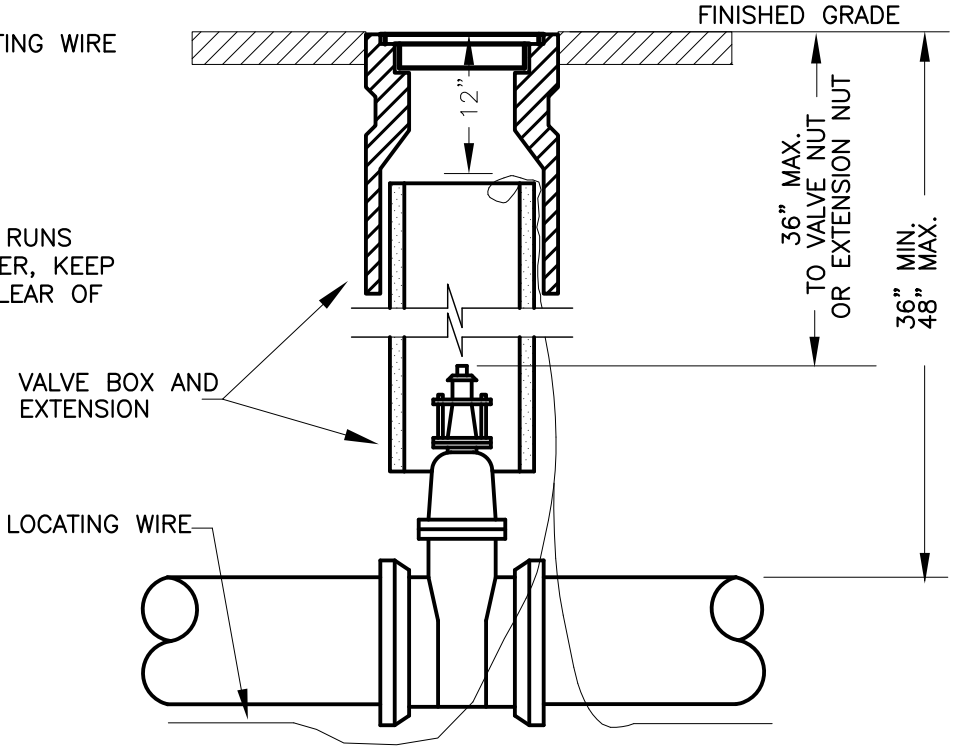

DETAIL AT BOX

NOTES:

1. BARE WIRE SHALL NOT TOUCH VALVE OR FITTINGS (MAINTAIN 3 INCHES CLEAR DISTANCE)
2. LOCATING WIRE SHALL BE PLACED AT BOTTOM OF TRENCH, NEXT TO PIPE. (DO NOT ATTACH WIRE TO PIPE)
3. ALL VALVES, INCLUDING FIRE HYDRANT VALVES, SHALL HAVE LOCATING WIRE
4. LOCATING WIRE SHALL BE INSULATED, #10 COPPER.

NOT TO SCALE

Public Works Director

TEHAMA COUNTY STANDARD PLANS

REV. NO.	DATE	BY		DATE
			LOCATING WIRE WARNING TAPE	1/07
				DWG. NO. 0947

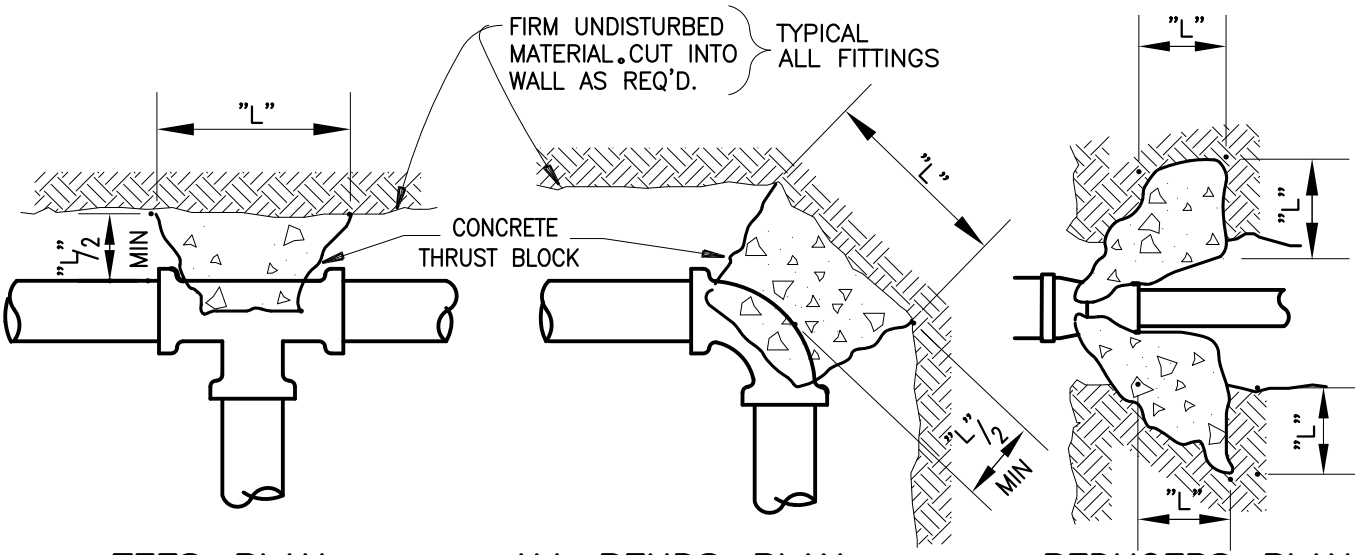

TEES–PLAN

ALL BENDS–PLAN

REDUCERS–PLAN

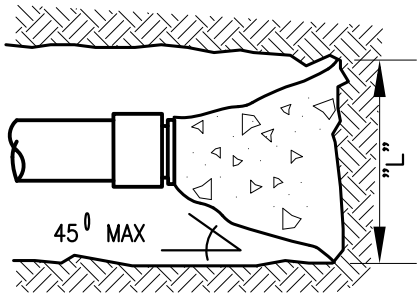

CAP OR PLUG
PLAN

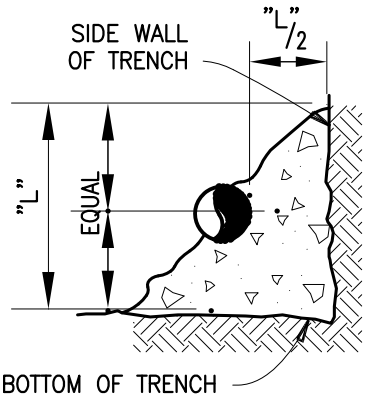

ALL FITTINGS
SECTION

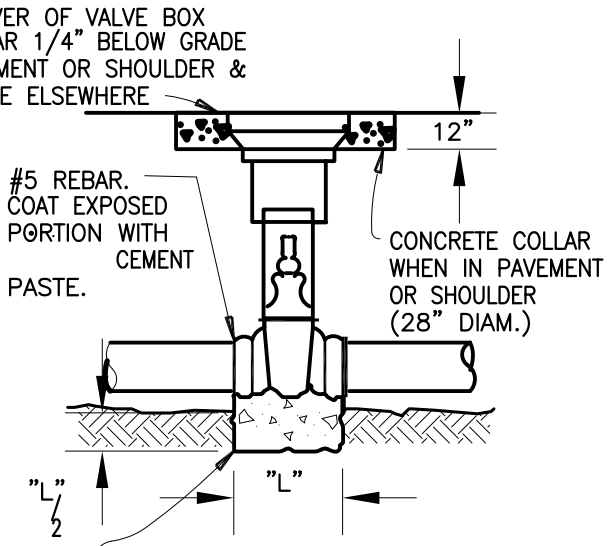

VALVE INSTALLATION
ELEVATION

NOTES:

1. THRUST BLOCKS SHALL BE PROVIDED AT ALL BURIED PIPE FITTINGS OF 4" DIA OR LARGER. THRUST BLOCK SIZE IS BASED ON PIPE SIZE, 150 PSI TEST PRESSURE, & SOIL BEARING OF 1200 LB/FT . DIMENSION "L" IS SHOWN IN TABLE 1 & IS BOTH A VERTICAL & HORIZONTAL DIMENSION UNLESS SHOWN OTHERWISE. IF PIPE COVER HAS BEEN APPROVED TO BE LESS THAN 30", INCREASE HORIZONTAL THRUST BLOCKS IN PROPORTION TO 30 INCHES DIVIDED BY THE ACTUAL COVER.
2. SEE TABLE 1 ON STD. PLAN 0949 FOR "L" DIMENSIONS.

NOT TO SCALE

Public Works Director

TEHAMA COUNTY STANDARD PLANS

REV. NO.	DATE	BY		DATE
			THRUST BLOCK DETAILS	1/07
				DWG. NO.
				0948

TABLE 1

NOMINAL PIPE DIAMETER INCHES	FITTINGS						
	TEE, WYE, OR PLUG	90° BEND	45° BEND	22-1/2° BEND	11-1/4° BEND	REDUCER (BASED ON LARGEST DIA.)	VALVE
4"	18	22	16	15	15	--	--
6"	26	31	23	17	15	--	--
8"	34	40	30	21	15	17	12
10"	41	49	36	26	18	21	12
12"	49	59	44	31	22	25	16
14"	58	68	50	36	26	30	16
16"	66	77	57	41	28	33	18
18"	74	88	65	45	32	37	REQUIRES
20"	81	97	71	50	36	41	SPECIAL
24"	97	115	85	61	43	49	DESIGN

TABLE 2

VERTICAL FITTING THRUST BLOCKS

WHERE VERTICAL BENDS ARE DIRECTED WITH THE THRUST TOWARD THE BOTTOM OF THE TRENCH, THEY SHALL HAVE THRUST BLOCKS PER HORIZONTAL BENDS EXCEPT CONCRETE SHALL BEAR AGAINST THE TRENCH BOTTOM.

WHERE VERTICAL BENDS ARE DIRECTED WITH THE THRUST TOWARD THE TOP OF TRENCH, THEY SHALL BE INSTALLED PER THE FOLLOWING DETAIL. MINIMUM ROD EMBEDMENT SHALL BE 30 INCHES FOR 12" AND SMALLER PIPE AND 36 INCHES FOR 14" AND LARGER PIPE.

CUBIC YARDS CONCRETE FOR VERTICAL FITTINGS (SEE DETAIL BELOW)

BEND ANGLE	PIPE DIAMETER						
	4"	6"	8"	10"	12"	14"	16" AND OVER
11-1/4°	0	0.4	0.7	0.9	1.3	1.8	REQUIRES SPECIAL DESIGN
22-1/2°	0.4	0.8	1.3	1.8	2.5	3.4	
45°	0.7	1.4	2.4	3.5	4.9	6.6	
90°	1.3	2.5	4.3	4.3	9.1	12.2	

STEEL RODS. TWO 5/8" DIAMETER MINIMUM. ADD EXTRA ROD FOR EVERY TWO YARDS CONCRETE OVER 4 YARDS. COAT EXPOSED RODS WITH PORTLAND CEMENT PASTE.

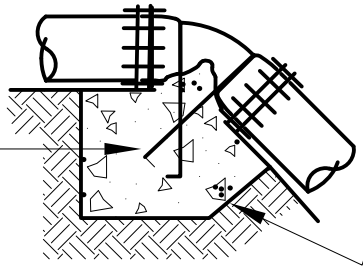

CONCRETE FOR GRAVITY ANCHOR. VOLUME OF CONCRETE PER TABLE 2.

ELEVATION

Public Works Director

NOT TO SCALE

TEHAMA COUNTY STANDARD PLANS

REV. NO.	DATE	BY		DATE
			THRUST BLOCK TABLES	1/07
				DWG. NO. 0949

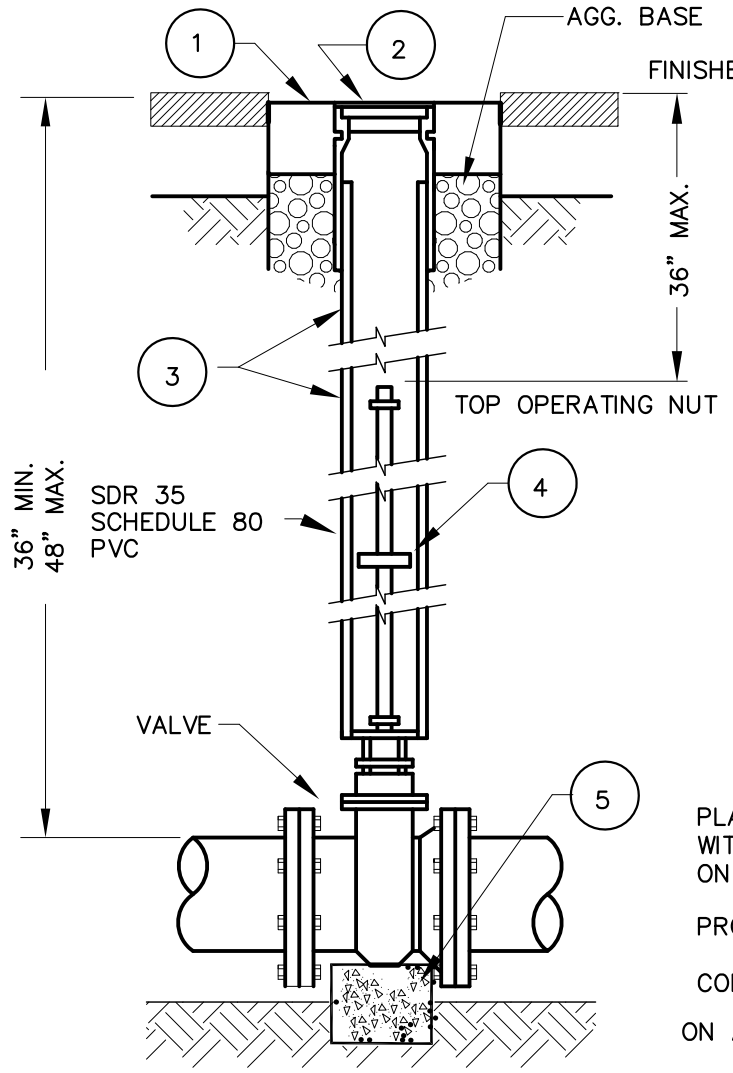

OPERATING NUT EXTENSION DETAIL

REQUIRED WHERE DISTANCE BETWEEN FINISHED GRADE AND TOP OF OPERATING NUT EXCEED 36 INCHES

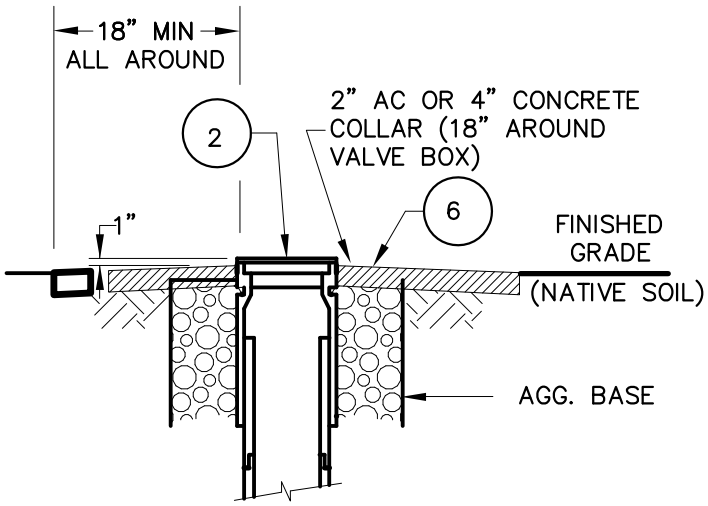

VALVE COVER PLACEMENT

NATIVE GROUND DETAIL

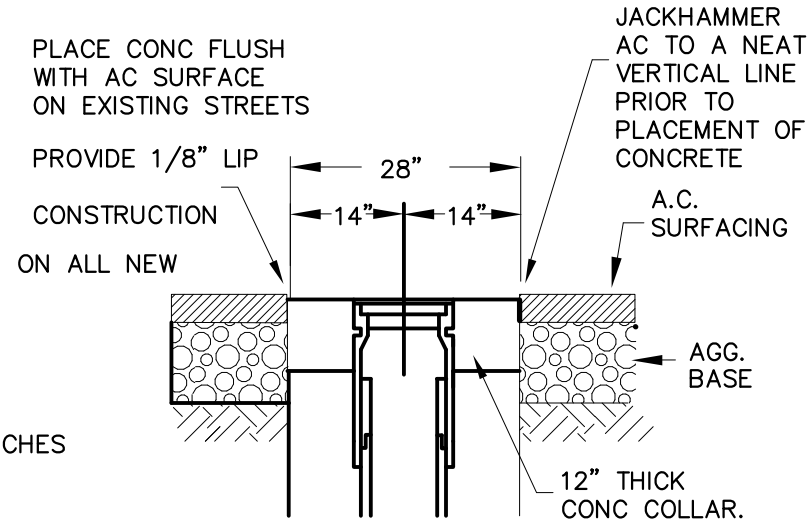

VALVE COVER ADJUSTMENT

NOTES:

1. 28" DIA. X 12" DEEP CONC. COLLAR
2. VALVE BOX
3. VALVE BOX EXTENSION
4. OPERATING NUT EXTENSION W/ 6" DIA. PLATE WASHER WELDED TO EXTENSION AT MID POINT OF ROD.(MIN. LENGTH OF ROD SHALL BE 24 INCHES)
5. PROVIDE CONC. SUPPORT UNDER 8" & LARGER VALVES. SEE STD. PLAN 0948.
6. PLACE 2" AC. OR 4" THICK CONC. COLLAR 18" AROUND VALVE BOX.
7. NO OPERATING NUT EXTENSION REQUIRED WHERE DISTANCE BETWEEN FINISHED GRADE AND TOP OF VALVE OPERATION NUT IS LESS THAN 36 INCHES.

Public Works Director

NOT TO SCALE

TEHAMA COUNTY STANDARD PLANS

REV. NO.	DATE	BY		DATE
			WATER VALVE DETAILS **PAVED AND UNPAVED SURFACES**	1/07
				DWG. NO.
				0950

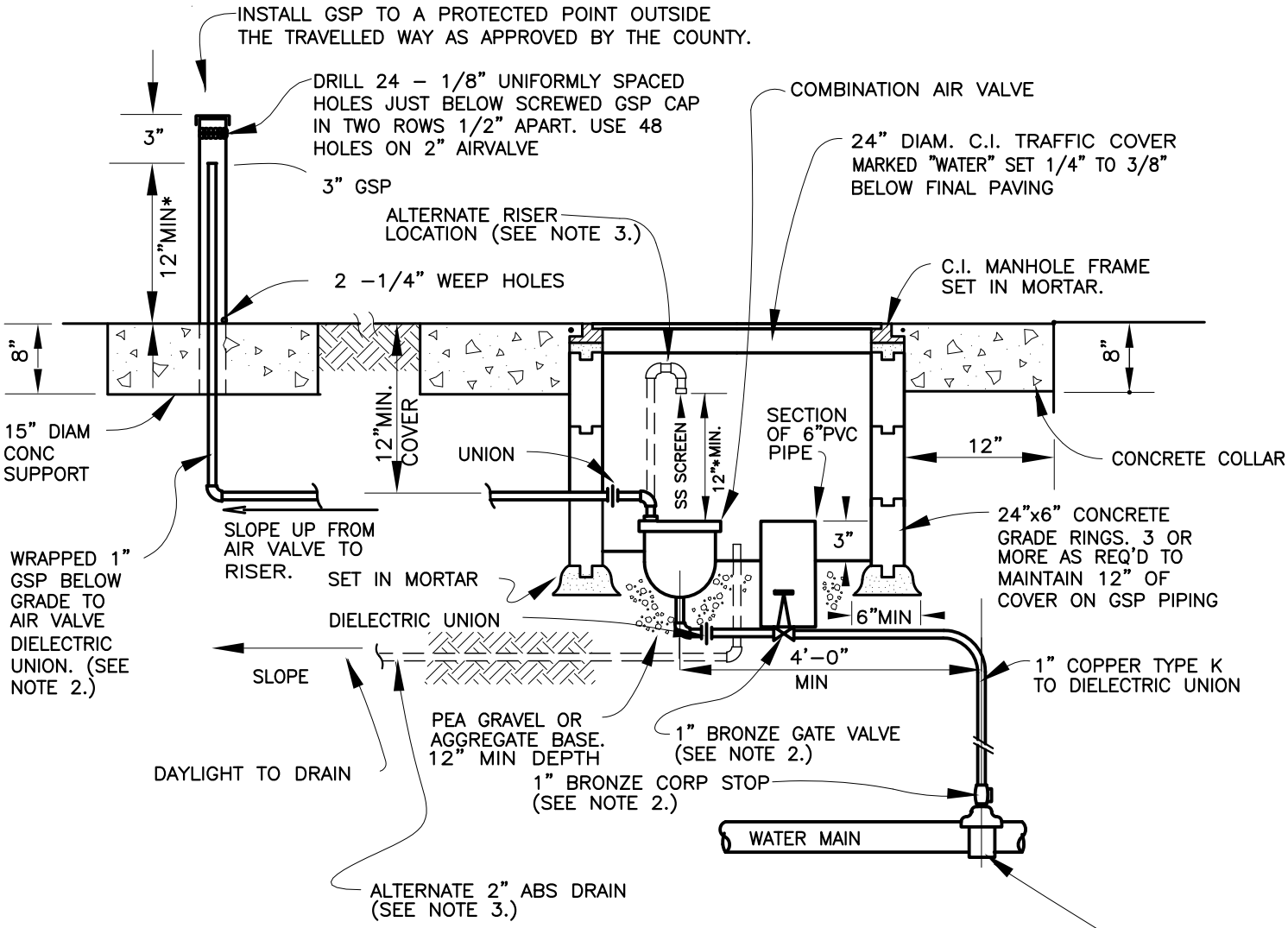

NOTES:

1. NOTE: ALSO 12" MIN ABOVE MAX RECORDED FLOOD LEVEL.
2. PIPE SIZE SHOWN IS FOR 1" AIR VALVE USE 2" FOR 2" AIR VALVE.
3. AN ALTERNATE TO THE GSP PIPING AND RISER ABOVE GRADE, WHERE APPROVED BY THE ENGINEER, IS TO PLACE THE GSP RISER WITHIN THE MANHOLE AND INSTALL A 2" ABS DRAIN TO APPROVED LOCATION AS SHOWN IN DASHED LINES ABOVE.

Public Works Director

NOT TO SCALE

TEHAMA COUNTY STANDARD PLANS

REV. NO.	DATE	BY		DATE
			ROADWAY AIR VALVE ASSEMBLY	1/07
				DWG. NO.
				0951

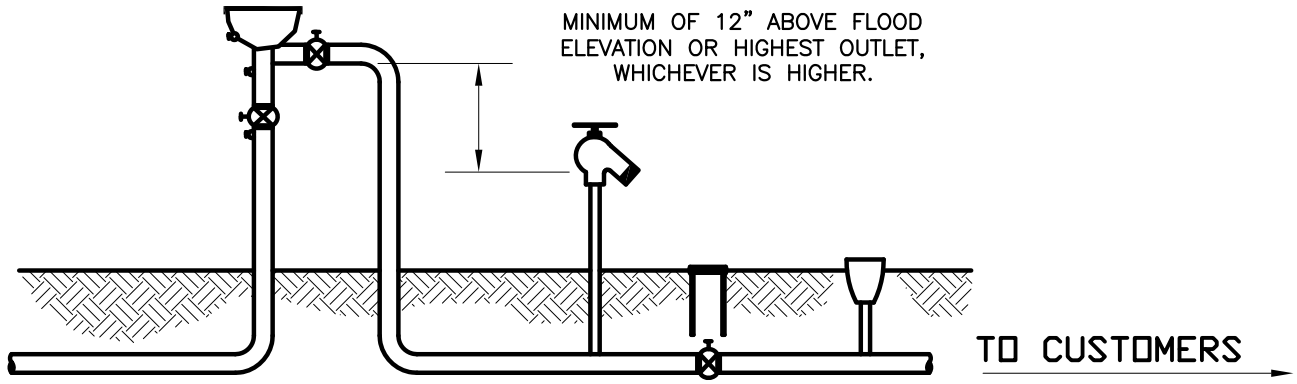

DOWNSTREAM SIDE OF PRESSURE VACUUM BREAKER SHALL BE MAINTAINED UNDER PRESSURE BY A VALVE. THERE SHALL BE NO MEANS OF IMPOSING PRESSURE BY PUMP OR OTHER MEANS.

NOTE:

ONLY ASSEMBLIES TESTED AND CERTIFIED BY AN ACCEPTABLE LABORATORY AND APPROVED FOR USE BY THE CALIFORNIA DEPARTMENT OF HEALTH SERVICES SHALL BE INSTALLED.

PRESSURE VACUUM BREAKER

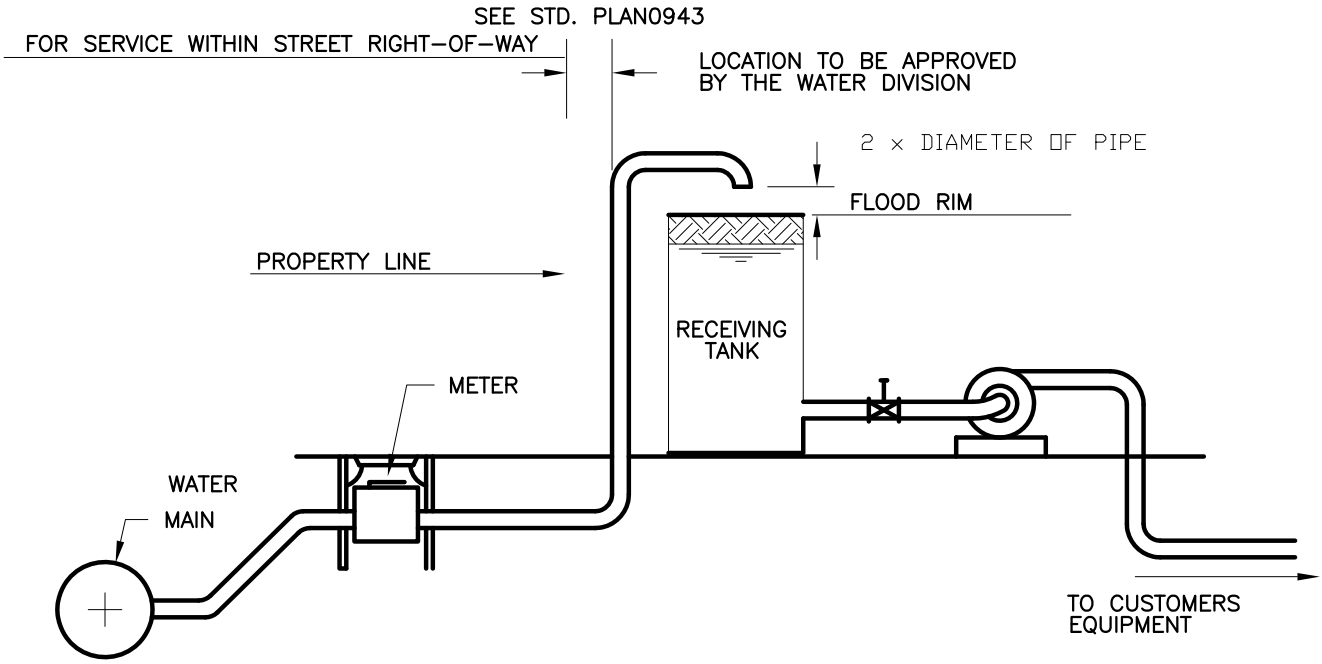

AIR GAP SEPARATION

NOTES:

1. RECEIVING TANK SHALL BE LOCATED AS CLOSE TO PROPERTY AS PRACTICAL.
2. NO CONNECTIONS OR TEES SHALL BE ALLOWED IN SERVICE LINE BETWEEN METER AND RECEIVING TANK.
3. FOR INSTALLATION OF WATER SERVICE AND METER SEE STD. PLAN 0943.
4. BACKFLOW CONTROL DEVICES ARE REQUIRED UNDER STATE OF CALIFORNIA ADMINISTRATIVE CODE, TITLE 17, AND SHALL BE INSTALLED IN ACCORDANCE THEREOF.

Public Works Director

NOT TO SCALE

TEHAMA COUNTY STANDARD PLANS

REV. NO.	DATE:	BY		DATE
			WATER SERVICE DETAILS FOR PRESSURE VACUUM BREAKER & AIR GAP SEPARATION	1/07
				DWG. NO.
				0952

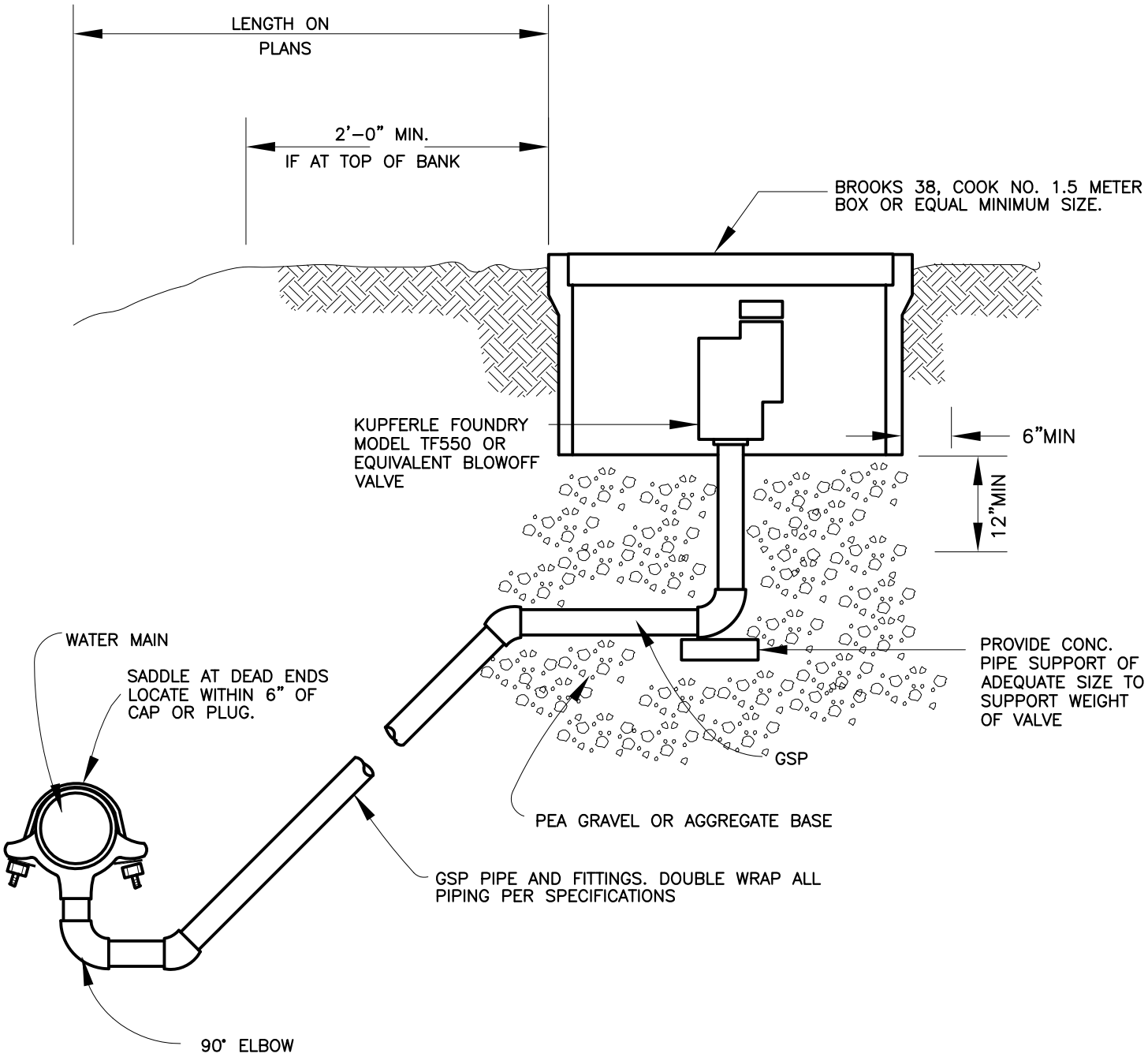

NOTE:

1. BLOWOFF PIPING SIZE TO BE 1/4 OF PIPE DIAMETER, BUT NO SMALLER THAN 2".
2. PIPING DIAMETER & LENGTH FOR BLOWOFF SHALL BE AS SHOWN ON PLANS. EXAMPLE: 2",15'

NOT TO SCALE

Public Works Director

TEHAMA COUNTY STANDARD PLANS

REV. NO.	DATE	BY		DATE
			BLOWOFF INSTALLATION	1/07
				DWG. NO.
				0953

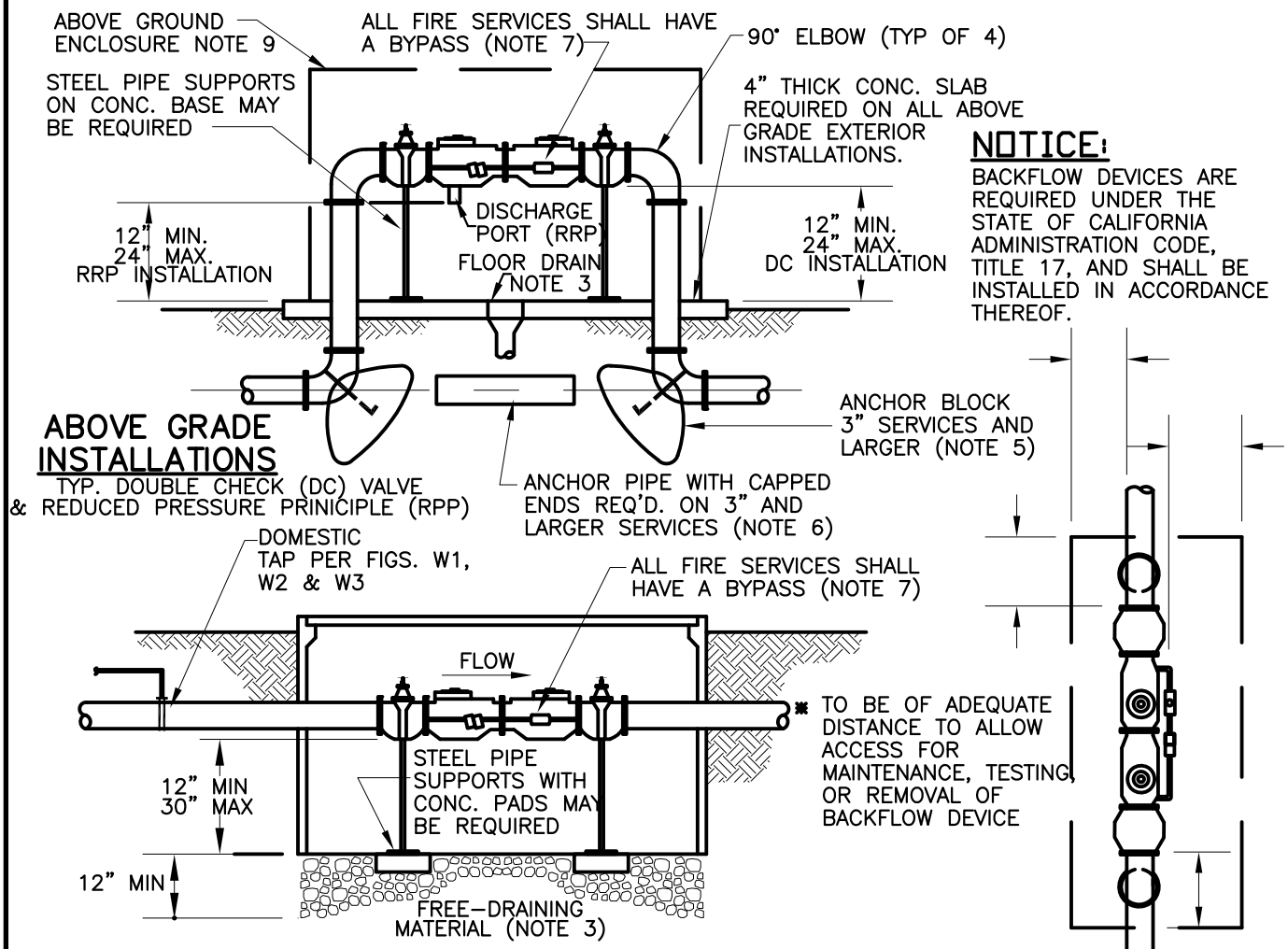

ABOVE GRADE INSTALLATIONS

TYP. DOUBLE CHECK (DC) VALVE & REDUCED PRESSURE PRINICIPLE (RPP)

BELOW GRADE INSTALLATIONS

TYP. DOUBLE CHECK VALVE (DC) ONLY

NOTICE:

BACKFLOW DEVICES ARE REQUIRED UNDER THE STATE OF CALIFORNIA ADMINISTRATION CODE, TITLE 17, AND SHALL BE INSTALLED IN ACCORDANCE THEREOF.

NOTE:

1. ALL CONSTRUCTION AND ALL MATERIALS USED SHALL BE IN ACCORDANCE WITH THE TEHAMA COUNTY DEVELOPMENT STANDARDS AND THE SPECIFICATION FOR PUBLIC WORKS CONSTRUCTION. (GREEN BOOK – LATEST EDITION)
2. ALL ABOVE GROUND PIPING INSTALLATIONS, 3/4" THROUGH 2", SHALL BE COPPER OR BRASS AND ALL 3" AND LARGER SHALL BE DUCTILE IRON PIPE WITH FLANGED FITTINGS.
3. WHEN VALVES ARE INSTALLED WITHIN THE CONFINES OF A BUILDING (SPECIAL CASE), ENCLOSURE OR VAULT, ADEQUATE DRAINAGE SHALL BE PROVIDED.
4. A REDUCED PRESSURE PRINICIPLE DEVICE (RPP) MAY BE REQUIRED DEPENDING ON THE APPLICATION. RRP TO BE INSTALLED ABOVE GRADE ONLY.
5. ALL THRUST BLOCKS OR ANCHORS TO BE DESIGNED ON AN INDIVIDUAL BASIS. SEE STD. PLAN 0948.
6. APPLICANT SHALL HAVE THE OPTION OF DESIGNING AND CONSTRUCTING CONCRETE ANCHORS AS SHOWN OR PLACING A CONTINUOUS CONCRETE BLOCK BETWEEN ELBOWS. IF SOIL IS UNDISTURBED. CONTRACTOR MAY OMIT BRACE WITH PRIOR COUNTY APPROVAL.
7. BYPASS LINES ARE REQUIRED ON ALL FIRE SERVICES WHERE DOUBLE CHECK OF RPP VALVE IS INSTALLED. BYPASS SHALL HAVE A DETECTOR METER AND DOUBLE CHECK OR RRP VALVE. DOMESTIC TAPS ARE PERMITTED ON THE STREET SIDE OF THE BACKFLOW DEVICE ONLY. BACK FLOW DEVICE SHALL BE LOCATED WITHIN COUNTY RIGHT-OF-WAY.
8. ALL STEEL BACKFLOW DEVICES SHALL BE FUSION BONDED EPOXY COATED INTERNALLY AND EXTERNALLY.
9. ABOVE GRADE ENCLOSURE INSTALLATIONS SEE STD. PLAN 0955 & 0955A.
10. VALVES LARGER THAN 8" SHALL HAVE INDIVIDUALLY DESIGNED VAULTS AND SHALL HAVE APPROVAL OF THE COUNTY PRIOR TO FABRICATION.
11. ALL ABOVE GRADE PIPING AND VALVES SHALL BE WRAPPED WITH ADEQUATE INSULLATION TO PREVENT FREEZING. METHOD SHALL HAVE PRIOR APPROVAL OF THE COUNTY.

NOT TO SCALE

Public Works Director

TEHAMA COUNTY STANDARD PLANS

REV. NO.	DATE:	BY		DATE 1/07
			DOUBLE CHECK VALVE AND REDUCED PRESSURE PRINICIPLE DEVICES	DWG. NO. 0954

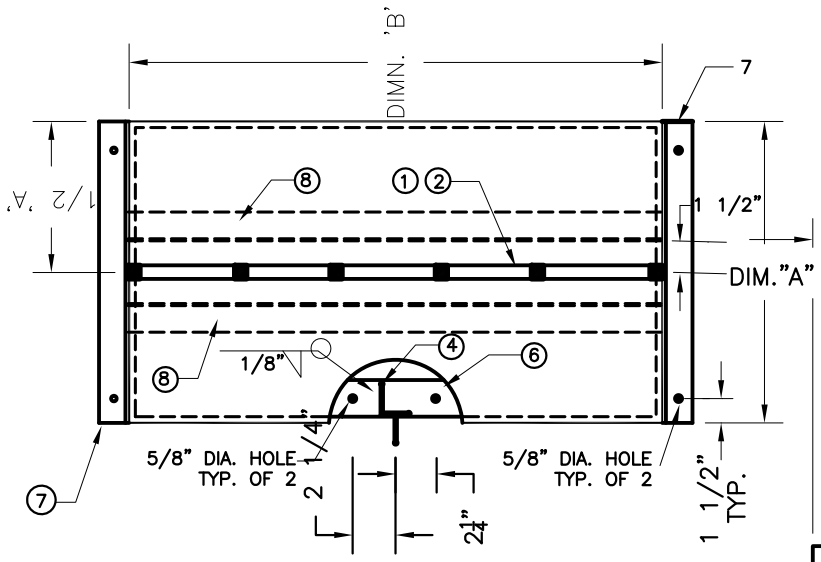

TOP VIEW

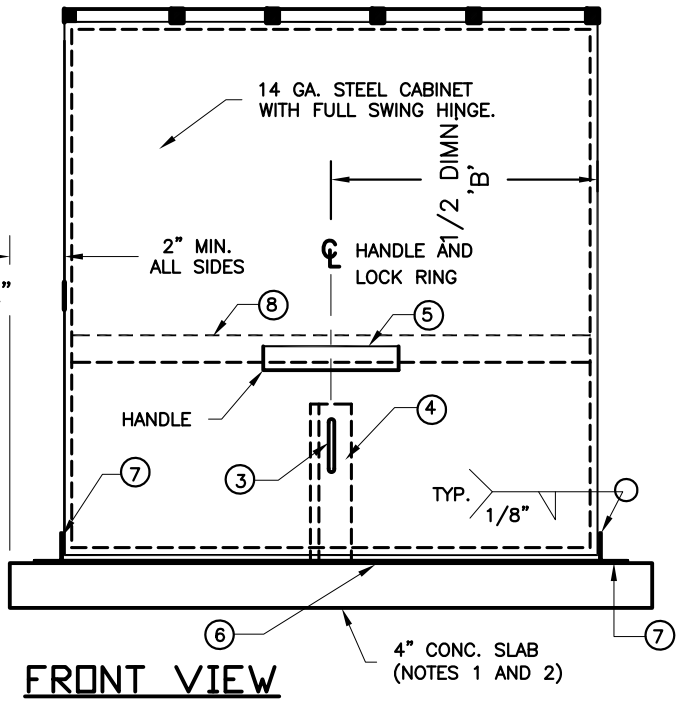

FRONT VIEW

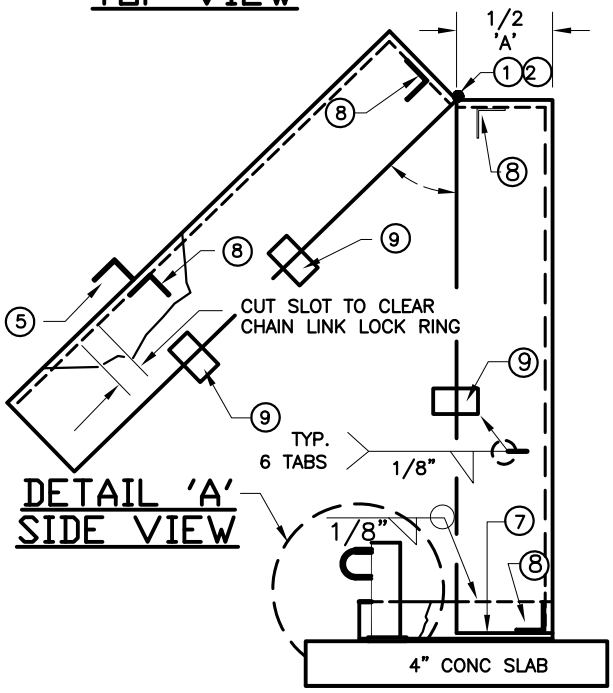

DETAIL 'A'
SIDE VIEW

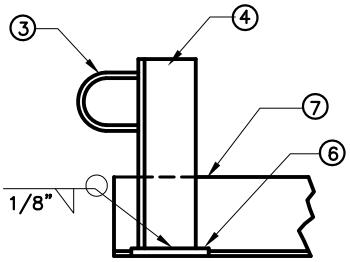

DETAIL 'A'

MATERIALS LIST FOR BACK FLOW DEVICE ENCLOSURE

ITEM NO.	DESCRIPTION	LENGTH FOR 1 1/2" AND 2" DEVICES	LENGTH FOR 3/4" AND 1" DEVICES	QTY.
1	5/16" COLD ROLL HINGE PIN	32"	25"	
2	1/4" PIPE HINGE	32"	25"	
3	1/4" X 1 1/2" X 1 1/2" CHAIN LINK	N/A	N/A	
4	1/4" X 1 1/2" X 1 1/2" ANGLE	5"	5"	
5	1/8" X 1" X 1" ANGLE HANDLE	4"	4"	
6	1/4" X 2" FLAT BAR	32 1/4"	25 1/4"	
7	1/8" X 1 1/2" X 1 1/2" ANGLE	20 1/2"	12 1/2"	2
8	1/8" X 1 1/4" X 1 1/4" ANGLE BRACE	32"	25"	4
9	1/8" X 1" ALIGNMENT TABS	2"	2"	

NOTES:

1. CABINET SHALL BE MOUNTED ON A 4" THICK CONC. SLAB WITH 3/8" x 4" "J" BOLTS (TYP. OF 6). SLAB TO EXTEND MIN. OF 2" BEYOND CABINET.
2. ALL PIPING PASSING THROUGH SLAB SHALL PASS THROUGH A PVC SLEEVE FOR THE FULL THICKNESS OF THE SLAB. THE SLEEVE SHALL HAVE A DIAMETER 1/2" LARGER THAN THAT OF THE PIPE.
3. CABINET SHALL BE PAINTED WITH OLIVE GREEN POWDER COAT PAINT.

	1 1/2" AND 2"	
A	20 1/2"	12 1/2"
B	32"	25"
C	25"	25"

NOT TO SCALE

Public Works Director

TEHAMA COUNTY STANDARD PLANS

REV. NO.	DATE	BY

BACKFLOW DEVICE ENCLOSURE
(3/4" THROUGH 2")

DATE 1/07

DWG. NO. 0955

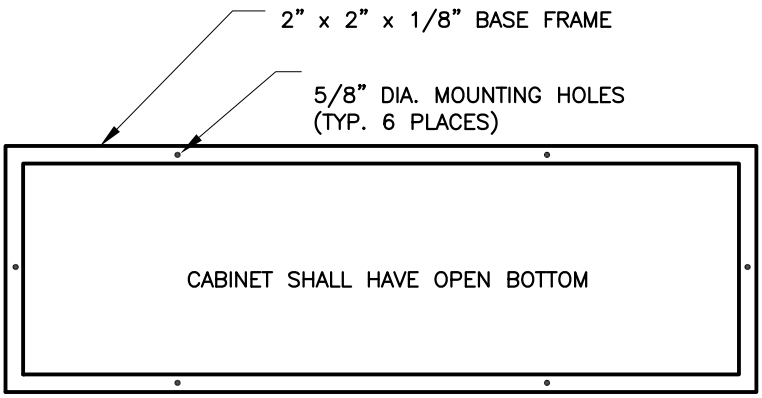

BOTTOM MOUNTING FRAME

CABINET DIMENSIONS			
UNIT SIZE	L	W	H
3" & 4"	78"	24"	48"
6"	96"	24"	60"
8"	108"	30"	60"

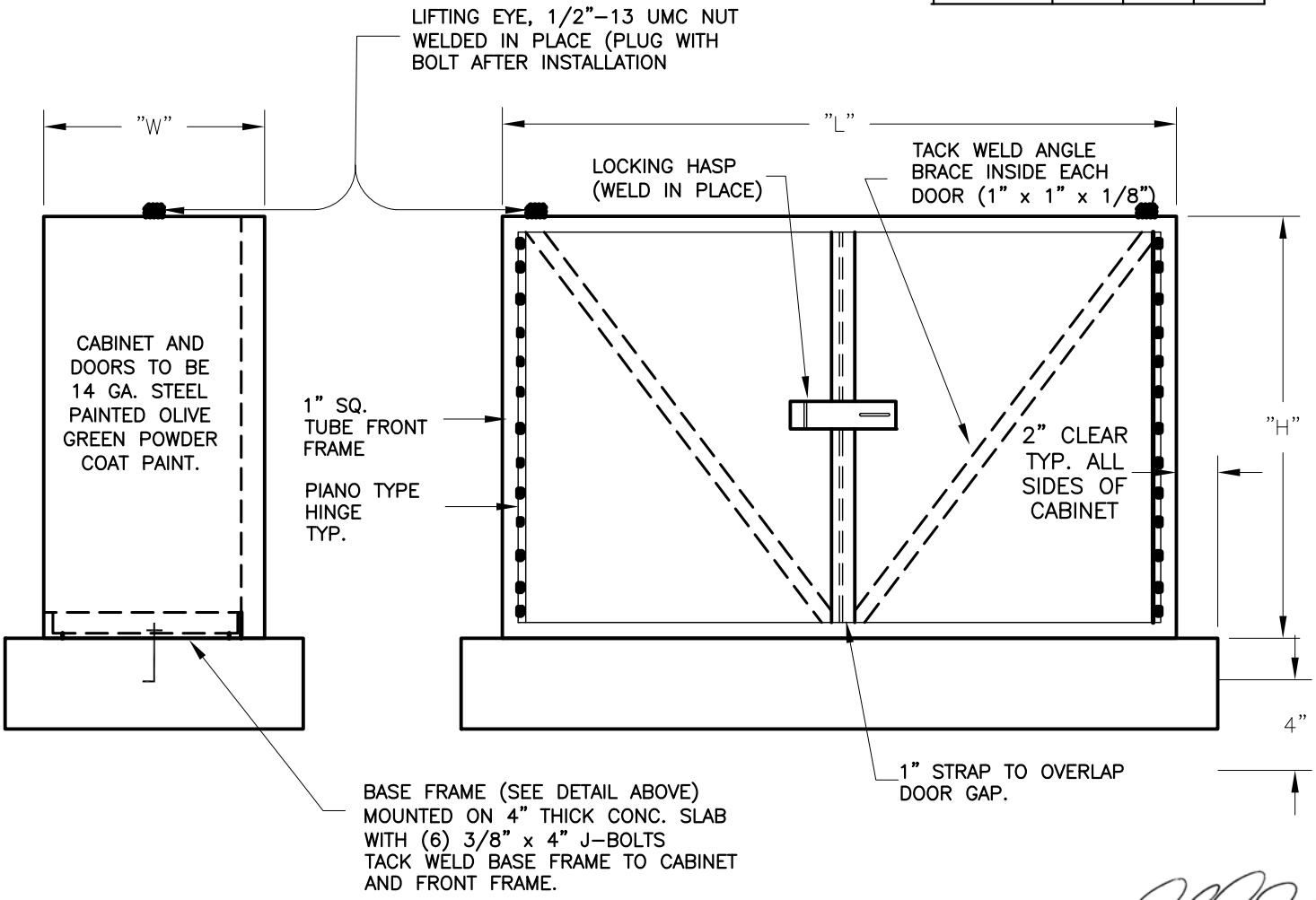

Public Works Director

NOT TO SCALE

TEHAMA COUNTY STANDARD PLANS

REV. NO.	DATE	BY		DATE
			BACKFLOW DEVICE ENCLOSURE (3" THRU 8")	1/07
				DWG. NO. 0955a

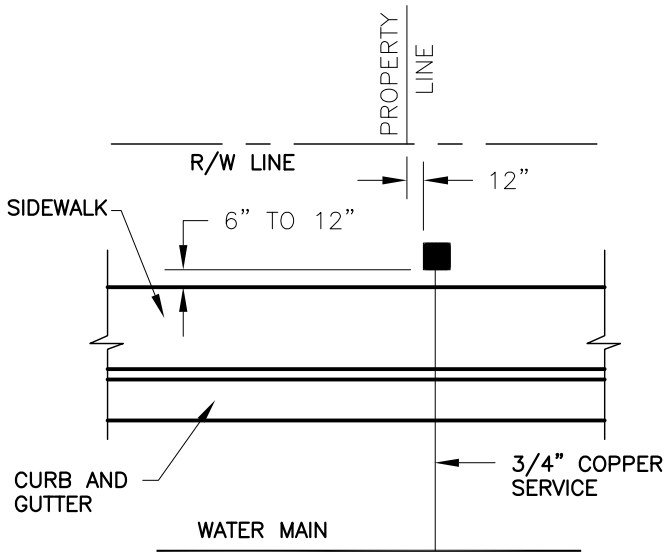

LOCATION

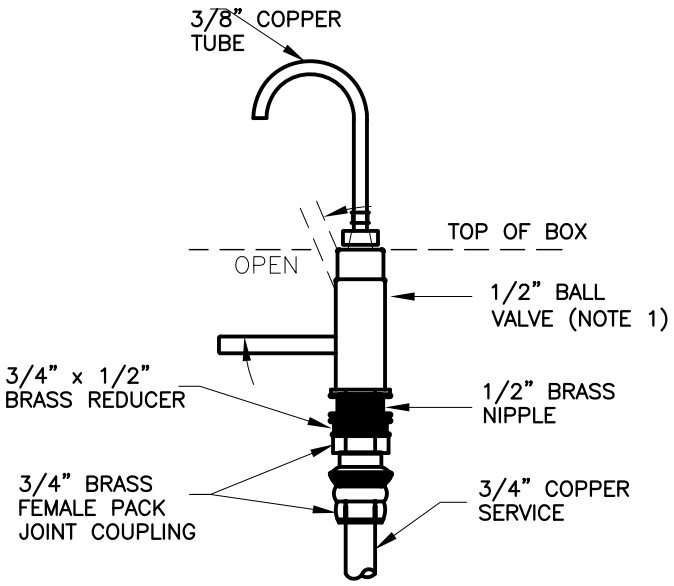

DETAIL A–A

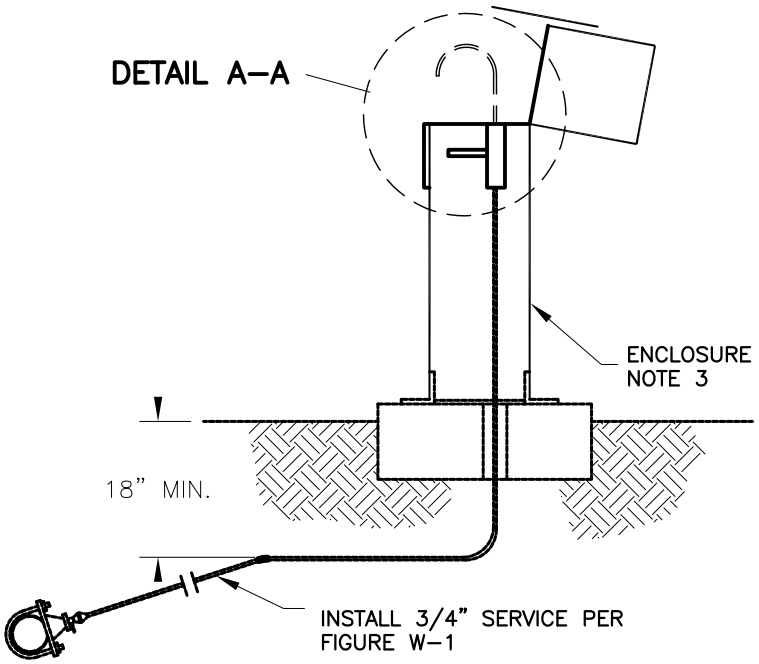

INSTALLATION DETAIL

NOTICE:

FIXED BACTERIOLOGICAL SAMPLING STATIONS ARE REQUIRED BY CALIFORNIA WATERWORKS STANDARDS TITLE 22. THE ESTABLISHMENT OF REPRESENTATIVE SAMPLE POINTS IS ESSENTIAL TO ASSURE THAT THE SAMPLING RESULTS FOUND ARE GIVING A TRUE INDICATION OF THE BACTERIOLOGICAL QUALITY OF THE WATER SUPPLIED THROUGHOUT THE DISTRIBUTION SYSTEM. BACTERIOLOGICAL SAMPLE STATIONS ARE REQUIRED AND SHALL BE INSTALLED IN NEW SUBDIVISIONS AT LOCATIONS AS DETERMINED BY THE COUNTY.

NOTES:

1. BALL VALVE SHALL BE 1/2" APOLLO 600 W.O.G. (70–102–01), OR EQUAL, WITH HANDLE. TOP OF VALVE SHALL BE INSTALLED FLUSH WITH TOP OF BOX. HANDLE SHALL OPEN UP.
2. ALL PIPE FITTINGS TO BE BRASS.
3. FOR BACTERIOLOGICAL STATION ENCLOSURE AND CONCRETE PAD SEE STD. PLAN 0957.
4. ALL ABOVE GRADE PIPING SHALL BE WRAPPED WITH ADEQUATE INSULATION TO PREVENT FREEZING. METHOD TO HAVE PRIOR APPROVAL OF THE COUNTY.

Public Works Director

NOT TO SCALE

TEHAMA COUNTY STANDARD PLANS

REV. NO.	DATE	BY		DATE
			BACTERIOLOGICAL SAMPLE STATION INSTALLATION	1/07
				DWG. NO. 0956

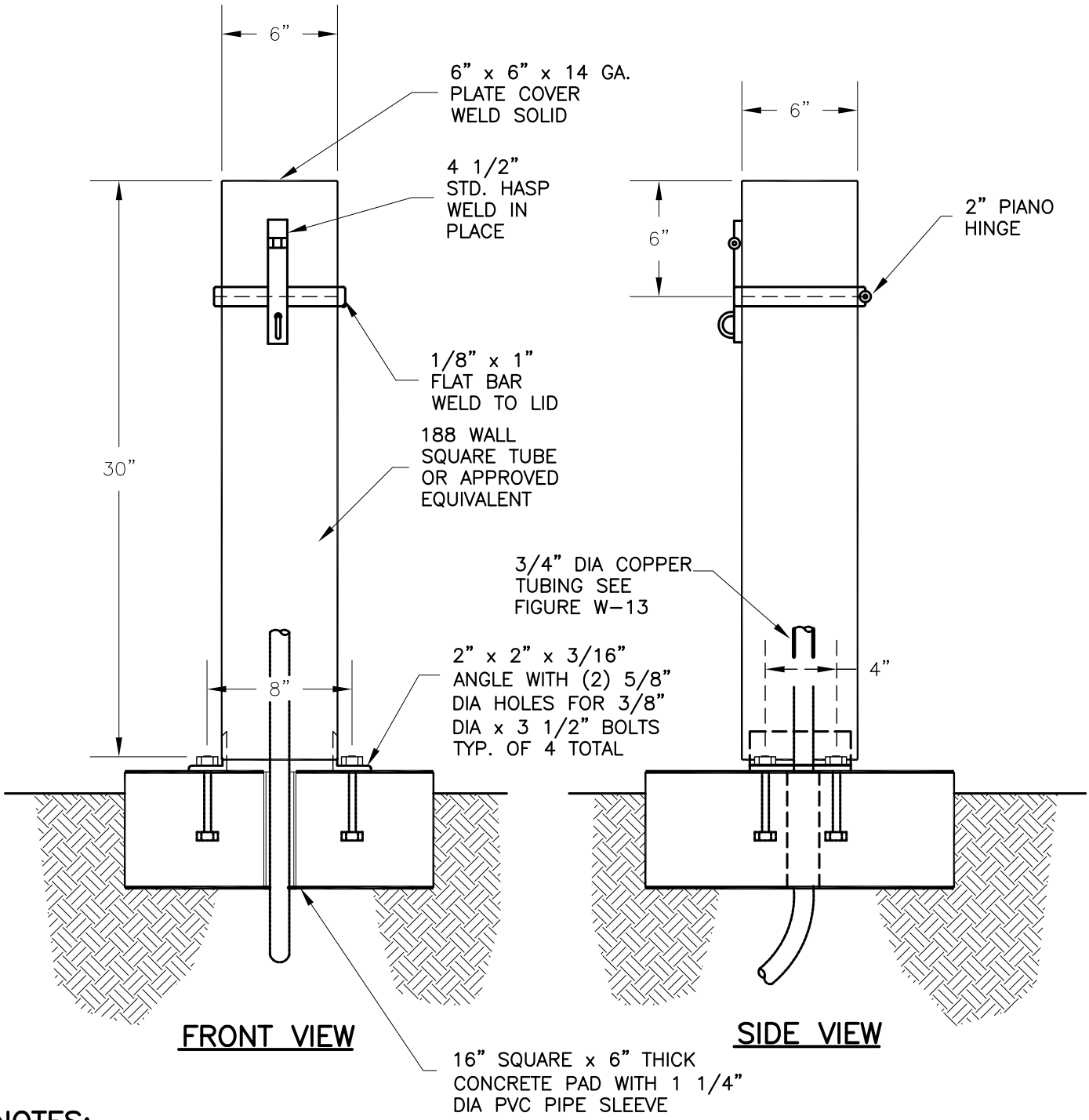

NOTES:

1. ALL EXPOSED STEEL SURFACES SHALL BE OLIVE GREEN POWDER COAT PAINT.
2. CONCRETE TO BE CLASS C-2500
3. ALL BOLTS AND NUTS TO BE GALVANIZED.

NOT TO SCALE

Public Works Director

TEHAMA COUNTY STANDARD PLANS

REV. NO.	DATE	BY		DATE
			BACTERIOLOGICAL SAMPLE STATION ENCLOSURE	1/07
				DWG. NO. 0957

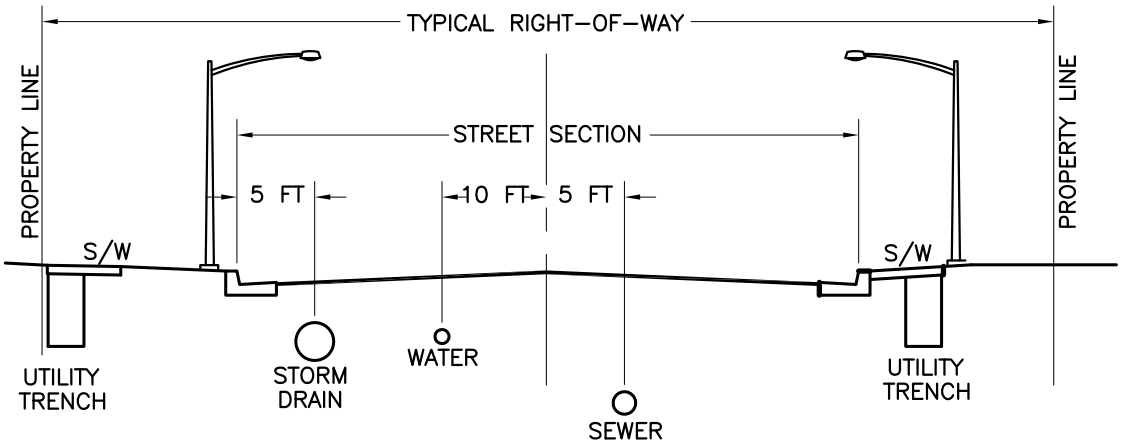

URBAN

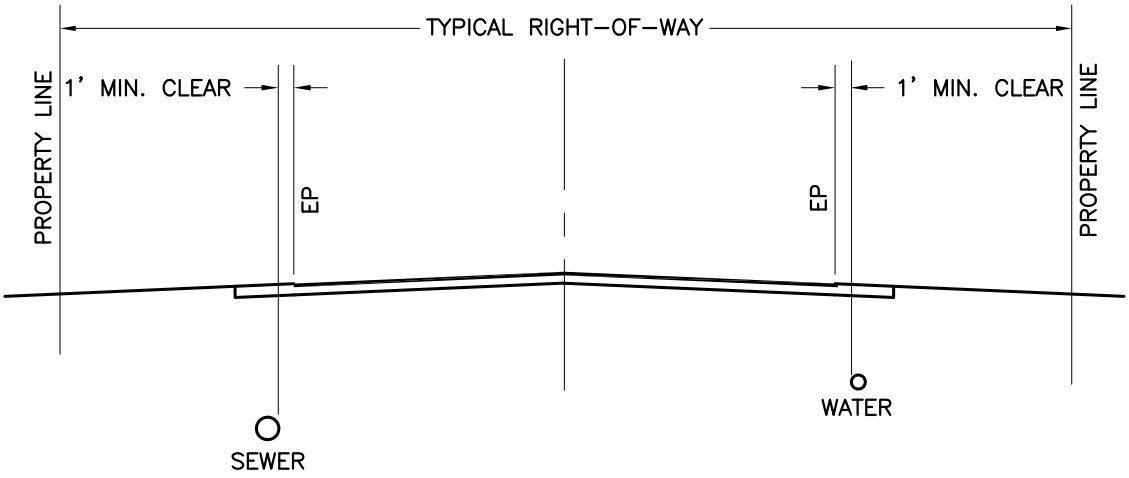

RURAL

NOT TO SCALE

Public Works Director

TEHAMA COUNTY STANDARD PLANS

REV. NO.	DATE:	BY		DATE 1/07
			UTILITY LOCATIONS	DWG. NO. 0958

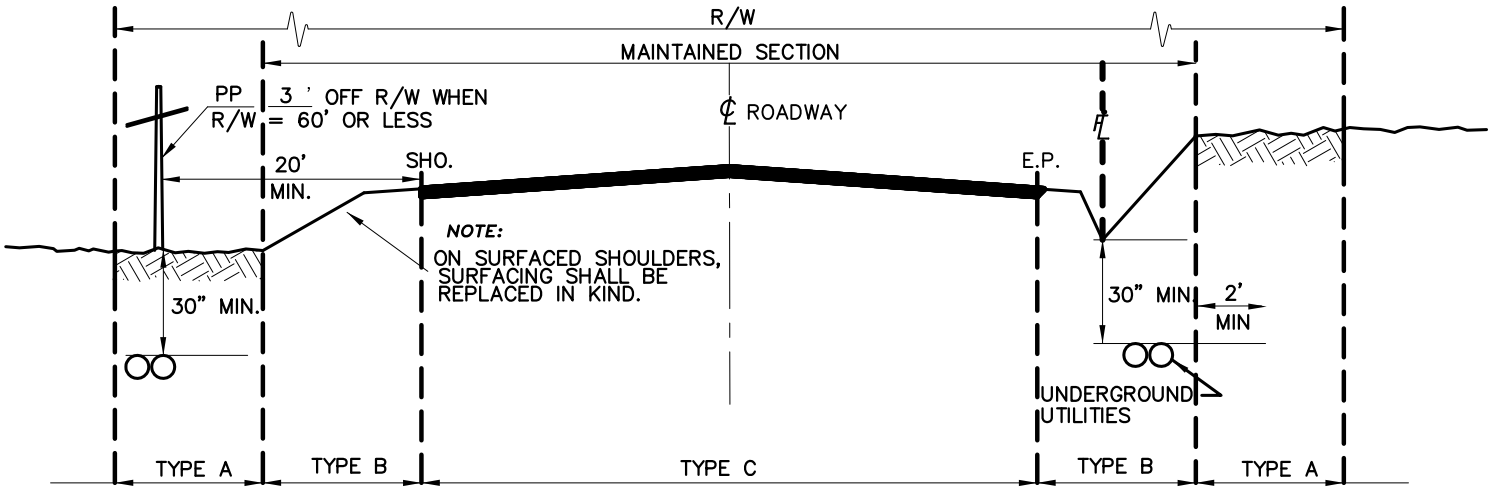

SECTION

CALL U.S.A.
1–800–227–2600
48 HRS. PRIOR TO WORKING.

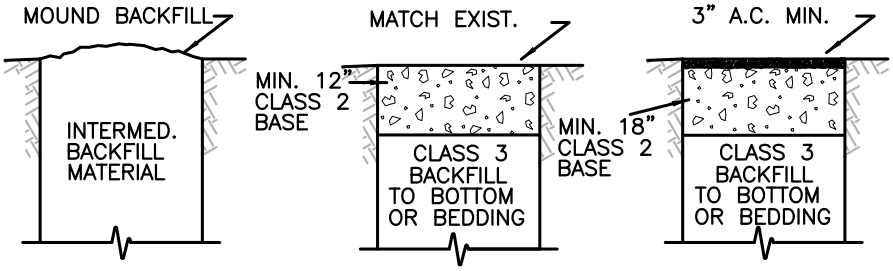

TYPE "A" *TYPE "B"* *TYPE "C"*

MATERIAL & COMPACTION REQUIREMENTS FOR TRENCH BACKFILL

1. TRENCH EDGES SHALL BE CLEAN CUT.
2. PIPE BEDDING MATERIAL AND BACKFILL MATERIAL SHALL CONFORM TO REQUIREMENTS OF THE UTILITY HAVING JURISDICTION OVER THE INSTALLATION, AND SHALL ALSO MEET THE REQUIREMENTS OF SECTION 19–3.0, "STRUCTURE EXCAVATION AND BACKFILL" OF THE STANDARD SPECIFICATIONS AS MODIFIED BELOW.
3. INTERMEDIATE BACKFILL SHALL BE ANY SUITABLE NATIVE OR IMPORTED GRANULAR MATERIAL. RELATIVE COMPACTION SHALL BE AT LEAST 95% WITH A MIN. S.E. OF 30.
4. CLASS #2 AGGREGATE BASE SHALL CONFORM TO THE STANDARD SPECIFICATIONS. MINIMUM RELATIVE COMPACTION SHALL BE 95%.
5. WHEN TRENCHES ARE BACKFILLED WITH GRANULAR MATERIALS, PROVISIONS MUST BE PROVIDED TO DRAIN OFF EXCESS WATER.
6. TRENCHING IS THE PRIMARY METHOD THAT SHALL BE PERMITTED WITHIN THE MAINTAINED SECTIONS OF RIGHT OF WAYS; HOWEVER, BORING MAY BE REQUIRED WHEN CROSSING EXISTING ROADWAYS. ALTERNATE METHODS MAY BE APPROVED BY THE DIRECTOR OF PUBLIC WORKS.
7. EXCESS MATERIAL FROM TRENCHING SHALL BE REMOVED AND DEPOSITED OFF OF THE ROADWAY RIGHT OF WAY.

NOTE:

1. CONTRACTOR SHALL SHORE ALL TRENCHES IN CONFORMANCE WITH STATE AND O.S.H.A. SAFETY REQUIREMENTS.

NOT TO SCALE

Public Works Director

TEHAMA COUNTY STANDARD PLANS

REV. NO.	DATE	BY		DATE
			UTILITY TRENCH DETAILS (TYPE "A", "B", AND "C")	1/07
				DWG. NO. 0959

TEHAMA COUNTY DEPT. OF ENVIRONMENTAL HEALTH

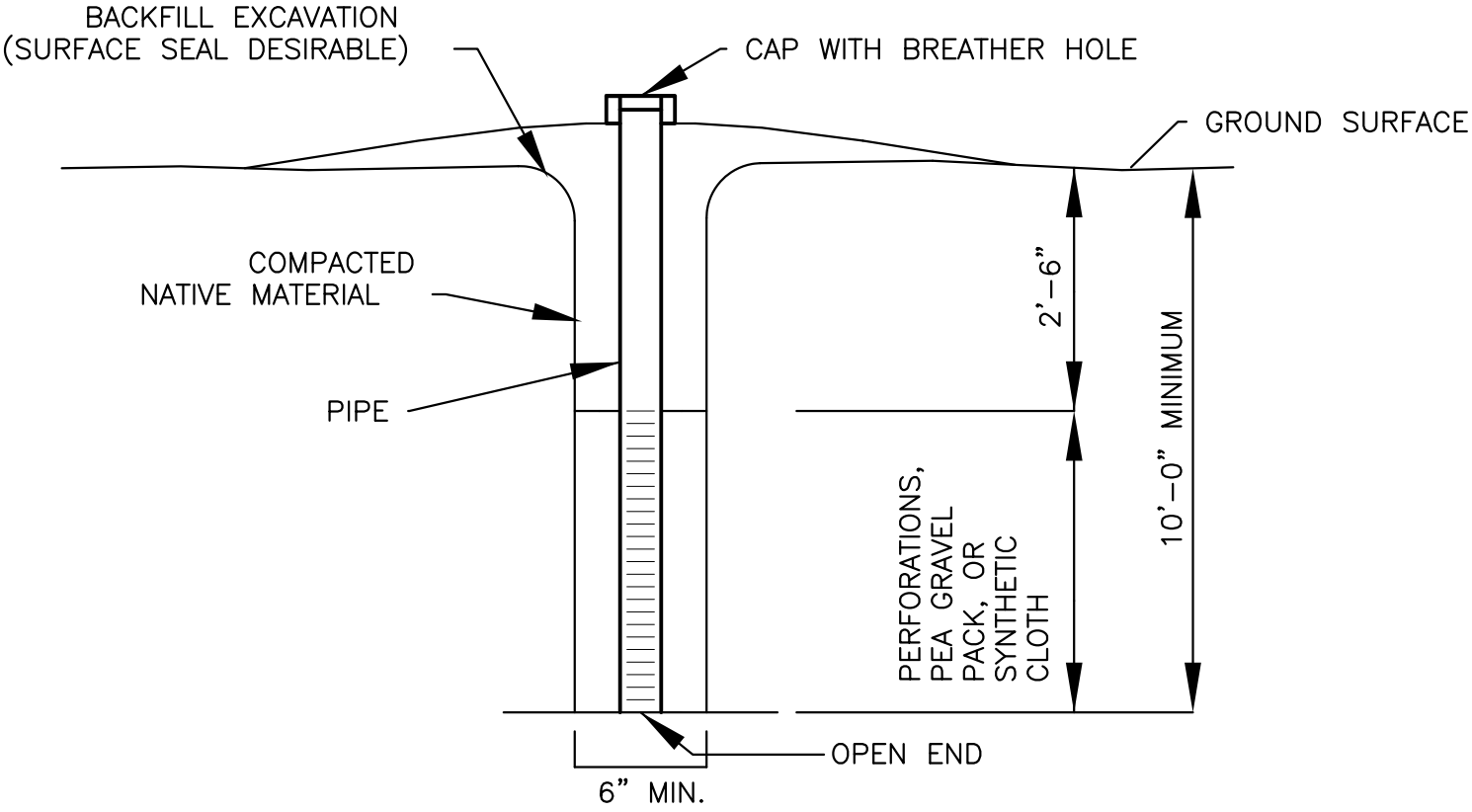

NOT TO SCALE

Public Works Director

TEHAMA COUNTY STANDARD PLANS

REV. NO.	DATE	BY		DATE
			GROUND WATER MONITORING WELL	1/07
				DWG. NO.
				0960

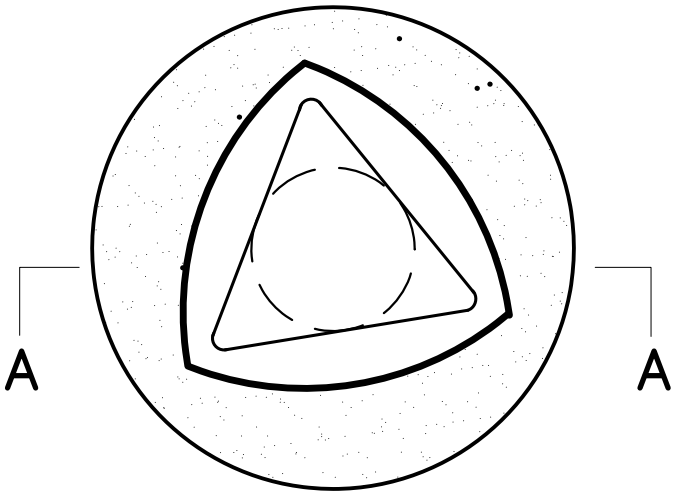

STREET MONUMENT
PLAN VIEW

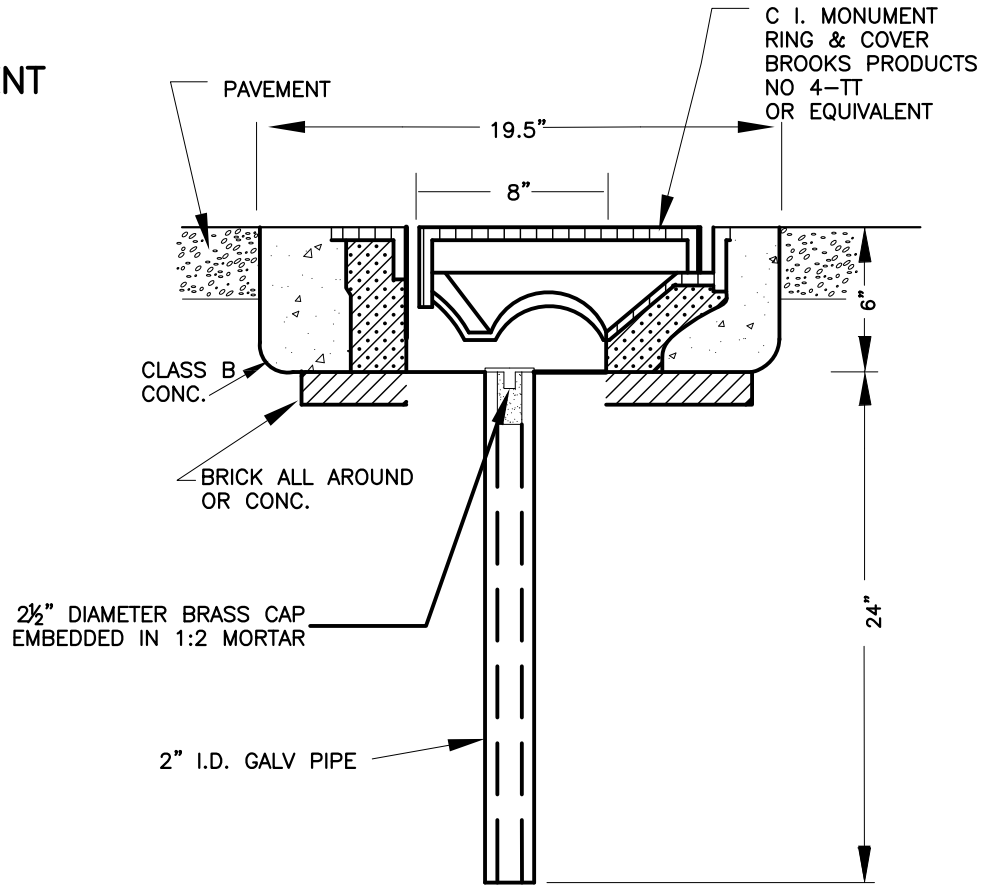

SECTION A–A

NOTE:

1. MONUMENTS SHALL BE SET AT THE LOCATIONS DESIGNATED ON THE PLANS AND ON THE FINAL MAP.
2. STREET MONUMENTS SHALL BE USED IN ALL PAVED AREAS AND OTHER LOCATIONS AS SHOWN ON THE PLANS.

NOT TO SCALE

Public Works Director

TEHAMA COUNTY STANDARD PLANS

REV. NO.	DATE	BY		DATE
			SURVEY MONUMENTS	1/07
				DWG. NO.
				0961

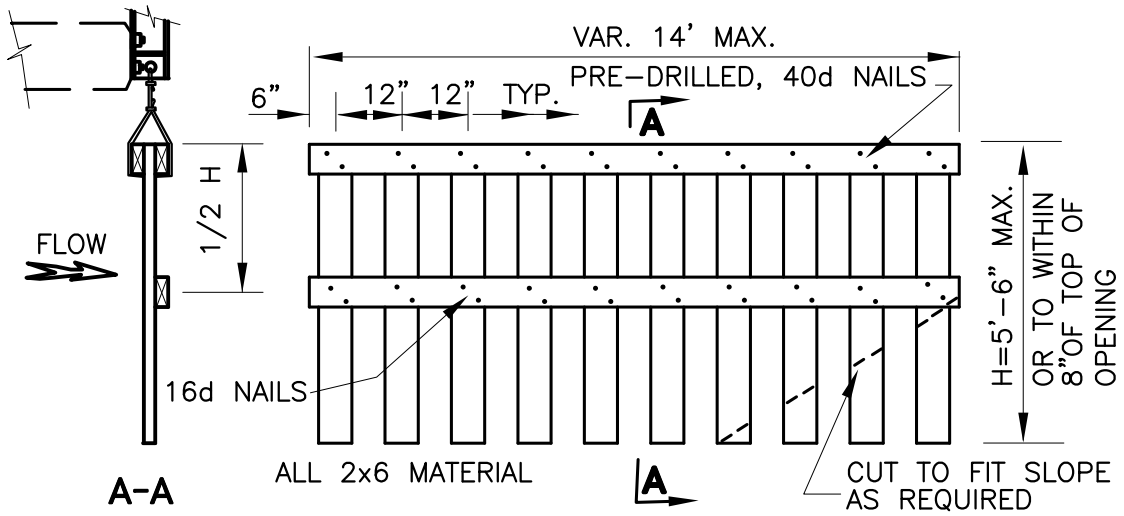

STANDARD PANEL

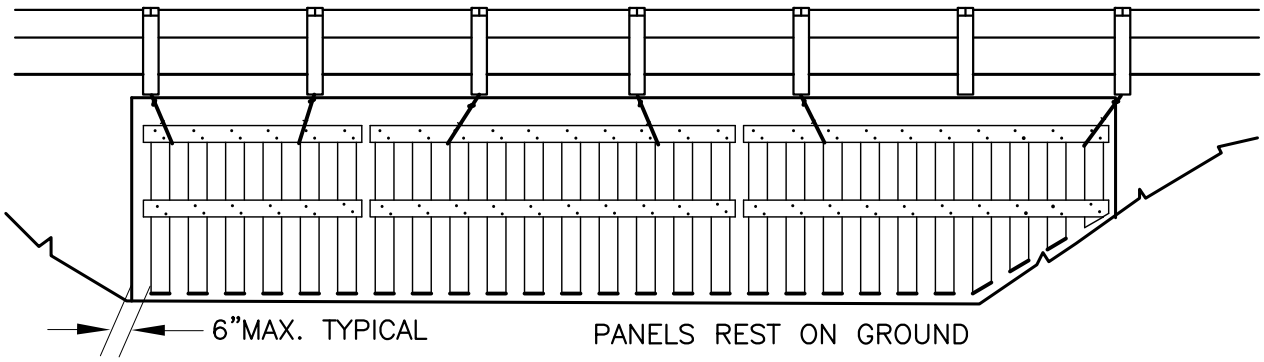

TYPICAL INSTALLATION
(ON STRUCTURES)

NOTES

1. ON STRUCTURES, CABLES SHALL BE SUPORTED BY A ONE INCH HOLE AT THE BOTTOM OF A DOWNSTREAM RAIL POST. HOLES ARE TO BE PREDRILLED AND GALVANIZED. A GALVANIZED FLAT BRACKET OF 1/2 INCH THICK STOCK MAY BE FABRICATED TO FIT A BOTTOM SUPPORT BOLT, OF THE RAIL POST, AS AN ALTERNATE.
2. FLOOD GATES FOR WATER GAPS WITHOUT A STRUCTURE SHALL BE SUPPORTED FROM A 5/8 INCH (MINIMUM) CABLE, ANCHORED TO EACH BANK.
3. NAILS SHALL BE GALVANIZED AND WOOD SHALL BE CONSTRUCTION GRADE DOUGLAS FIR, OR AS APPROVED.
4. INSTALLATION SHALL BE APPROVED BY THE DIRECTOR OF PUBLIC WORKS.

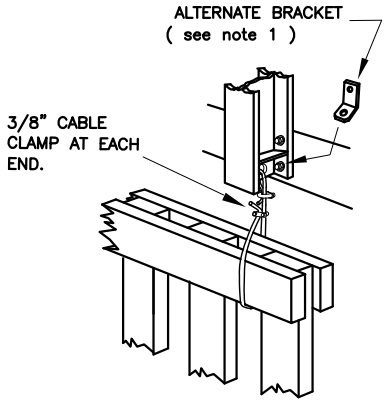

HANGING DETAIL

NOT TO SCALE

Public Works Director

TEHAMA COUNTY STANDARD PLANS

REV. NO.	DATE	BY		DATE
			FLOOD GATE FENCING	1/07
				DWG. NO. 0962

It is TCPW policy to permit mailboxes at safe locations that are convenient to mail carriers and at the same time not interfere with highway operations or signing. The following postal regulations apply to rural mail boxes:

Postal Manual

U.S. Postal Office Department Section 156.54--- Location

"Rural boxes must be placed so that they may be conveniently served by carriers without leaving their conveyances, and must be located on the right hand side of the road in the direction of travel of the carrier in all cases where traffic conditions are such that it would be dangerous for the carriers to drive to the left in order to reach the boxes, or where doing so would constitute a violation of traffic laws and regulations.

On new rural routes, all boxes must be located on the right of the road in the direction of travel of the carrier. Boxes must be placed to conform with State law and highway regulations. Customers must remove obstructions, including snow, that makes delivery difficult.

Supports of mailboxes should be breakaway. Generally, the wood support, if not with breakaway modification, should be no larger than 4"x4". Maximum diameter steel pipe, 1-1/2" I.D. Any other items are not acceptable.

Multiple box installation will require an encroachment permit. These also apply to newspaper boxes.

Additional shoulder area will be required per County Engineer. Contact Postal Service when Multiple Boxes are required.

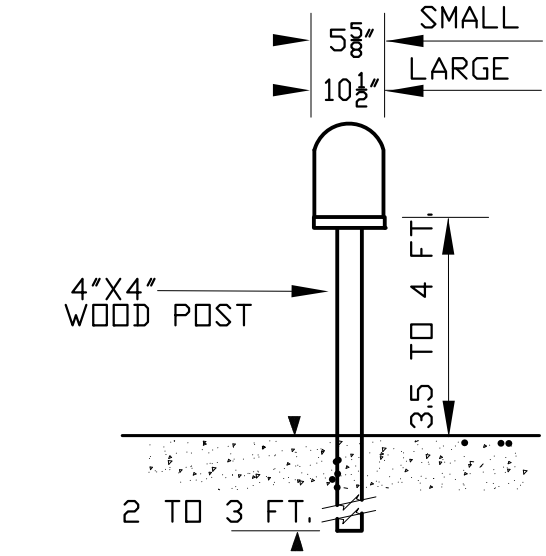

TYPICAL FRONT VIEW.

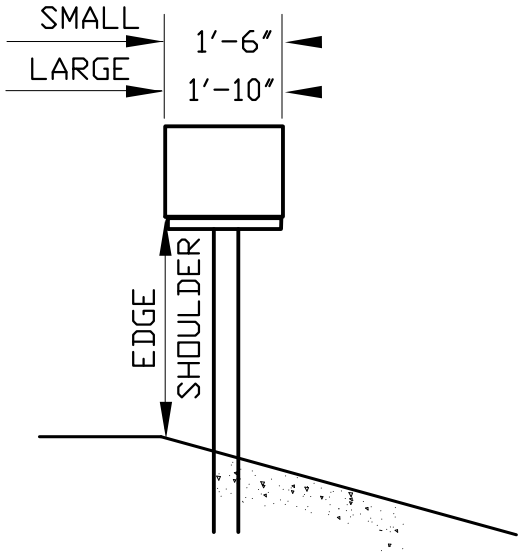

WITHOUT FLOW LINE.

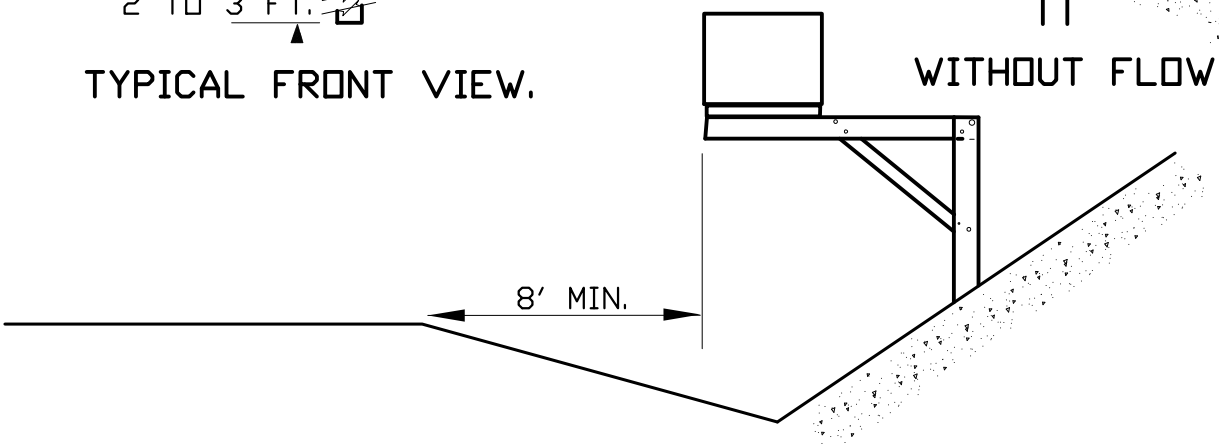

TYPICAL MAILBOX LOCATION WITH FLOW LINE.

Public Works Director

NOT TO SCALE

TEHAMA COUNTY STANDARD PLANS

REV. NO.	DATE	BY		DATE
			INDIVIDUAL MAILBOX INSTALLATION	1/07
				DWG. NO.
				0963

REV NO.	DATE:	SCALE:	PROJECT NAME	ENGINEER AND ADDRESS	SHEET NO.

NOTE:
ALL SHEETS SHALL HAVE A DEFINED SCALE, TITLE BLOCK, AND REVISION BLOCK IN ACCORDANCE WITH THESE STANDARDS (SEE ABOVE DRAWING).

Public Works Director

TEHAMA COUNTY STANDARD PLANS

REV. NO.	DATE	BY		DATE
			TYPICAL TITLE BLOCK AND BORDER	1/07
				DWG. NO.
				0964