COUNTY OF TEHAMA

DEPARTMENT OF PUBLIC WORKS

PROJECT PLANS FOR CONSTRUCTION ON

REEDS CREEK ROAD AT THE PINE CREEK BRIDGE

BRIDGE No. 08C-0379

FEDERAL AID BRIDGE REPLACEMENT

PROJECT No. 305411

TO BE SUPPLEMENTED BY STATE OF CALIFORNIA STD. PLANS DATED 2010

PROJECT LOCATION

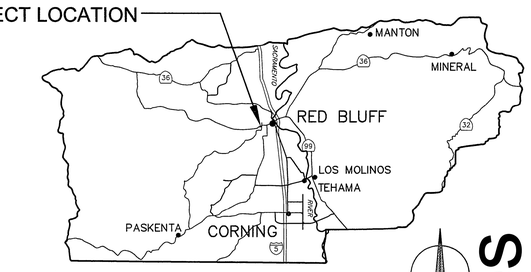

VICINITY MAP

N

LEGEND

AB	AGGRIGATE BASE
BC	BEGIN CURVE
BVC	BEGIN VERTICAL CURVE
CL	CENTERLINE
CMP	CORRUGATED METAL PIPE
D/W	DRIVEWAY
E	EXISTING
EC	END CURVE
EL	ELEVATION
EP	EDGE OF PAVEMENT
ETW	EDGE TRAVELED WAY
EVC	END VERTICAL CURVE
FG	FINISHED GRADE
FL	FLOWLINE
GB	GRADE BREAK
INV	INVERT
OG	ORIGINAL GRADE
OHU	OVER HEAD UTILITY
PC	POINT OF CURVATURE
PI	POINT OF INTRSECTION
PT	POINT OF TANGENCY
R	RADIAL
R/W	RIGHT OF WAY
RCP	REINFORCED CONCRETE PIPE
SHO	SHOULDER
SR2S	SAFE ROUTES TO SCHOOL
STA	STATION
TYP	TYPICAL
UG	UNDERGROUND
UP	UTILITY POLE
VC	VERTICAL CURVE

SYMBOLS

	FENCE LINE EXISTING
	FENCE LINE NEW
	FLOWLINE
	LIMITS OF CONSTRUCTION
	OVER HEAD UTILITY
	RIGHT OF WAY
	UNDERGROUND UTILITY
	CONTROL POINT
	UTILITY POLE

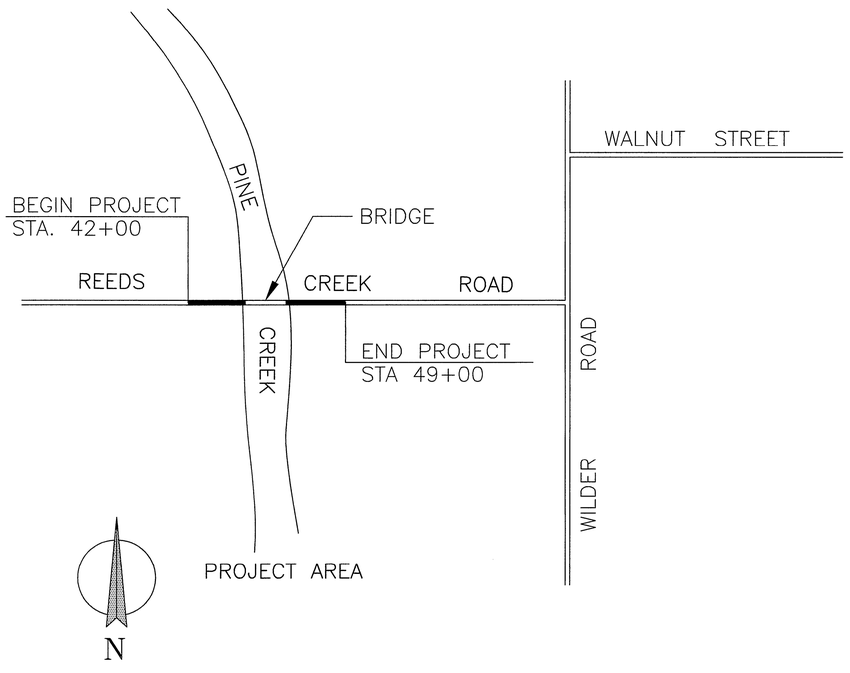

LENGTH OF PROJECT = 0.13 MILES

INDEX OF SHEETS

SHEET	DRAWING	DESCRIPTION
1	G-1	COVER SHEET
2	C-1	ROAD – TYPICAL SECTION, DETAILS
3	C-2	ROAD – PLAN AND PROFILE
4	C-3	ROAD – GUARD RAILING PLAN
5	C-4	ROAD – SIGNAGE AND STRIPING PLAN
6	C-5	ROAD – DETOUR PLAN
7	C-6	ROAD – EROSION CONTROL PLAN
8	S-1	BRIDGE – GENERAL PLAN
9	S-2	BRIDGE – DECK CONTOURS
10	S-3	BRIDGE – FOUNDATION PLAN
11	S-4	BRIDGE – ABUTMENT PLAN
12	S-5	BRIDGE – WING WALL DETAILS
13	S-6	BRIDGE – BENT DETAILS – 1
14	S-7	BRIDGE – BENT DETAILS – 2
15	S-8	BRIDGE – DECK DETAILS
16	S-9	BRIDGE – SLAB REINFORCEMENT DETAILS
17	S-10	BRIDGE – BRIDGE RAILING DETAILS
18	S-11	BRIDGE – ROCK SLOPE PROTECTION PLAN
19	S-12	BRIDGE – LOG OF TEST BORINGS
20	S-13	BRIDGE – LOG OF TEST BORINGS
21	S-14	BRIDGE – LOG OF TEST BORINGS

CONTROL

HORIZONTAL:
CALIFORNIA STATE PLANE ZONE 1
NORTH AMERICAN DATUM 1983 (NAD 83)

VERTICAL:
NORTH AMERICAN VERTICLE DATUM 1988 (NAVD 88)

CALL UTILITY NOTIFICATION CENTER OF CALIFORNIA

811

Know what's below. Call before you dig.

CALL 2 BUSINESS DAYS IN ADVANCE BEFORE YOU DIG, GRADE, OR EXCAVATE FOR THE MARKING OF UNDERGROUND MEMBER UTILITIES.

TEHAMA COUNTY BOARD OF SUPERVISORS

DISTRICT 1 STEVE CHAMBLIN
DISTRICT 2 CANDY CARLSON
DISTRICT 3 DENNIS GARTON
DISTRICT 4 BOB WILLIAMS
DISTRICT 5 BURT BUNDY

APPROVED BY:

CHAIRPERSON BOARD OF SUPERVISORS

BOARD OF SUPERVISORS TEHAMA COUNTY, CA

COUNTY SEAL

TEHAMA COUNTY DEPARTMENT OF PUBLIC WORKS

GARY ANTONE PE, PLS
DIRECTOR OF PUBLIC WORKS

REGISTERED PROFESSIONAL ENGINEER GARY B. ANTONE C 36077 CIVIL STATE OF CALIFORNIA

Not for Bidding Purposes

No.	REVISION:	BY:	DATE:

REGISTERED PROFESSIONAL ENGINEER KEITH A. ROSSER C 78389 CIVIL STATE OF CALIFORNIA

TEHAMA COUNTY PUBLIC WORKS
9380 San Benito Ave.
Gerber, Ca 96035
(530) 385-1462

SCALE	
HORIZ:	N/A
VERT:	N/A
DRAWN BY:	TAC
DATE:	2/18/2016
CHECKED BY:	KR / SF
DATE:	2/18/2016

REEDS CREEK ROAD AT PINE CREEK BRIDGE COVER SHEET

PROJECT NO.: 305411

SHEET NO. G-1

PAGE NO. 1/21

P:\305411 Reeds Crk Rd @ Pine Creek\DESIGN\Proposed\ReedsCrRdPineCr_1-29-15.dwg2/18/2016

ReedsCrRdPineCr_1-29-15.dwg

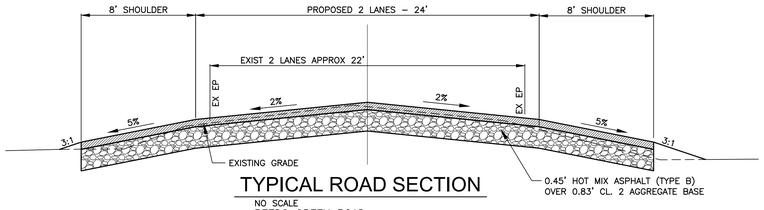

TYPICAL ROAD SECTION

NO SCALE
REEDS CREEK ROAD

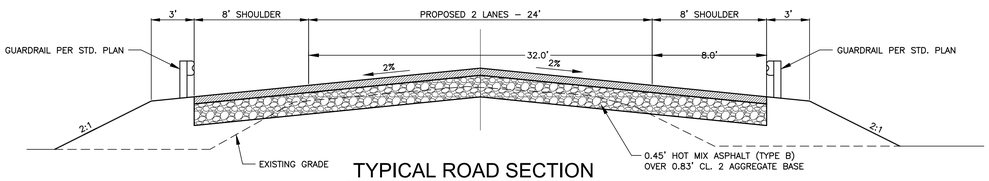

TYPICAL ROAD SECTION
GUARD RAIL @ HMA

NO SCALE
REEDS CREEK ROAD

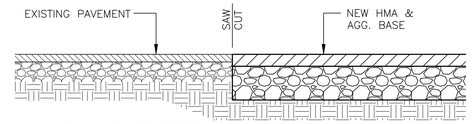

SAW CUT DETAIL

N.T.S.

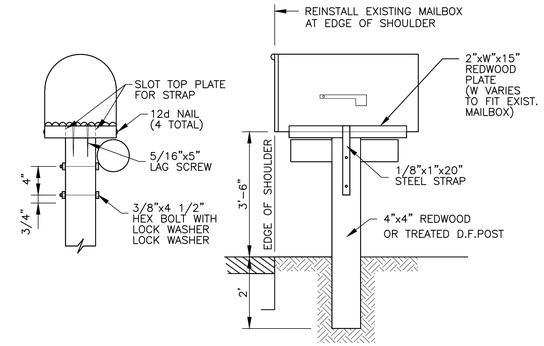

NOTE: Existing newspapaer boxes shall be fasten to the side of post, directly under the mailbox, by 2– # 12x2" wood screws

Mailbox to be installed per County Standard Plans, Drawing No. 0963.

MAILBOX INSTALLATION

MAILBOX RELOCATION			
	ORIGINAL LOCATION	RELOCATE TO	MAILBOXES
LINE	STATION		EA
	47+80	47+80	2
	49+18	49+18	1
	49+35	49+35	1
		TOTAL	4

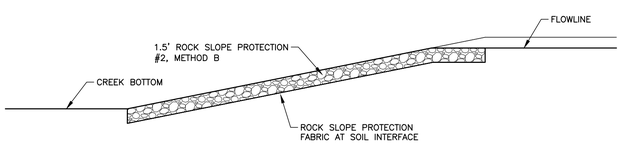

ROCK SLOPE PROTECTION SECTION

N.T.S.

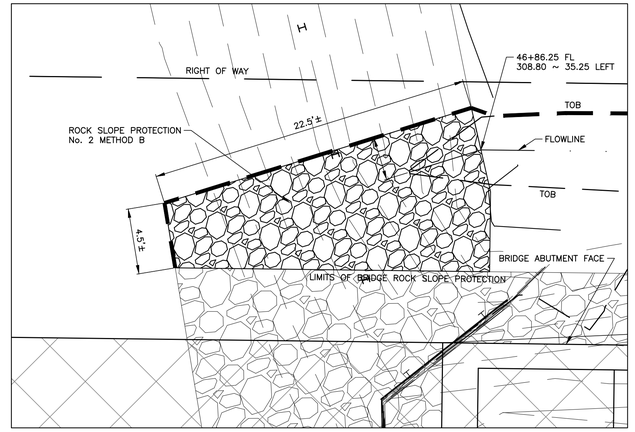

ROCK SLOPE PROTECTION, ROADWAY

1" = 5'

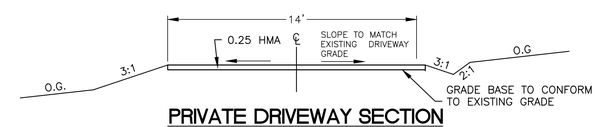

PRIVATE DRIVEWAY SECTION

N.T.S.

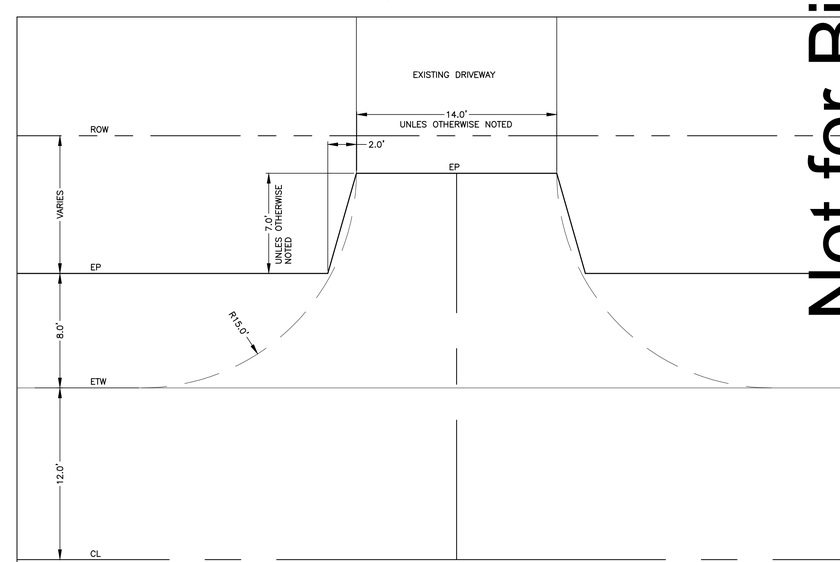

PRIVATE DRIVEWAY PLAN

N.T.S.

REEDS CREEK ROAD @ PINE CREEK BRIDGE - ROADWAY ITEMS																			
LOCATION	HOT MIX ASPHALT (TYPE B)	AGGREGATE BASE CLASS 2	ROADWAY EXCAVATION (GROSS)	ROADWAY FILL (GROSS)	IMPORT BORROW (NET)	SHOULDER BACKING	DOUBLE CHIP SEAL	REMOVE FENCE	FENCE (TYPE BW, METAL POST) TEMPORARY/RECONSTRUCT	TEMPORARY SILT FENCE	TEMPORARY FENCE (TYPE ESA)	INSTALL FENCE (TYPE WM, METAL POST)	EROSION CONTROL HYDROSEED	ROCK SLOPE PROTECTION No. 2 METHOD B, ROADWAY	16" METAL TUBE GATE	REMOVE 12" CULVERT	48" CMP CULVERT	24" CMP CULVERT	12" CMP CULVERT
LOCATION	CY	CY	CY	CY	CY	CY	SY	LF	LF	LF	LF	LF	SF	CY	EA	EA	LF	LF	LF
REEDS CREEK ROAD	579	969	912	479	0	79	0	587	336	606	1214	175	101270	10	1	2	0	34	74
CONVERTED UNITS	1175 TONS	1773 TONS				TONS													
DETOUR ITEMS																			
LOCATION	CY	CY	CY	CY	CY	CY	SY	LF	LF	LF	LF	LF	SF	CY	EA	EA	LF	LF	LF
TEMPORARY DETOUR	0	477	9	922	913	0	2384	0	0	0	0	0	0	0	0	0	192	0	0
CONVERTED UNITS		873 TONS																	

Not for Bidding Purposes

No.	REVISION:	BY:	DATE:

REGISTERED PROFESSIONAL ENGINEER
KEITH H. MOSSER
C 78369
CIVIL
STATE OF CALIFORNIA

TEHAMA COUNTY
PUBLIC WORKS
9380 San Benito Ave.
Gerber, Ca 96035
(530) 385–1462

COUNTY OF TEHAMA

HORIZ:	NOTED
VERT:	N/A
SCALE	
DRAWN BY:	TAC
DATE:	2/18/2016
CHECKED BY:	KR / SF
DATE:	2/18/2016

REEDS CREEK ROAD
AT PINE CREEK BRIDGE
TYPICAL SECTION & DETAILS

PROJECT NO.: 305411

SHEET NO. C-1

PAGE NO. 2/21

P:\305411 Reeds Crk Rd @ Pine Creek\DESIGN\Proposed\ReedsCrRdPineCr_1-29-15.dwg3/4/2016

ReedsCrRdPineCr_1-29-15.dwg

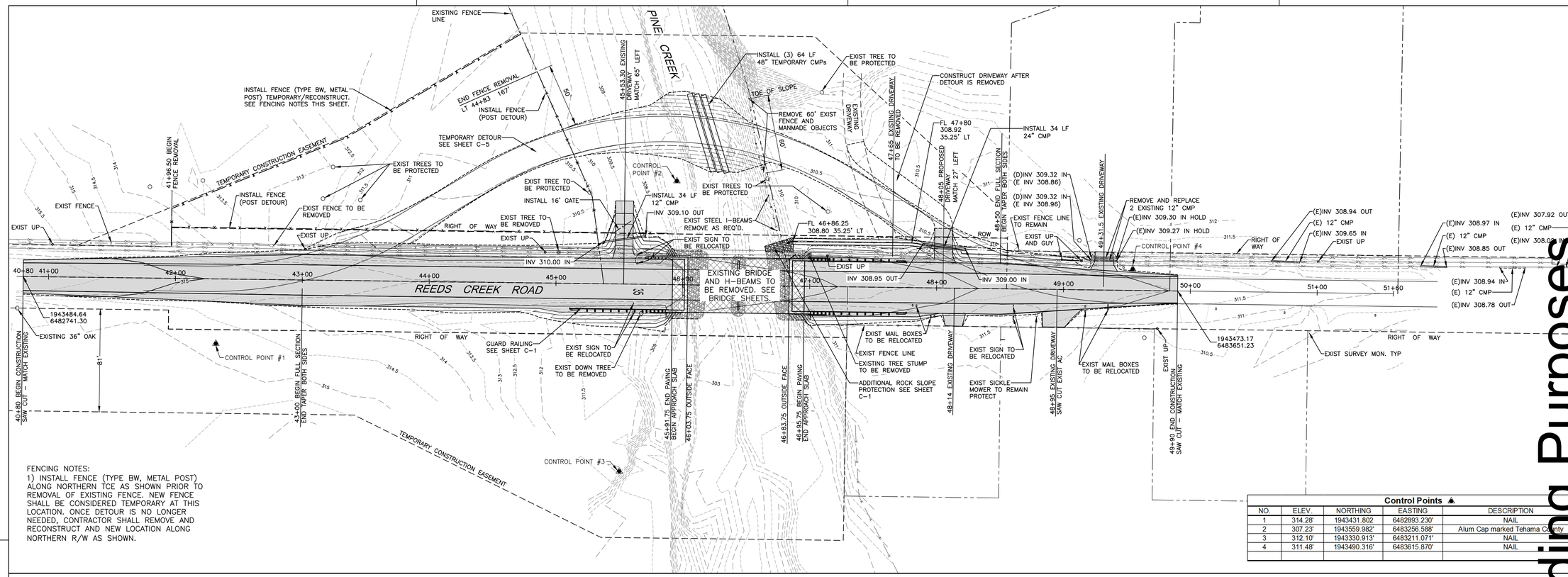

FENCING NOTES:
1) INSTALL FENCE (TYPE BW, METAL POST) ALONG NORTHERN TCE AS SHOWN PRIOR TO REMOVAL OF EXISTING FENCE. NEW FENCE SHALL BE CONSIDERED TEMPORARY AT THIS LOCATION. ONCE DETOUR IS NO LONGER NEEDED, CONTRACTOR SHALL REMOVE AND RECONSTRUCT AND NEW LOCATION ALONG NORTHERN R/W AS SHOWN.

Control Points

NO.	ELEV.	NORTHING	EASTING	DESCRIPTION
1	314.28'	1943431.802	6482893.230'	NAIL
2	307.23'	1943559.982'	6483256.588'	Alum Cap marked Tehama County
3	312.10'	1943330.913'	6483211.071'	NAIL
4	311.48'	1943490.316'	6483615.870'	NAIL

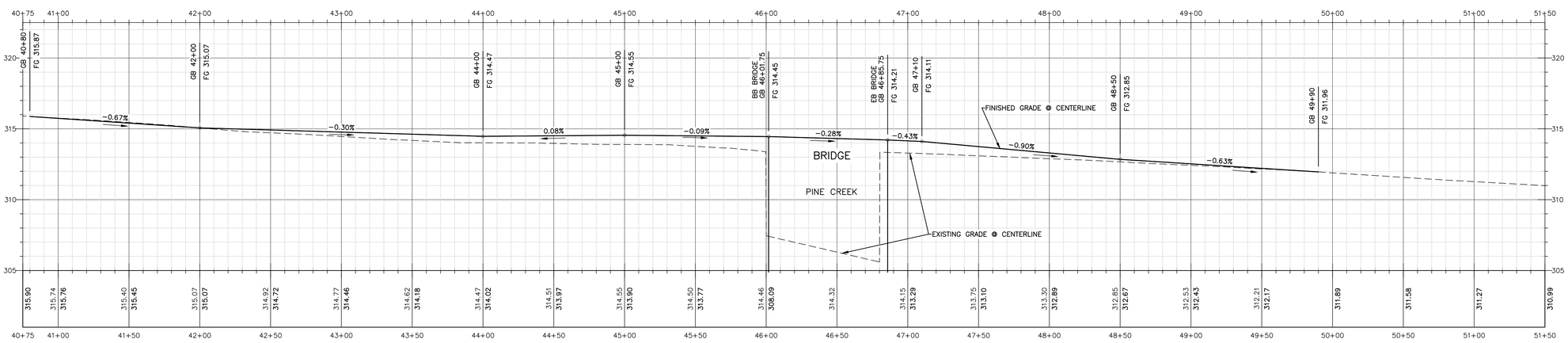

0 20 40 80
SCALE: 1" = 40'

N

CALL UTILITY NOTIFICATION CENTER OF CALIFORNIA
811
Know what's below.
Call before you dig.
CALL 2 BUSINESS DAYS IN ADVANCE BEFORE YOU DIG, GRADE, OR EXCAVATE FOR THE MARKING OF UNDERGROUND MEMBER UTILITIES.

Not for Bidding Purposes

No.	REVISION:	BY:	DATE:

REGISTERED PROFESSIONAL ENGINEER
JAMES ROSSER
C 78359
CIVIL
STATE OF CALIFORNIA

TEHAMA COUNTY PUBLIC WORKS
9380 San Benito Ave.
Gerber, Ca 96035
(530) 385-1462
COUNTY OF TEHAMA

SCALE	
HORIZ:	1" = 40'
VERT:	1" = 4'
DRAWN BY:	TAC
DATE:	2/18/2016
CHECKED BY:	KR / SF
DATE:	2/18/2016

REEDS CREEK ROAD
AT PINE CREEK BRIDGE
PLAN AND PROFILE

PROJECT NO.: 305411

SHEET NO.	PAGE NO.
C-2	3/21

P:\305411 Reeds Crk Rd @ Pine Creek\DESIGN\Proposed\ReedsCrRdPineCr_1-29-15.dwg3/4/2016
ReedsCrRdPineCr_1-29-15.dwg

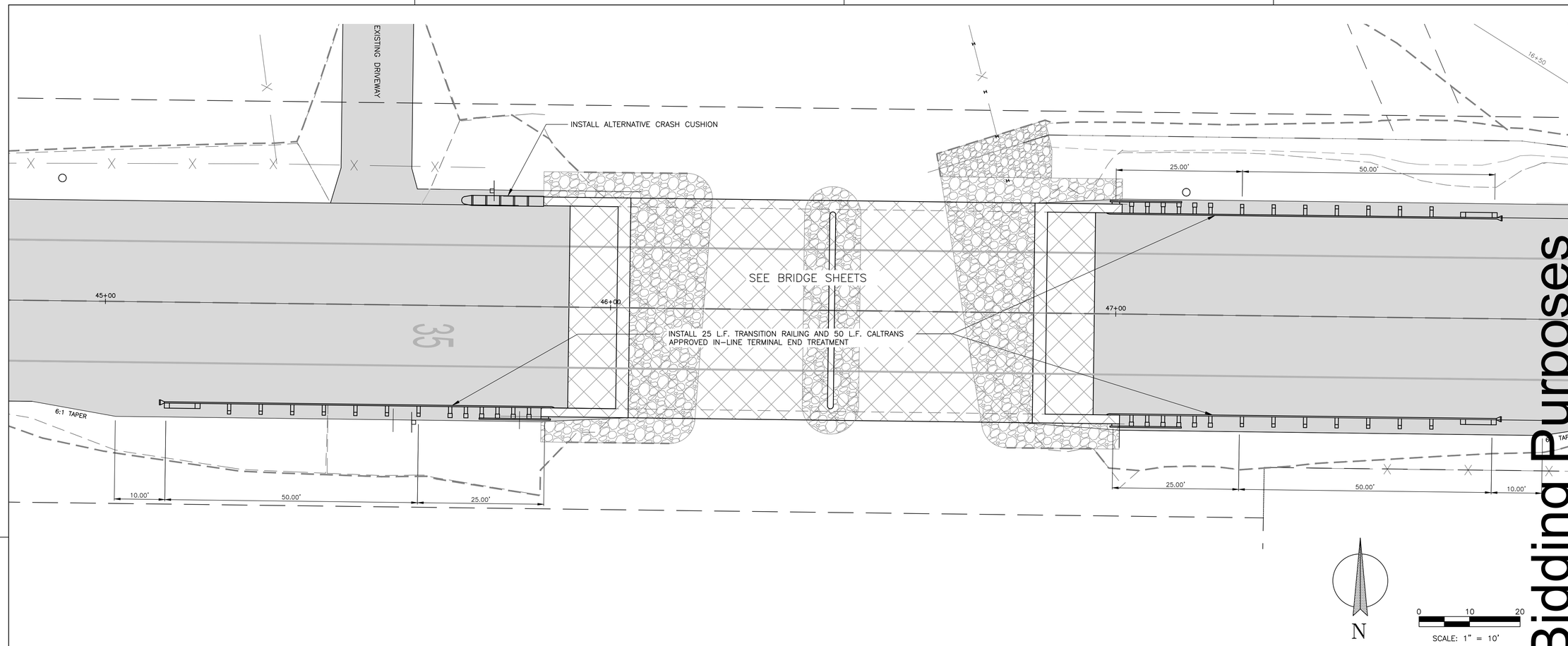

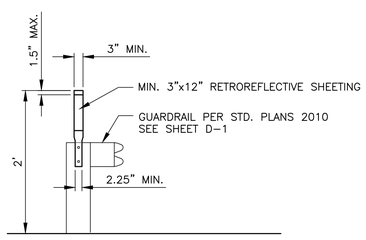

GUARD RAILING DELINEATOR DETAIL
N.T.S.
(FLEXIBLE POST)

GUARDRAIL ITEMS

STATION START	DESCRIPTION	RT/LT	EA
45+12	TERMINAL SECTION	RT	1
45+62	TRANSITION RAILING	RT	1
45+70	ALTERNATIVE CRASH CUSHION	LT	1
47+01	TRANSITION RAILING	RT	1
47+26	TERMINAL SECTION	RT	1
47+01	TRANSITION RAILING	LT	1
47+26	TERMINAL SECTION	LT	1
		TOTAL	7

Not for Bidding Purposes

CALL UTILITY NOTIFICATION CENTER OF CALIFORNIA

811

Know what's **below.**
Call before you dig.

CALL 2 BUSINESS DAYS IN ADVANCE BEFORE YOU DIG, GRADE, OR EXCAVATE FOR THE MARKING OF UNDERGROUND MEMBER UTILITIES.

No.	REVISION:	BY:	DATE:

REGISTERED PROFESSIONAL ENGINEER
JAMES ROSSER
C 78359
CIVIL
STATE OF CALIFORNIA

TEHAMA COUNTY
PUBLIC WORKS
9380 San Benito Ave.
Gerber, Ca 96035
(530) 385-1462

COUNTY OF TEHAMA

SCALE	
HORIZ:	1" = 10'
VERT:	N/A
DRAWN BY:	TAC
DATE:	2/18/2016
CHECKED BY:	KR / SF
DATE:	2/18/2016

REEDS CREEK ROAD AT PINE CREEK BRIDGE GUARD RAILING PLAN

PROJECT NO.: 305411

SHEET NO.	PAGE NO.
C-3	4/21

P:\305411 Reeds Crk Rd @ Pine Creek\DESIGN\Proposed\ReedsCrRdPineCr_1-29-15.dwg3/4/2016

ReedsCrRdPineCr_1-29-15.dwg

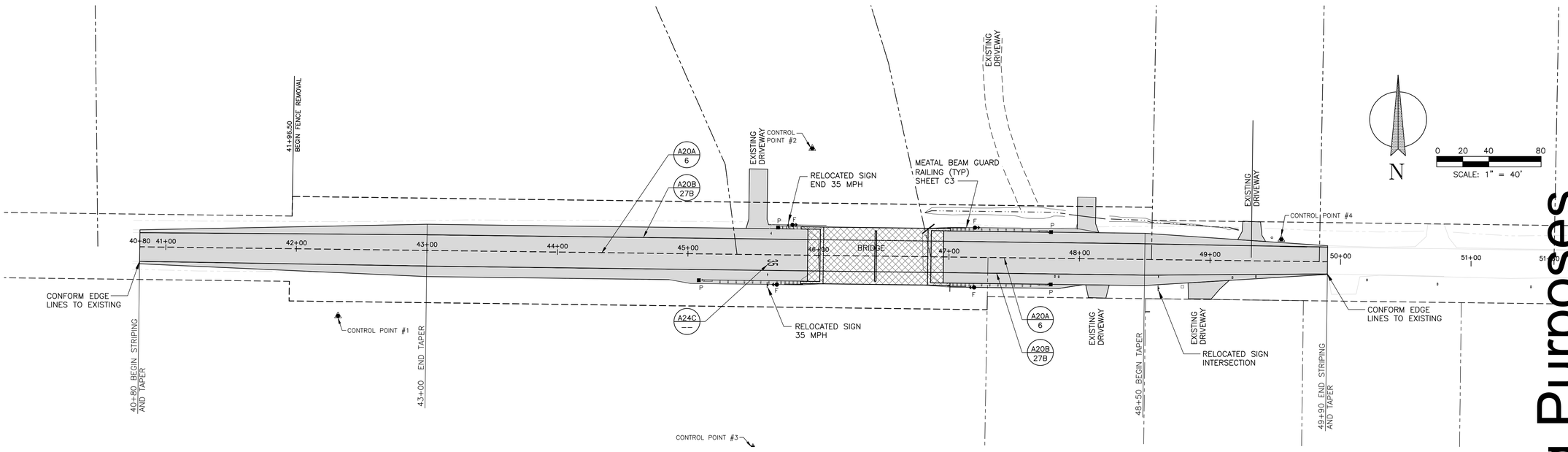

LEGEND

PER STATE OF CALIFORNIA STANDARD PLANS 2010

- A20A 6 — 4" DASHED YELLOW CENTERLINE
- A20B 27B — 4" SOLID WHITE EDGELINE
- A24C -- — NUMERIC PAVEMENT MARKINGS AS NOTED ON PLAN
- SIGN AS NOTED
- F — DELINEATOR – TYPE F
- P — OBJECT MARKER – TYPE P

STRIPE, MARKERS AND DELINEATORS							
LOCATION	TRAFIC STRIPES		PAVEMENT MARKERS		OBJECT MARKERS	DELINEATORS	CHANNELIZERS
	DETAIL 6 LF	DETAIL 27B LF	35 MPH SF	TYPE D EA	TYPE P EA	TYPE F EA	
REEDS CREEK RD	910	1820	17	20	4	4	0
DETOUR	0	0	0	0	0	0	72
TOTALS	910	1820	17	20	4	4	72

RELOCATE ROADSIDE SIGN				
			2" UNISTRUT BASE	RELOCATE ONE POST
SIGN	CODE	INCHES	EA	EA
35 MPH	R2R	EXIST	1	1
END 35 MPH	R3R	EXIST	1	1
INTERSECTION	W7R	EXIST	1	1
		TOTAL	3	3

NOTES

1. STRIPING DETAIL NUMBERS SHALL COMPLY WITH CALTRANS STANDARD PLANS 2010. REFER TO STANDARD PLANS A20A – A20D.
2. PAVEMENT MARKINGS AND SYMBOLS SHALL COMPLY WITH CALTRANS STANDARD PLANS 2010.
3. ALL SIGNING AND STRIPING SHALL COMPLY WITH THE 2014 CA–MUTCD, OR NEWER VERSION.
4. ALL DELINEATORS SHALL BE POSITIONED 2' TO 3' OFF THE EDGE OF PAVED SHOULDER UNLESS INSTALLED ON GUARDRAIL OR AS NOTED ON PLAN.

Not for Bidding Purposes

CALL UTILITY NOTIFICATION CENTER OF CALIFORNIA

811 Know what's below. Call before you dig.

CALL 2 BUSINESS DAYS IN ADVANCE BEFORE YOU DIG, GRADE, OR EXCAVATE FOR THE MARKING OF UNDERGROUND MEMBER UTILITIES.

No.	REVISION:	BY:	DATE:

REGISTERED PROFESSIONAL ENGINEER KEVIN S. ROSSER C 78389 CIVIL STATE OF CALIFORNIA

TEHAMA COUNTY PUBLIC WORKS

9380 San Benito Ave.
Gerber, Ca 96035
(530) 385–1462

COUNTY OF TEHAMA

SCALE	
HORIZ:	1" = 40
VERT:	N/A
DRAWN BY:	TAC
DATE:	2/18/2016
CHECKED BY:	KR / SF
DATE:	2/18/2016

REEDS CREEK ROAD AT PINE CREEK BRIDGE SIGNAGE AND STRIPING PLAN

PROJECT NO.: 305411

SHEET NO. C-4

PAGE NO. 5/21

P:\305411 Reeds Crk Rd @ Pine Creek\DESIGN\Proposed\ReedsCrRdPineCr_1-29-15.dwg3/4/2016

ReedsCrRdPineCr_1-29-15.dwg

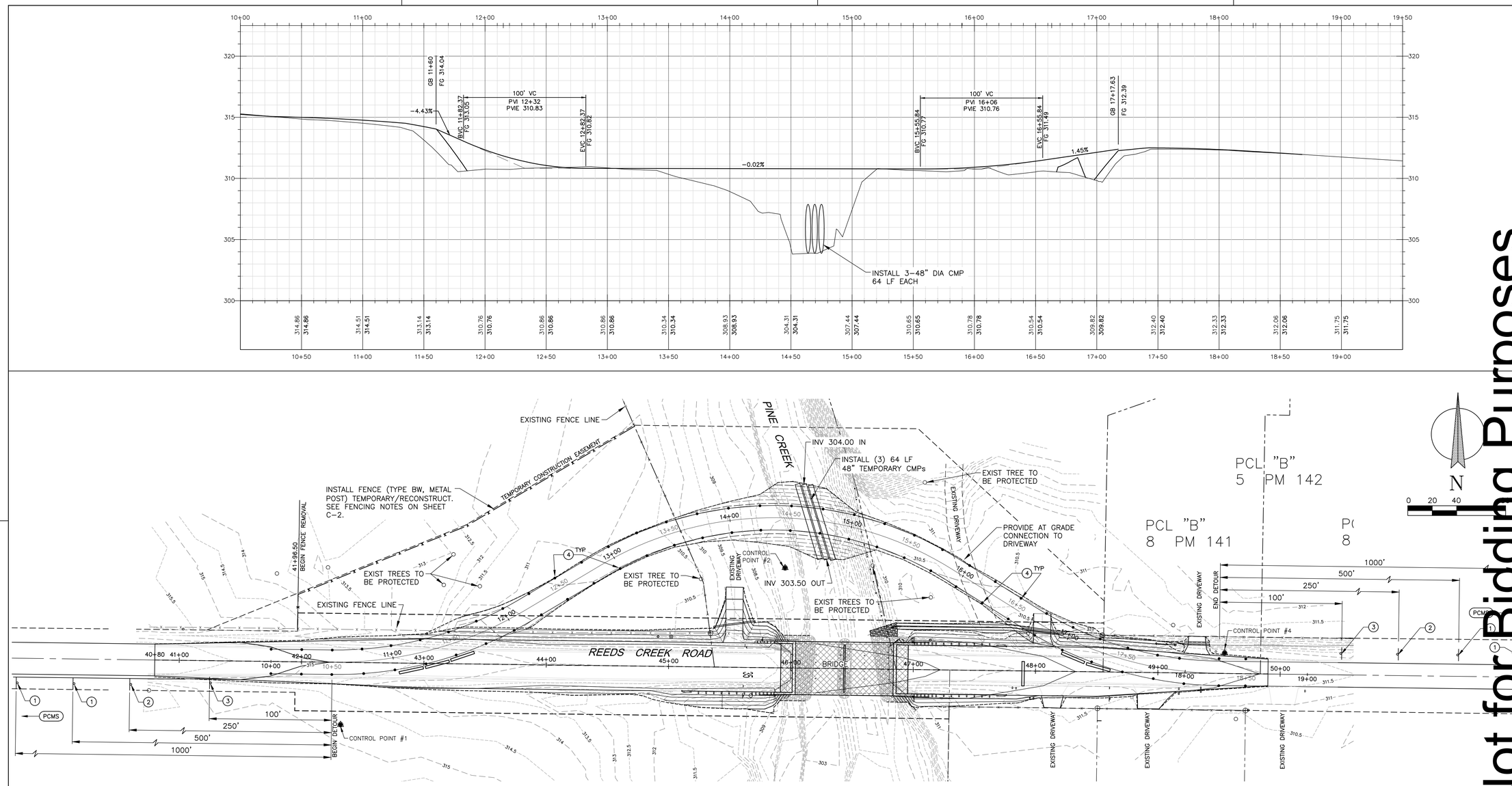

NOTES:

1. ALL TEMPORARY TRAFFIC CONTROL SHALL COMPLY WITH THE CURRENT VERSION OF THE MUTCD-CA.
2. ALL NECESSARY SIGNS SHALL BE IN PLACE BEFORE THE DETOUR ROUTE IS OPEN TO TRAFFIC.
3. DEPENDING ON WORK ACTIVITY WITHIN THE WORK ZONE, TRAFFIC MAY BE TEMPORARILY CONTROLED BY DIFFERENT METHODS SUCH AS (BUT NOT LIMITED TO) STOP, YIELD, FLAGGED OR OTHER AS REQUIRED.
4. CONSTRUCTION LIMITS OF DETOUR ARE FROM ROADWAY STA 40+80 TO 49+50
5. LOW HANGING TREE BRANCHES ALONG THE DETOUR SHALL BE TRIMMED AS DIRECTED IN THE FIELD. REFER TO CLEARING AND GRUBBING SPECIFICATION FOR ADDITION INFORMATION.

LEGEND

- PORTABLE CHANNELIZER
- SIGN AS NOTED

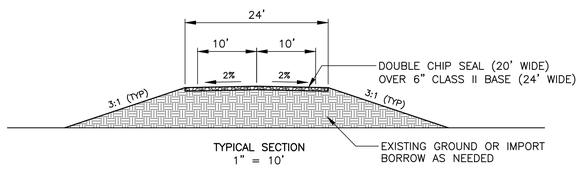

TYPICAL SECTION
1" = 10'

LEGEND

SYMBOLS	SIGN TYPE	DESCRIPTION	NOTES
1	W20-2	DETOUR 1000FT AND 500FT	PLACE SIGNS 500 FT AND 1000 FT AHEAD OF DETOUR.
2	W8-3	PAVEMENT ENDS	PLACE SIGNS 250 FT AHEAD OF PAVEMENT END.
3	W24-1 C17(CA) FRONT	ROAD WORK SPEED LIMIT 15 MPH	SIGNS SHALL INDICATE DIRECTION OF DETOUR. PLACE SIGNS 100 FT AHEAD OF DETOUR.
4	--	PORTABLE CHANNELIZER	PLACE CHANNELIZERS ON BOTH SIDES OF DETOUR AT 25 FOOT O.C. SPACING.
PCMS	--	PORTABLE CHANGEABLE MESSAGE SIGN	PLACE PCMS AS DIRECTED BY ENGINEER.
	--	TYPE K TEMPORARY RAILING	PLACE K RAIL AS SHOWN. RAILING SHALL HAVE REFLECTIVE DELINEATORS. REFER TO THE CURRENT VERSION OF THE MUTCD-CA.

CALL UTILITY NOTIFICATION CENTER OF CALIFORNIA
811
Know what's below. Call before you dig.
CALL 2 BUSINESS DAYS IN ADVANCE BEFORE YOU DIG, GRADE, OR EXCAVATE FOR THE MARKING OF UNDERGROUND MEMBER UTILITIES.

Not for Bidding Purposes

No.	REVISION:	BY:	DATE:

REGISTERED PROFESSIONAL ENGINEER KEVIN S. ROSSER C 78389 CIVIL STATE OF CALIFORNIA

TEHAMA COUNTY PUBLIC WORKS
9380 San Benito Ave.
Gerber, Ca 96035
(530) 385-1462

COUNTY OF TEHAMA

SCALE: HORIZ: 1" = 40' VERT: 1" = 4'
DRAWN BY: TAC DATE: 2/18/2016
CHECKED BY: KR / SF DATE: 2/18/2016

REEDS CREEK ROAD AT PINE CREEK BRIDGE DETOUR PLAN

PROJECT NO.: 305411

SHEET NO. C-5 PAGE NO. 6/21

P:\305411 Reeds Crk Rd @ Pine Creek\DESIGN\Proposed\ReedsCrRdPineCr_1-29-15.dwg3/4/2016
ReedsCrRdPineCr_1-29-15.dwg

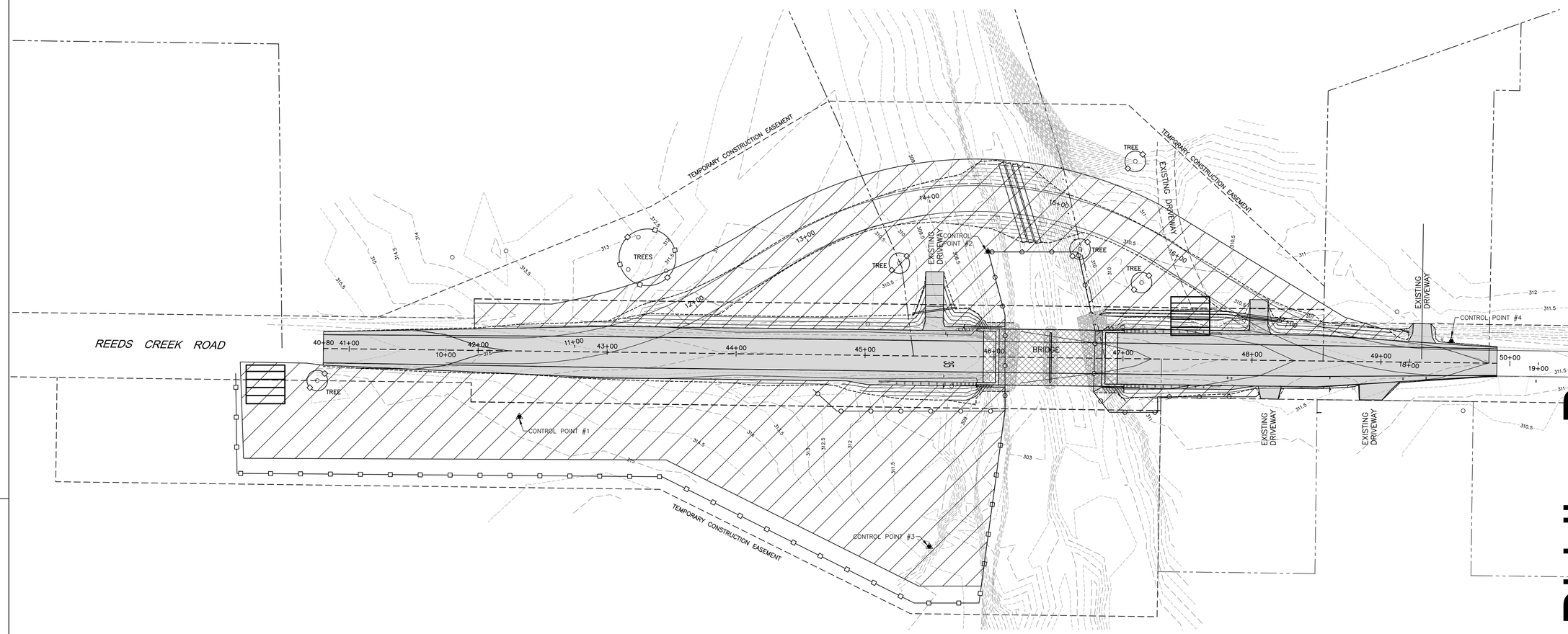

LEGEND

- TEMPORARY CONSTRUCTION ENTRANCE
- EROSION CONTROL (HYDROSEED)
- TEMPORARY FENCE (TYPE ESA)
- TEMPORARY SILT FENCE

NOTES:

1. REFER TO SECTION 13 OF THE BID BOOK FOR WATER POLLUTION CONTROL REQUIREMENTS.

2. THIS EROSION CONTROL EXHIBIT IS INTENDED AS A VISUAL SUPPLEMENT TO THE PROJECT SWPPP, WHICH IS TO BE PREPARED BY PROJECT CONTRACTOR. THE PREPARED SWPPP FOR THIS PROJECT SHALL BE USED FOR EROSION AND SEDIMENT CONTROL.

3. THIS EXHIBIT IS SCHEMATIC IN NATURE. AS SUCH, GRAPHICAL SYMBOLS ARE NOT TO SCALE, NOR ARE THEY NECESSARILY SHOWN THEIR EXACT LOCATION.

4. THIS EROSION CONTROL PLAN SERVES ONLY AS A GUIDELINE TO THE CONTRACTOR. STAGING/PHASING OF THE BMPS SHOWN ON THIS PLAN IS EXPECTED. ADDITIONAL AND/OR DIFFERENT BMPS FROM THOSE SHOWN MAY BE NECESSARY DURING CONSTRUCTION AS REQUIRED. IN NO WAY SHALL THIS PLAN REPLACE THE CONTRACTOR'S OBLIGATIONS FOR PERMITTING OR COMPLIANCE WITH GOVERNING AUTHORITIES. IT SHALL BE THE RESPONSIBILITY OF THE CONTRACTOR (OR PERMIT HOLDER) TO ENSURE EROSION CONTROL MEASURES ARE PROPERLY MAINTAINED AND FOLLOWED.

5. CONTRACTOR TO INSTALL APPROPRIATE BMPS DURING CERTAIN PHASES OF CONSTRUCTION.

6. IN ADDITION TO COMPLYING WITH ALL COUNTY, STATE, AND FEDERAL REQUIREMENTS; CONTRACTOR SHALL ALSO TAKE EXTRA CARE AND PREVENTATIVE MEASURES DUE TO THE ADJACENCY OF EXISTING OCCUPIED DWELLING UNITS AND BUSINESSES.

7. PRIOR TO ANY GRADING OR CONSTRUCTION, THE CONTRACTOR SHALL SET UP TREE PROTECTION WHERE SHOWN.

8. ALL EQUIPMENT AND STAGING SHALL REMAIN OUTSIDE THE DRIPLINE AND AVOIDE CONTACT WITH ANY PART OF A PROTECTED TREE.

9. ALL SOLIVENTS, FUELS AND CONSTRUCTION DEBRIS SHALL BE KEPT OUTSIDE OF THE TREE PROTECTION ZONE.

EROSION CONTROL QUANTITIES

ITEM	UNIT	AMOUNT
TEMPORARY CONSTRUCTION ENTRANCE	EA	2
EROSION CONTROL (HYDROSEED)	SF	101270
TEMPORARY FENCE (TYPE ESA)	LF	1270
TEMPORARY SILT FENCE	LF	606

N

0 20 40 80

SCALE: 1" = 40'

CALL UTILITY NOTIFICATION CENTER OF CALIFORNIA

811

Know what's **below.**
Call before you dig.

CALL 2 BUSINESS DAYS IN ADVANCE BEFORE YOU DIG, GRADE, OR EXCAVATE FOR THE MARKING OF UNDERGROUND MEMBER UTILITIES.

Not for Bidding Purposes

No.	REVISION:	BY:	DATE:

REGISTERED PROFESSIONAL ENGINEER
JAMES ROSSER
C 78359
CIVIL
STATE OF CALIFORNIA

TEHAMA COUNTY
PUBLIC WORKS
9380 San Benito Ave.
Gerber, Ca 96035
(530) 385-1462

COUNTY OF TEHAMA

SCALE	
HORIZ:	1" = 40
VERT:	N/A
DRAWN BY:	TAC
DATE:	2/18/2016
CHECKED BY:	KR / SF
DATE:	2/18/2016

REEDS CREEK ROAD AT PINE CREEK BRIDGE ERROSION CONTROL PLAN

PROJECT NO.: 305411

SHEET NO. C-6

PAGE NO. 7 / 21

P:\305411 Reeds Crk Rd @ Pine Creek\DESIGN\Proposed\ReedsCrRdPineCr_1-29-15.dwg3/4/2016

ReedsCrRdPineCr_1-29-15.dwg

DIST	COUNTY	ROUTE	POST MILES TOTAL PROJECT	SHEET No	TOTAL SHEETS
2	TEH	CR		8	21

REGISTERED STRUCTURAL ENGINEER — DATE 4/23/2015

PLANS APPROVAL DATE

The State of California or its officers or agents shall not be responsible for the accuracy or completeness of scanned copies of this plan sheet.

REGISTERED PROFESSIONAL ENGINEER — STEPHEN C. BURNS — No. S4229 — Exp. 6/30/16 — STRUCTURAL — STATE OF CALIFORNIA

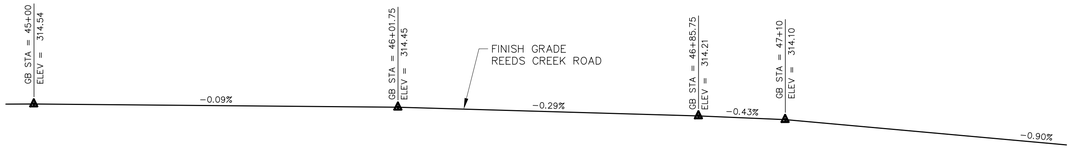

PROFILE GRADE

SCALE: 1"=20'

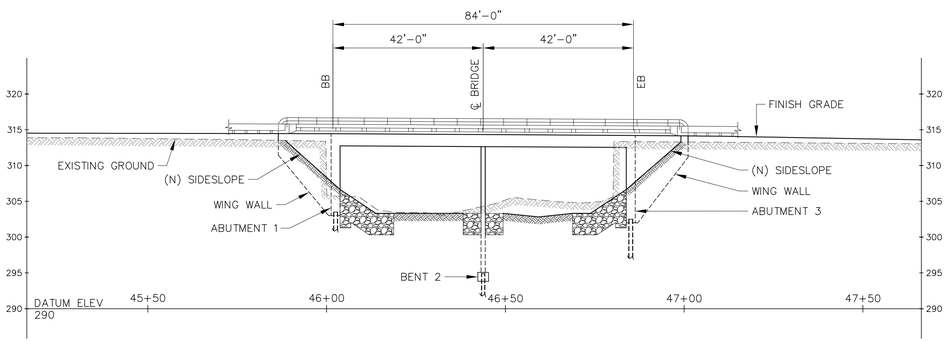

ELEVATION

SCALE: H= 1"=20', V= 1"=10'

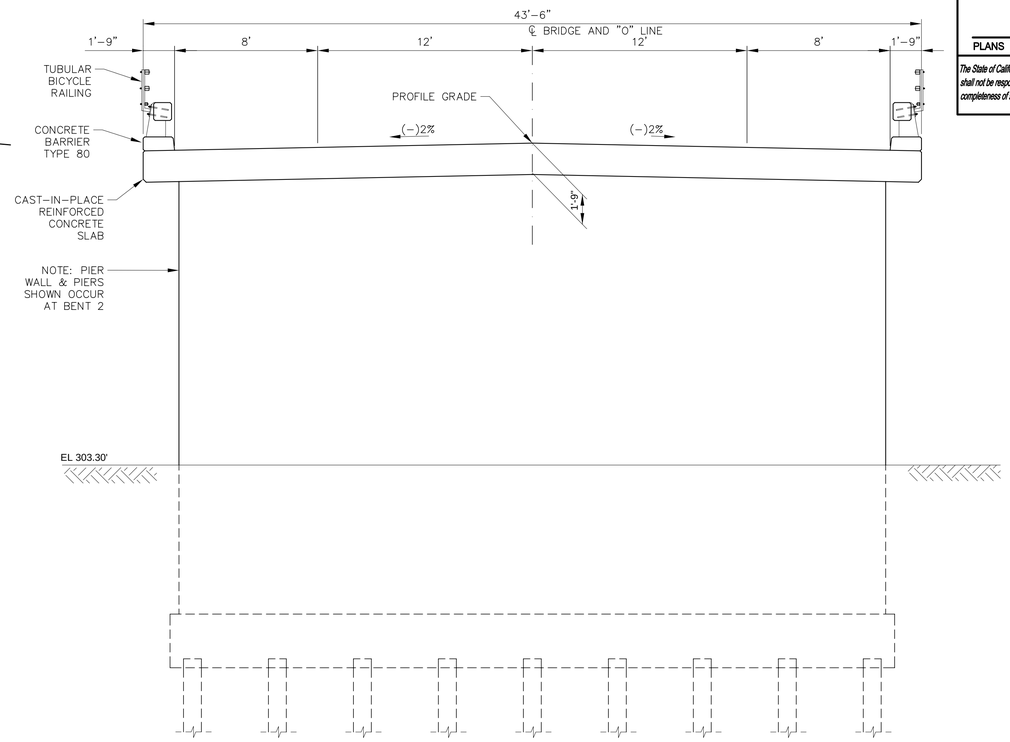

TYPICAL SECTION

SCALE: 1/4"=1'-0"

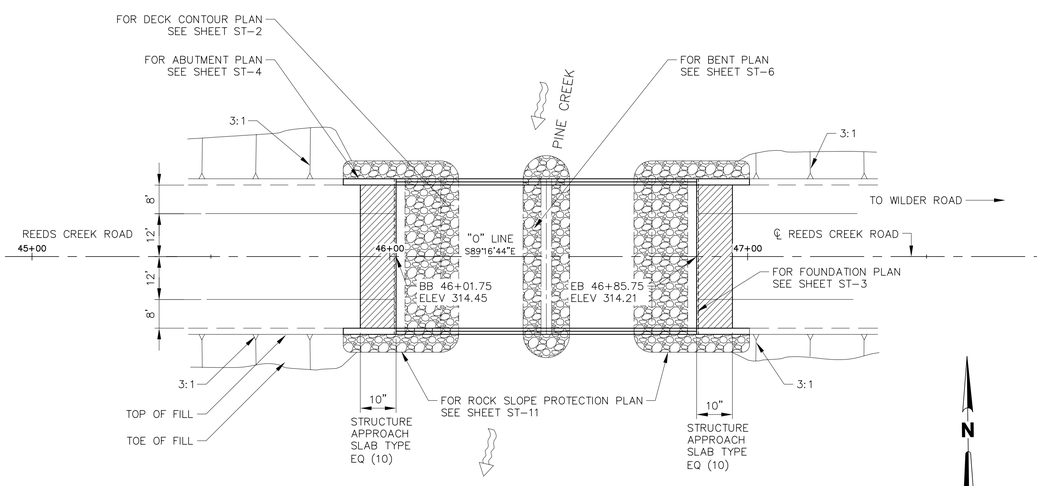

GENERAL PLAN

SCALE: 1"=20'

STANDARD PLANS DATED 2010

DRAWING	DESCRIPTION
A10A	ABBREVIATIONS (SHEET 1 OF 2)
A10B	ABBREVIATIONS (SHEET 2 OF 2)
A10C	LINES AND SYMBOLS (SHEET 1 OF 3)
A10D	LINES AND SYMBOLS (SHEET 2 OF 3)
A10E	LINES AND SYMBOLS (SHEET 3 OF 3)
A10F	LEGEND - SOIL (SHEET 1 OF 2)
A10G	LEGEND - SOIL (SHEET 2 OF 2)
A62C	LIMITS OF PAVEMENT FOR EXCAVATION & BACKFILL - BRIDGE
B0-1	BRIDGE DETAILS
B11-60	CONCRETE BARRIER TYPE 80

STANDARD PLAN SHEET NO.

DETAIL NO.

INDEX OF SHEETS

SHEET	DRAWING	DESCRIPTION
8	ST-1	GENERAL PLAN
9	ST-2	DECK CONTOURS
10	ST-3	FOUNDATION PLAN
11	ST-4	ABUTMENT PLAN
12	ST-5	WING WALL DETAILS
13	ST-6	BENT DETAILS - 1
14	ST-7	BENT DETAILS - 2
15	ST-8	DECK DETAILS
16	ST-9	SLAB REINFORCEMENT DETAILS
17	ST-10	BRIDGE RAILING DETAILS
18	ST-11	ROCK SLOPE PROTECTION PLAN
19	ST-12	STRUCTURE APPROACH SLAB
20	ST-13	LOG OF TEST BORINGS
21	ST-14	LOG OF TEST BORINGS

GENERAL NOTES
LOAD AND RESISTANCE FACTOR DESIGN

DESIGN: BRIDGE DESIGN SPECIFICATIONS
AASHTO LRFD BRIDGE DESIGN SPECIFICATIONS, 6TH EDITION WITH INTERIMS AND REVISIONS BY CALTRANS DATED 2014

SEISMIC DESIGN: CALTRANS SEISMIC DESIGN CRITERIA (SDC), VERSION 1.7 APRIL 2013

DEAD LOADING: INCLUDES 35psf FOR FUTURE WEARING SURFACE

LIVE LOADING: HL−93 AND P−15 DESIGN LOAD

SEISMIC LOADING: SOIL PROFILE: Vs30 = 286 m/s
MOMENT MAGNITUDE: Mmax = 6.6 (BATTLE CREEK 2011 CFM)
PEAK GROUND ACCELERATION = 0.27g
SEE 'ARS DESIGN CURVE'

REINFORCED CONCRETE: fy = 60,000 psi
f'c = 4,000 psi @ 28 DAYS
n = 9

GENERAL SHEET NOTES

1. FOR CONCRETE TYPE LIMITS, HYDROLOGIC SUMMARY AND ARS DESIGN CURVE SEE SHEET S-2

Not for Bidding Purposes

DESIGN OVERSIGHT	DESIGN	BY S. BURNS	CHECKED C. SERRAHN	LOAD & RESISTANCE FACTOR DESIGN	LIVE LOADING: S. BURNS PERMIT DESIGN VEHICLE
SIGN OFF DATE	DETAILS	BY C. PHELPS	CHECKED S. BURNS	LAYOUT BY C. PHELPS	CHECKED S. BURNS
	QUANTITIES	BY M. WARGULA	CHECKED S. BURNS	SPECIFICATIONS BY S. BURNS	PLANS AND SPECS COMPARED W. SILVA

DESIGN GENERAL PLAN SHEET (ENGLISH) (REV. 03/14/12)

ORIGINAL SCALE IN INCHES FOR REDUCED PLANS 0 1 2 3

PREPARED FOR THE STATE OF CALIFORNIA DEPARTMENT OF TRANSPORTATION

STEPHEN C. BURNS — PROJECT ENGINEER

BRIDGE NO. 08C0379 — POST MILES –

REEDS CREEK ROAD AT PINE CREEK BRIDGE

GENERAL PLAN — ST-1

UNIT:
PROJECT NUMBER & PHASE: 305411
CONTRACT NO.:

DISREGARD PRINTS BEARING EARLIER REVISION DATES

REVISION DATES

SHEET 8 OF 21

FILE => S-1.dwg

USERNAME => cphelps — DATE PLOTTED => 4/30/2015 — TIME PLOTTED => 4:36 PM

DIST	COUNTY	ROUTE	POST MILES TOTAL PROJECT	SHEET No	TOTAL SHEETS
2	TEH	CR		9	21

REGISTERED STRUCTURAL ENGINEER — DATE 4/23/2015

PLANS APPROVAL DATE

REGISTERED PROFESSIONAL ENGINEER STEPHEN C. BURNS No. S4229 Exp. 6/30/16 STRUCTURAL STATE OF CALIFORNIA

The State of California or its officers or agents shall not be responsible for the accuracy or completeness of scanned copies of this plan sheet.

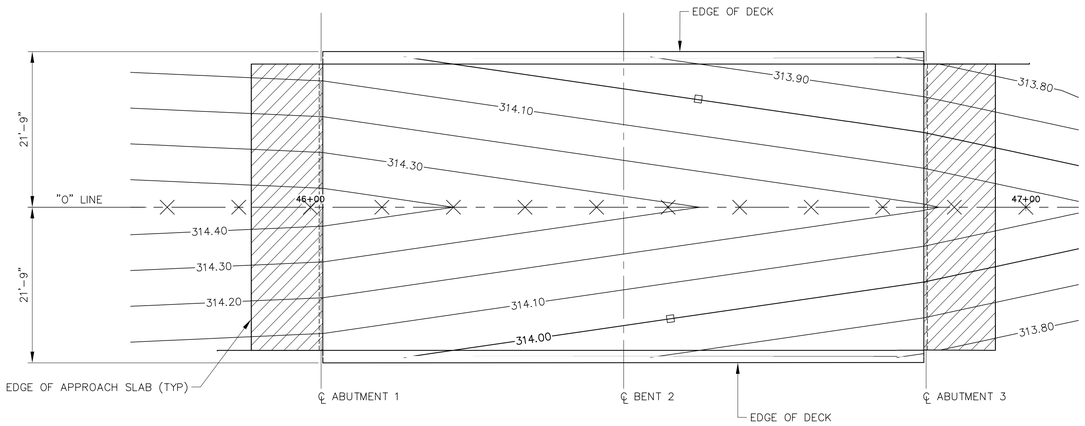

NOTES

□ – INDICATES 0.10 FOOT CONTOURS

× – 10' INTERVALS ALONG STATION LINE

DECK CONTOUR PLAN

SCALE: 1"=10'

N

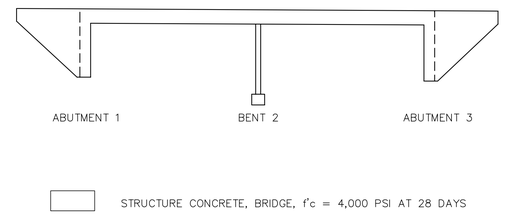

CONCRETE TYPE LIMITS

NO SCALE

Not for Bidding Purposes

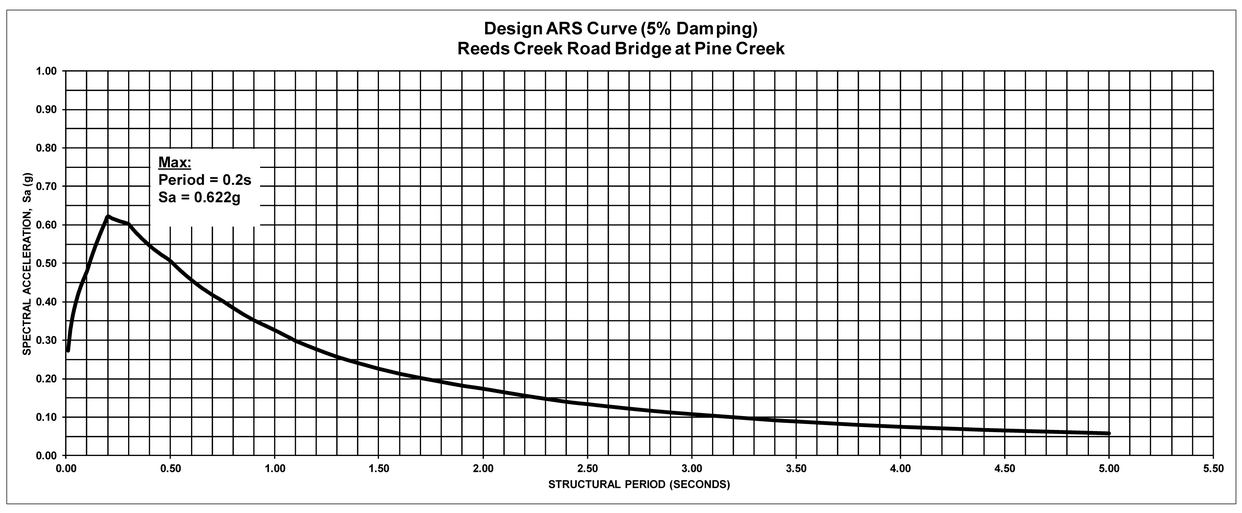

HYDROLOGIC SUMMARY

DRAINAGE AREA: 6.0 SQUARE MILES

	DESIGN FLOOD	BASE FLOOD	OVERTOPPING FLOOD (3)
FREQUENCY (YEARS)	50	100	>100
DISCHARGE (CFS) (FT)	3,030	3,460	>4,000+-
WATER SURFACE ELEVATION (1)	310.02	310.19	310.76
VELOCITY (FPS) (2)	6.7	7.4	>10+-

NOTES:

(1) EXCEPT FOR OVERTOPPING FLOOD AT CROSS-SECTION 470 LOCATED APPOXIMATELY 10-FEET UPDSTREAM OF THE EXISTING BRIDGE. FOR OVERTOPPING FLOOD, AT CROSS-SECTION 550 NEAR LOCATION OF INCIPIENT OVERTOPPING.

(2) HIGHEST AVERAGE CHANNEL VELOCITY NEAR BRIDGE.

(3) INCIPIENT OVERTOPPING OCCURS AS A RESULT OF STREAM WATER ENTERING THE DRAINAGE DITCH ALONG REEDS CREEK ROAD UPSTREAM OF THE BRIDGE, LEFT BANK.

DESIGN OVERSIGHT	DESIGN	BY S. BURNS	CHECKED C. SERRAHN	LOAD & RESISTANCE FACTOR DESIGN	LIVE LOADING: PERMIT DESIGN VEHICLE S. BURNS
	DETAILS	BY C. PHELPS	CHECKED S. BURNS	LAYOUT BY C. PHELPS	CHECKED S. BURNS
SIGN OFF DATE	QUANTITIES	BY M. WARGULA	CHECKED S. BURNS	SPECIFICATIONS BY S. BURNS	PLANS AND SPECS COMPARED W. SILVA

PREPARED FOR THE STATE OF CALIFORNIA DEPARTMENT OF TRANSPORTATION

STEPHEN C. BURNS — PROJECT ENGINEER

BRIDGE NO. 08C0379 — POST MILES –

REEDS CREEK ROAD AT PINE CREEK BRIDGE

DECK CONTOURS — ST-2

DESIGN GENERAL PLAN SHEET (ENGLISH) (REV. 03/14/12)

ORIGINAL SCALE IN INCHES FOR REDUCED PLANS 0 1 2 3

UNIT:

PROJECT NUMBER & PHASE: 305411 — CONTRACT NO.:

DISREGARD PRINTS BEARING EARLIER REVISION DATES

REVISION DATES — SHEET 9 OF 21

FILE => S-2.dwg

USERNAME => cphelps — DATE PLOTTED => 4/30/2015 — TIME PLOTTED => 4:37 PM

DIST	COUNTY	ROUTE	POST MILES TOTAL PROJECT	SHEET No	TOTAL SHEETS
2	TEH	CR		10	21

REGISTERED STRUCTURAL ENGINEER 4/23/2015 DATE

PLANS APPROVAL DATE

REGISTERED PROFESSIONAL ENGINEER STEPHEN C. BURNS No. S4229 Exp. 6/30/16 STRUCTURAL STATE OF CALIFORNIA

The State of California or its officers or agents shall not be responsible for the accuracy or completeness of scanned copies of this plan sheet.

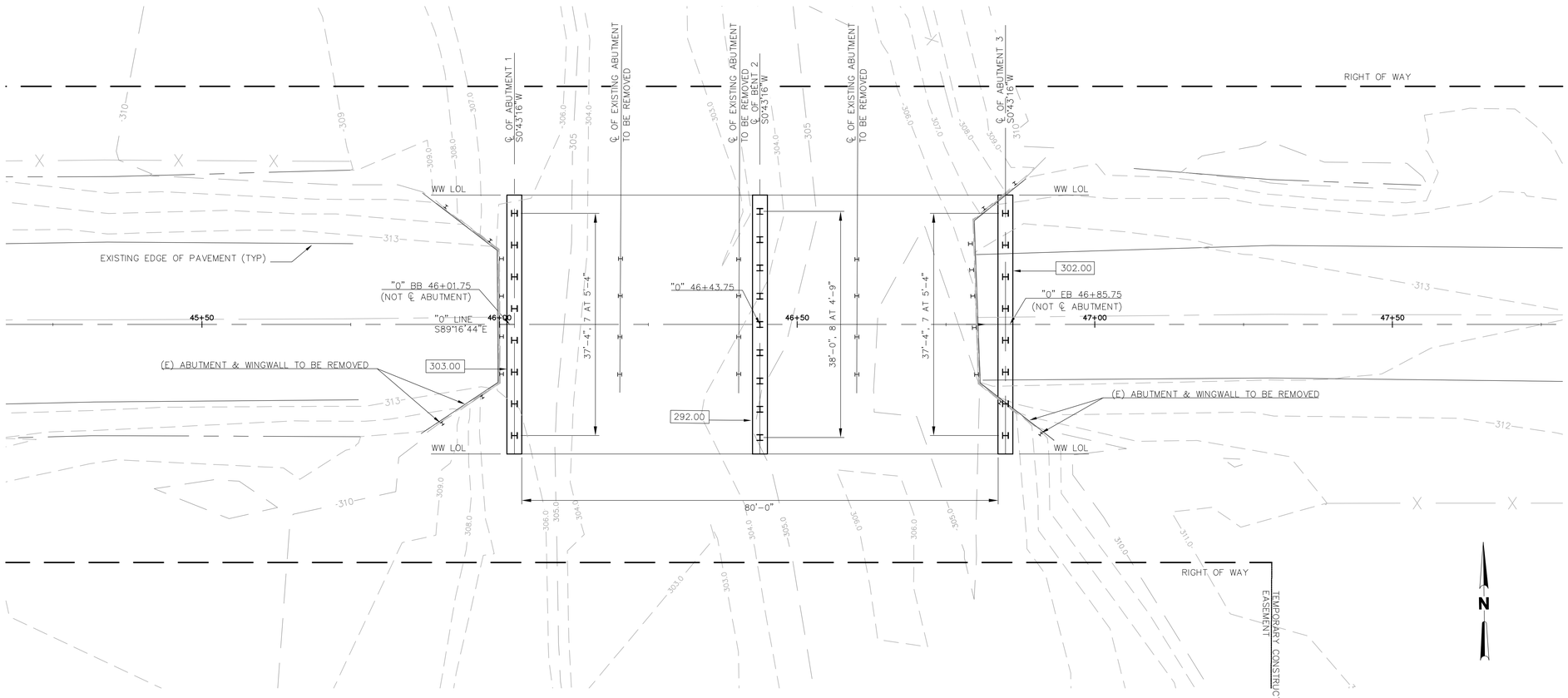

FOUNDATION PLAN

1"=10' 0 10' 20'

PILE DATA TABLE					
SUPPORT	PILE TYPE	NOMINAL RESISTANCE (KIPS)		DESIGN TIP ELEVATION (FEET)	SPECIFIED TIP ELEVATION (FEET)
		COMPRESSION	TENSION		
ABUTMENT 1	HP12x63	200	0	272.0 (A) / 280.0 (B)	272.0
BENT 2	HP12x63	260	0	250.0 (A)(C) / 268.0 (B)	250.0
ABUTMENT 3	HP12x63	200	0	272.0 (A) / 279.0 (B)	272.0

NOTES:

1. DESIGN TIP ELEVATIONS FOR ABUTMENTS ARE CONTROLLED BY (A) COMPRESSION, (B) LATERAL LOAD.
2. DESIGN TIP ELEVATIONS FOR BENT 2 ARE CONTROLLED BY (A) COMPRESSION (STRENGTH LIMIT), (B) LATERAL LOAD, (C) SCOUR TO ELEVATION 301.0, (D) TENSION
3. THE SPECIFIED TIP ELEVATION SHALL NOT BE RAISED.

NOTES:

1. ALL PILES SHOWN
2. INDICATES BOTTOM OF FOOTING ELEVATION

BENCHMARKS:

REFER TO SURVEY CONTROL PLAN

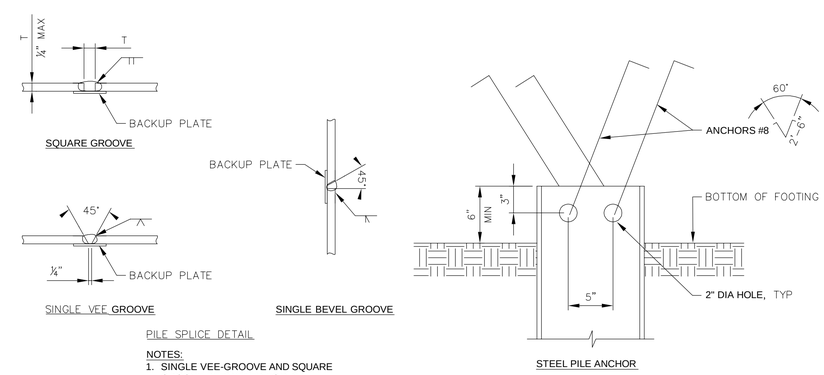

PILE SPLICE DETAIL

NOTES:
1. SINGLE VEE-GROOVE AND SQUARE GROOVE PERMITTED FOR ALL POSITIONS.
2. SINGLE BEVEL-GROOVE PERMITTED FOR HORIZONTAL JOINTS ONLY.

STEEL H PILE DETAILS

SCALE: 1 1/2" = 1'-0"

Not for Bidding Purposes

GEOTECHNICAL PROFESSIONAL 4/23/2015 APPROVAL DATE

DESIGN OVERSIGHT	SCALE: AS NOTED	VERT.DATUM NAVD 88	HORZ.DATUM CA STATE PLANE ZONE 1 NAD 83	DESIGN	BY S. BURNS	CHECKED C. SERRAHN	PREPARED FOR THE STATE OF CALIFORNIA DEPARTMENT OF TRANSPORTATION
	PHOTOGRAMMETRY AS OF:		ALIGNMENT TIES	DETAILS	BY C. PHELPS	CHECKED S. BURNS	
SIGN OFF DATE	SURVEYED BY		DRAFTED BY	QUANTITIES	BY M. WARGULA	CHECKED S. BURNS	
	FIELD CHECKED BY		CHECKED BY				

STEPHEN C. BURNS
PROJECT ENGINEER

BRIDGE NO. 08C0379
POST MILES -

REEDS CREEK ROAD AT PINE CREEK BRIDGE

FOUNDATION PLAN ST-3

FOUNDATION PLAN SHEET (ENGLISH) (REV. 03/14/12)

ORIGINAL SCALE IN INCHES FOR REDUCED PLANS 0 1 2 3

UNIT:
PROJECT NUMBER & PHASE: 305411 CONTRACT NO.:

DISREGARD PRINTS BEARING EARLIER REVISION DATES

REVISION DATES

SHEET 10 OF 21

FILE => S-3.dwg

USERNAME => crphelps DATE PLOTTED => 4/30/2015 TIME PLOTTED => 4:43 PM

DIST	COUNTY	ROUTE	POST MILES TOTAL PROJECT	SHEET No	TOTAL SHEETS
2	TEH	CR		11	21

REGISTERED STRUCTURAL ENGINEER — DATE 4/23/2015

PLANS APPROVAL DATE

REGISTERED PROFESSIONAL ENGINEER STEPHEN C. BURNS No. S4229 Exp. 6/30/16 STRUCTURAL STATE OF CALIFORNIA

The State of California or its officers or agents shall not be responsible for the accuracy or completeness of scanned copies of this plan sheet.

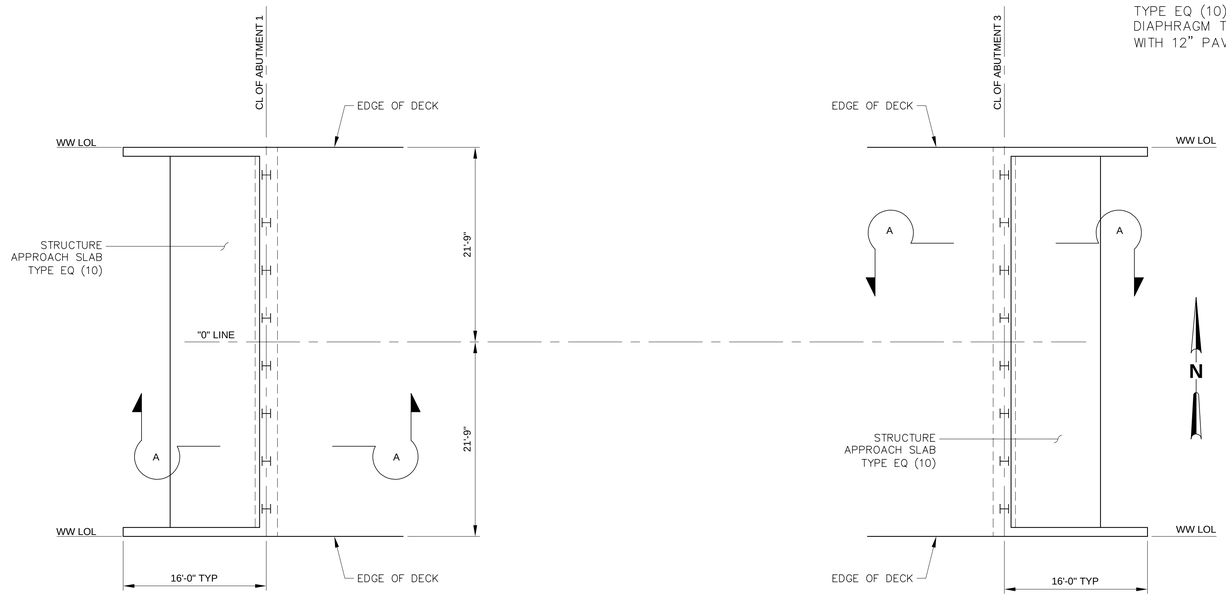

ABUTMENT PLAN

1/8"=1'-0" 0 4' 8' 16'

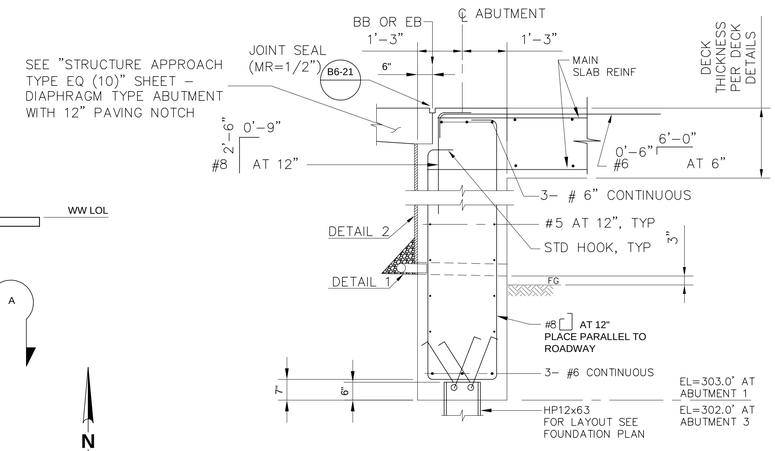

SECTION A-A

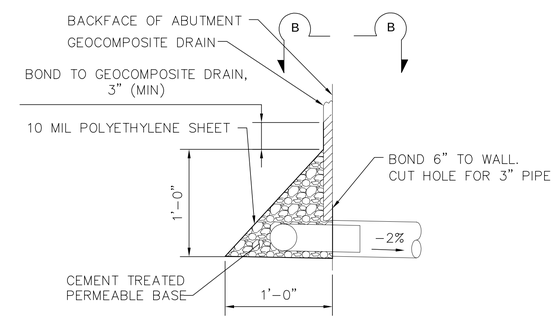

DETAIL 1

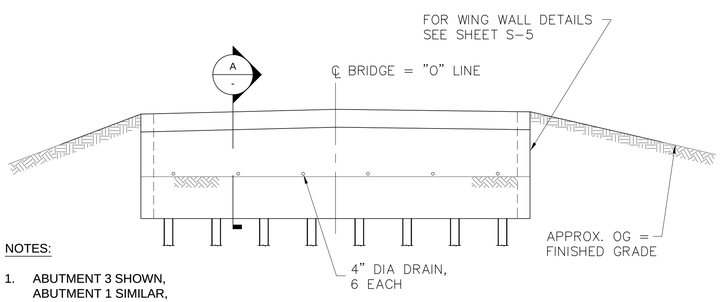

NOTES:

1. ABUTMENT 3 SHOWN, ABUTMENT 1 SIMILAR, RAILING NOT SHOWN

ABUTMENT ELEVATION

1/8"=1'-0" 0 4' 8' 16'

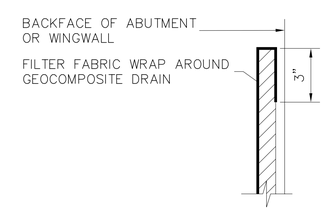

DETAIL 2

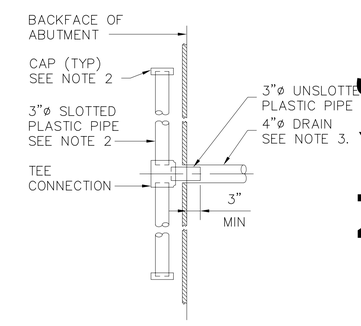

VIEW B-B

NOTES:

1. EXPOSED WALL DRAINS SHALL BE LOCATED 3"± ABOVE FINISHED GRADE
2. GEOCOMPOSITE DRAIN, CEMENT TREATED PERMEABLE BASE AND 3"ø SLOTTED PLASTIC PIPE TO BE PLACED BEHIND ABUTMENT AND BETWEEN WING WALLS
3. 4" ø DRAINS AT 7'–3" C–C

Not for Bidding Purposes

DESIGN OVERSIGHT	DESIGN	BY S. BURNS	CHECKED C. SERRAHN	LOAD & RESISTANCE FACTOR DESIGN	LIVE LOADING: PERMIT DESIGN VEHICLE
	DETAILS	BY C. PHELPS	CHECKED S. BURNS	LAYOUT BY C. PHELPS	CHECKED S. BURNS
SIGN OFF DATE	QUANTITIES	BY M. WARGULA	CHECKED S. BURNS	SPECIFICATIONS BY S. BURNS	PLANS AND SPECS COMPARED W. SILVA

PREPARED FOR THE STATE OF CALIFORNIA DEPARTMENT OF TRANSPORTATION

STEPHEN C. BURNS — PROJECT ENGINEER

BRIDGE NO. 08C0379 — POST MILES –

REEDS CREEK ROAD AT PINE CREEK BRIDGE

ABUTMENT PLAN — ST-4

DESIGN GENERAL PLAN SHEET (ENGLISH) (REV. 03/14/12)

ORIGINAL SCALE IN INCHES FOR REDUCED PLANS 0 1 2 3

UNIT:

PROJECT NUMBER & PHASE: 305411 — CONTRACT NO.:

DISREGARD PRINTS BEARING EARLIER REVISION DATES

REVISION DATES — SHEET 11 OF 21

FILE => S-4.dwg

USERNAME => cphelps — DATE PLOTTED => 4/30/2015 — TIME PLOTTED => 4:37 PM

DIST	COUNTY	ROUTE	POST MILES TOTAL PROJECT	SHEET No	TOTAL SHEETS
2	TEH	CR		12	21

REGISTERED STRUCTURAL ENGINEER — DATE 4/23/2015

PLANS APPROVAL DATE

REGISTERED PROFESSIONAL ENGINEER STEPHEN C. BURNS No. S4229 Exp. 6/30/16 STRUCTURAL STATE OF CALIFORNIA

The State of California or its officers or agents shall not be responsible for the accuracy or completeness of scanned copies of this plan sheet.

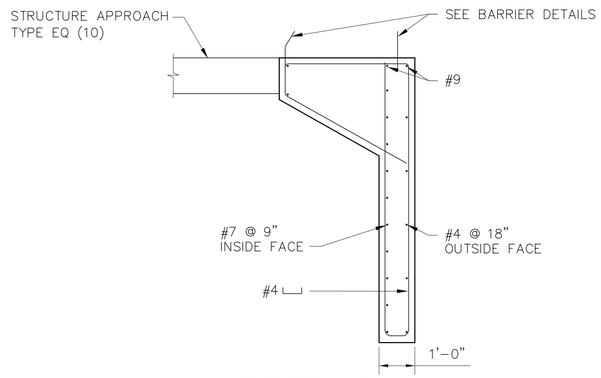

SECTION J-J

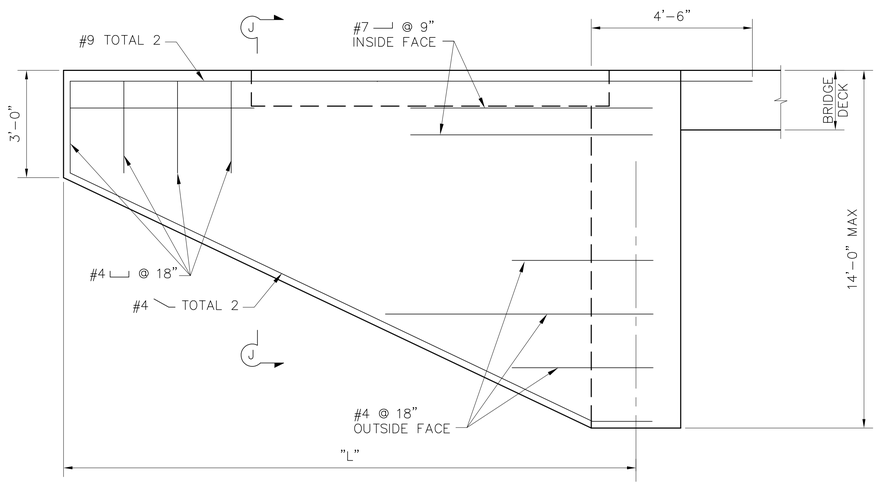

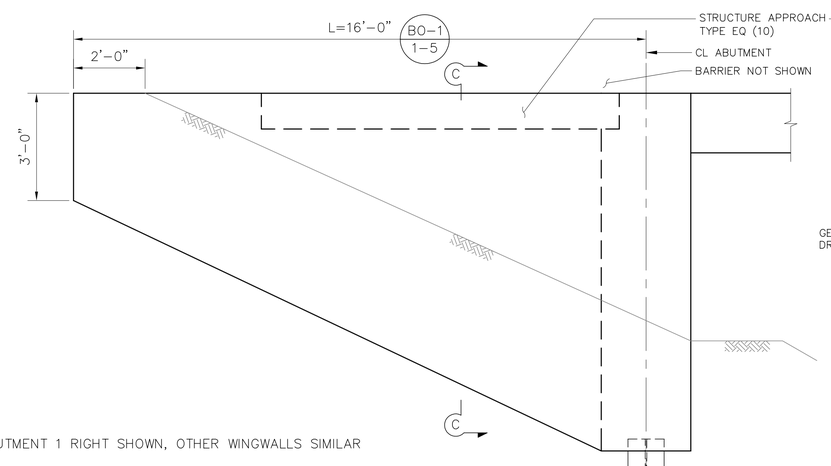

NOTE: ABUTMENT 1 RIGHT SHOWN, OTHER WINGWALLS SIMILAR

WINGWALL ELEVATION

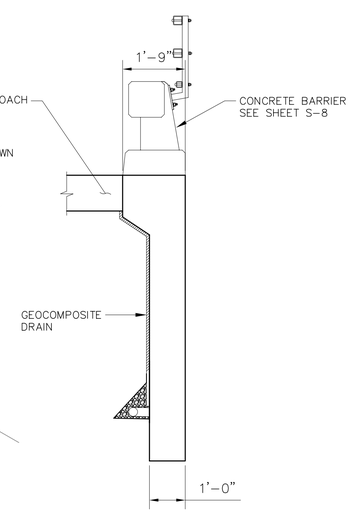

SECTION C-C

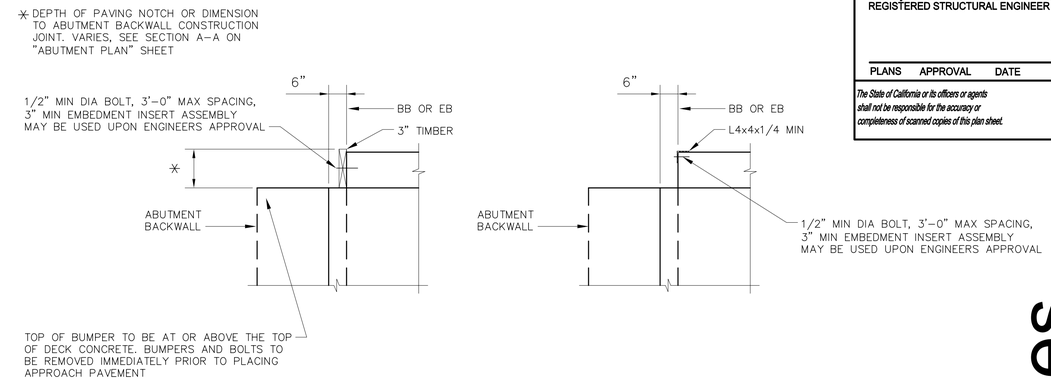

ALTERNATIVE 1 **ALTERNATIVE 2**

TEMPORARY BUMPERS

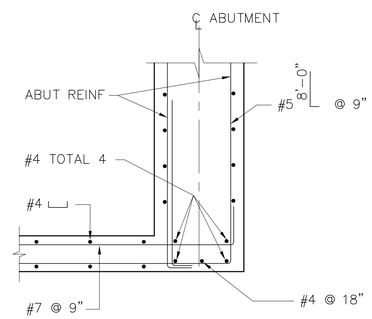

CORNER DETAIL

WINGWALLS FOR DIAPHRAGM ABUTMENT

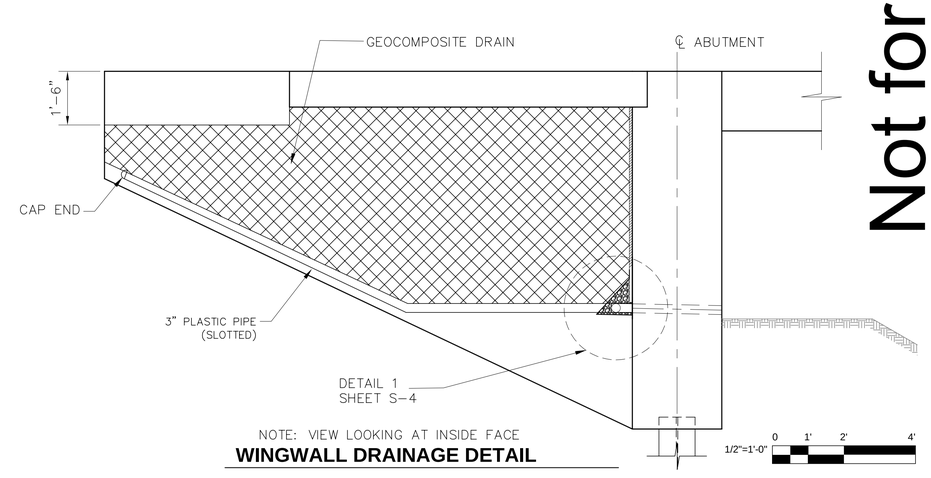

NOTE: VIEW LOOKING AT INSIDE FACE

WINGWALL DRAINAGE DETAIL

Not for Bidding Purposes

DESIGN OVERSIGHT	DESIGN	BY S. BURNS	CHECKED C. SERRAHN	PREPARED FOR THE STATE OF CALIFORNIA DEPARTMENT OF TRANSPORTATION	STEPHEN C. BURNS PROJECT ENGINEER
SIGN OFF DATE	DETAILS	BY C. PHELPS	CHECKED S. BURNS		BRIDGE NO. 08C0379 / POST MILES –
	QUANTITIES	BY M. WARGULA	CHECKED S. BURNS		

REEDS CREEK ROAD AT PINE CREEK BRIDGE

WING WALL DETAILS — ST-5

DESIGN DETAIL SHEET (ENGLISH) (REV. 03/14/12)

ORIGINAL SCALE IN INCHES FOR REDUCED PLANS 0 1 2 3

UNIT: PROJECT NUMBER & PHASE: 305411 CONTRACT NO.:

DISREGARD PRINTS BEARING EARLIER REVISION DATES

REVISION DATES | SHEET 12 | OF 21

FILE => S-5.dwg

USERNAME => cphelps DATE PLOTTED => 4/30/2015 TIME PLOTTED => 4:37 PM

DIST	COUNTY	ROUTE	POST MILES TOTAL PROJECT	SHEET No	TOTAL SHEETS
2	TEH	CR		13	21

REGISTERED STRUCTURAL ENGINEER — DATE 4/23/2015

PLANS APPROVAL DATE

The State of California or its officers or agents shall not be responsible for the accuracy or completeness of scanned copies of this plan sheet.

REGISTERED PROFESSIONAL ENGINEER STEPHEN C. BURNS No. S4229 Exp. 6/30/16 STRUCTURAL STATE OF CALIFORNIA

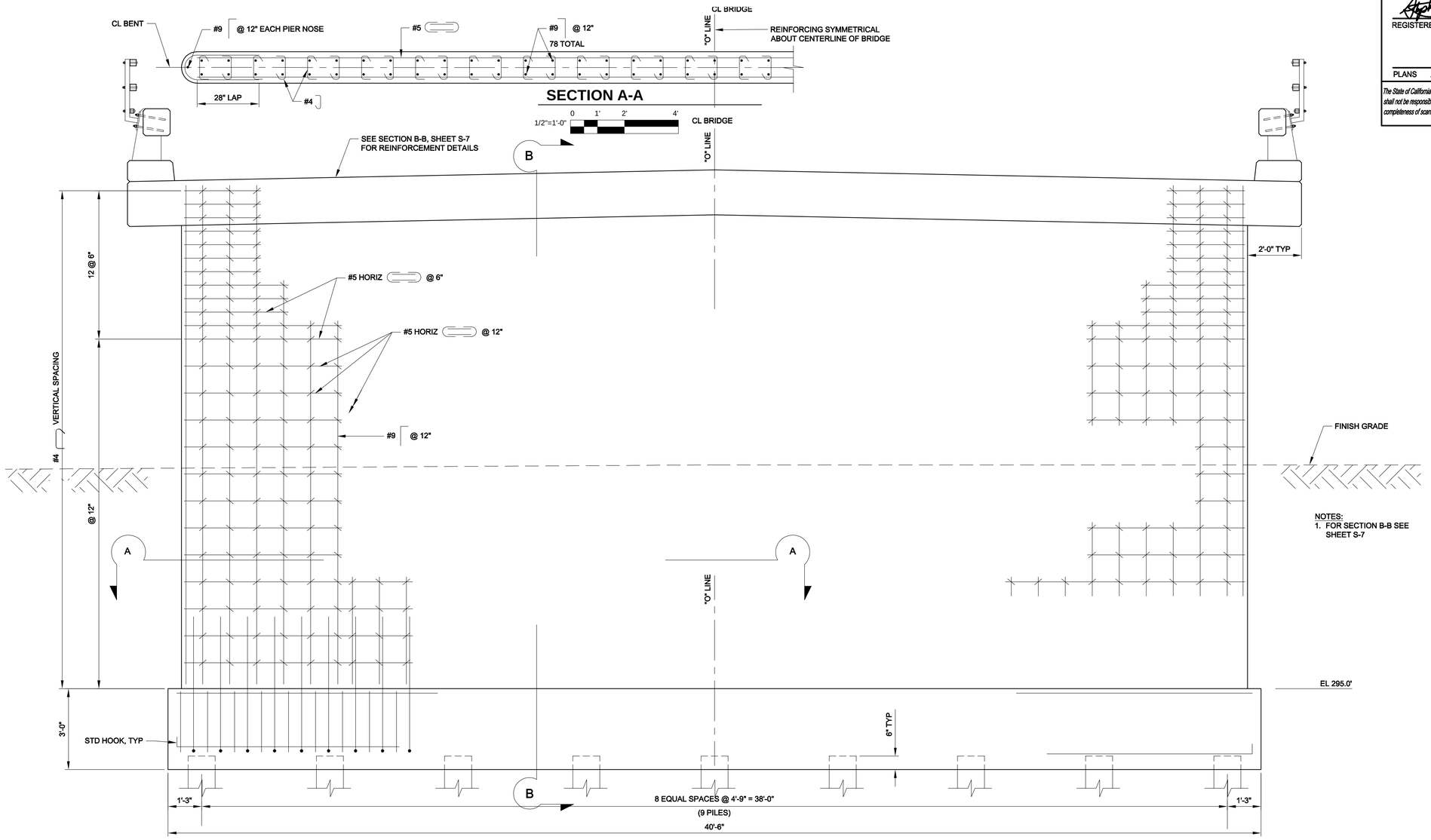

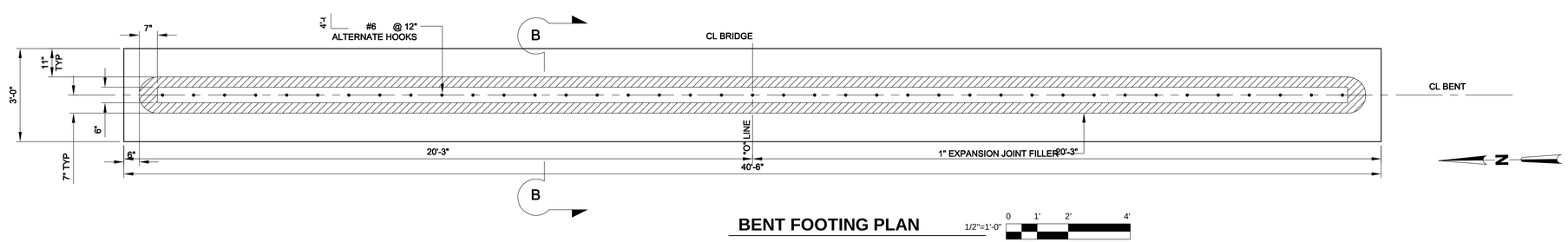

Not for Bidding Purposes

DESIGN OVERSIGHT	DESIGN	BY S. BURNS	CHECKED C. SERRAHN	LOAD & RESISTANCE FACTOR DESIGN	LIVE LOADING: PERMIT DESIGN VEHICLE	
	DETAILS	BY C. PHELPS	CHECKED S. BURNS	LAYOUT	BY C. PHELPS	CHECKED S. BURNS
SIGN OFF DATE	QUANTITIES	BY M. WARGULA	CHECKED S. BURNS	SPECIFICATIONS	BY S. BURNS	PLANS AND SPECS COMPARED W. SILVA

PREPARED FOR THE STATE OF CALIFORNIA DEPARTMENT OF TRANSPORTATION

STEPHEN C. BURNS
PROJECT ENGINEER

BRIDGE NO. 08C0379
POST MILES –

REEDS CREEK ROAD AT PINE CREEK BRIDGE

BENT DETAILS -1 — ST-6

DESIGN GENERAL PLAN SHEET (ENGLISH) (REV. 03/14/12)

ORIGINAL SCALE IN INCHES FOR REDUCED PLANS 0 1 2 3

UNIT:
PROJECT NUMBER & PHASE: 305411
CONTRACT NO.:

DISREGARD PRINTS BEARING EARLIER REVISION DATES

REVISION DATES				SHEET	OF
				13	21

FILE => S-6.dwg

USERNAME => cphelps DATE PLOTTED => 4/30/2015 TIME PLOTTED => 4:45 PM

DIST	COUNTY	ROUTE	POST MILES TOTAL PROJECT	SHEET No	TOTAL SHEETS
2	TEH	CR		14	21

REGISTERED STRUCTURAL ENGINEER — DATE 4/23/2015

PLANS APPROVAL DATE

REGISTERED PROFESSIONAL ENGINEER STEPHEN C. BURNS No. S4229 Exp. 6/30/16 STRUCTURAL STATE OF CALIFORNIA

The State of California or its officers or agents shall not be responsible for the accuracy or completeness of scanned copies of this plan sheet.

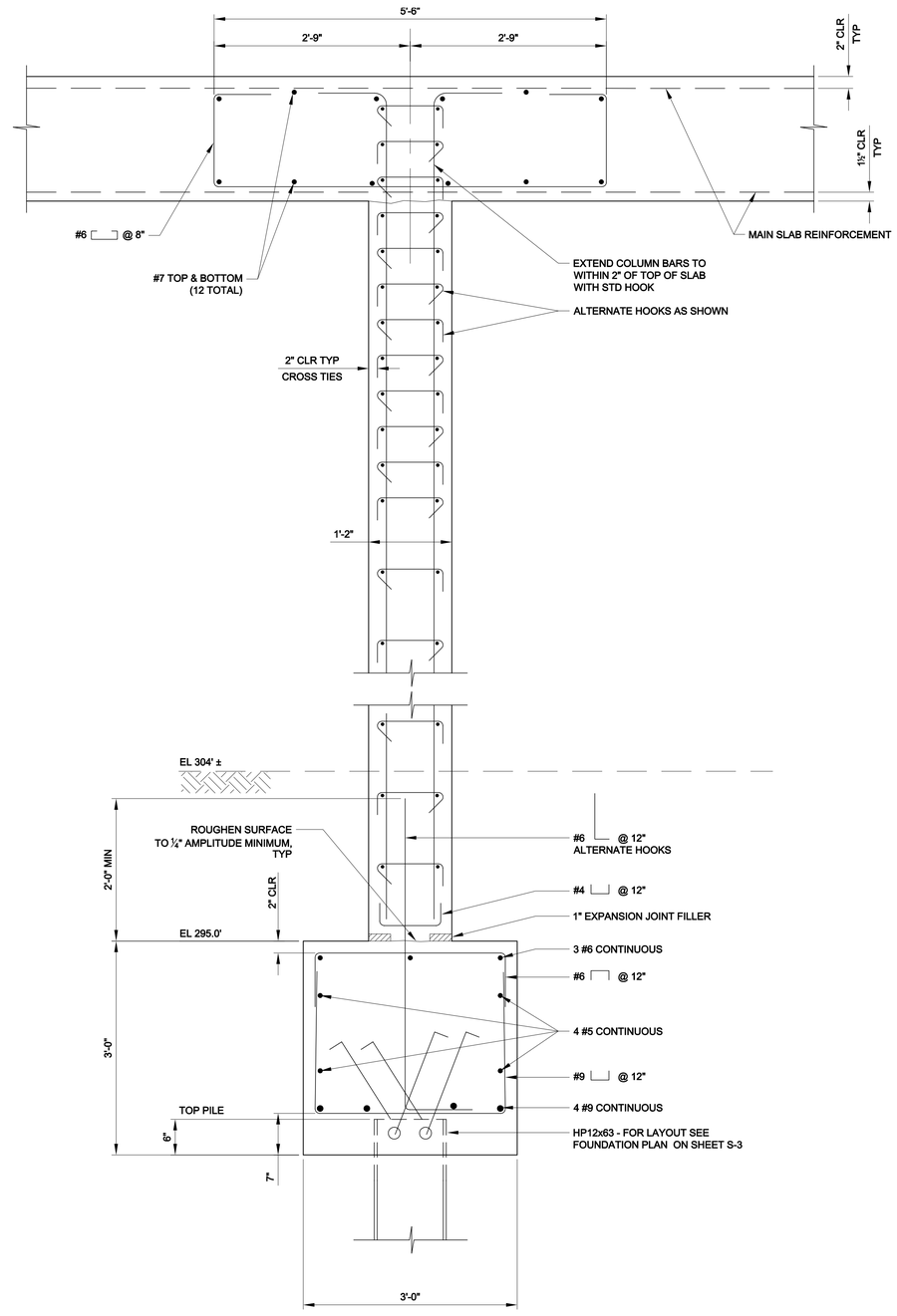

SECTION B-B

1"=1'-0" 0 1/2' 1' 2'

Not for Bidding Purposes

DESIGN OVERSIGHT	DESIGN	BY S. BURNS	CHECKED C. SERRAHN	LOAD & RESISTANCE FACTOR DESIGN	LIVE LOADING: PERMIT DESIGN VEHICLE	
	DETAILS	BY C. PHELPS	CHECKED S. BURNS	LAYOUT	BY C. PHELPS	CHECKED S. BURNS
SIGN OFF DATE	QUANTITIES	BY M. WARGULA	CHECKED S. BURNS	SPECIFICATIONS	BY S. BURNS	PLANS AND SPECS COMPARED W. SILVA

PREPARED FOR THE STATE OF CALIFORNIA DEPARTMENT OF TRANSPORTATION

STEPHEN C. BURNS — PROJECT ENGINEER

BRIDGE NO. 08C0379 — POST MILES –

REEDS CREEK ROAD AT PINE CREEK BRIDGE

BENT DETAILS - 2 — ST-7

DESIGN GENERAL PLAN SHEET (ENGLISH) (REV. 03/14/12)

ORIGINAL SCALE IN INCHES FOR REDUCED PLANS 0 1 2 3

UNIT:
PROJECT NUMBER & PHASE: 305411 CONTRACT NO.:

DISREGARD PRINTS BEARING EARLIER REVISION DATES

REVISION DATES | SHEET 14 | OF 21

FILE => S-7.dwg

USERNAME => crphelps DATE PLOTTED => 4/30/2015 TIME PLOTTED => 4:37 PM

DIST	COUNTY	ROUTE	POST MILES TOTAL PROJECT	SHEET No	TOTAL SHEETS
2	TEH	CR		15	21

REGISTERED STRUCTURAL ENGINEER — DATE 4/23/2015

PLANS APPROVAL DATE

REGISTERED PROFESSIONAL ENGINEER STEPHEN C. BURNS No. S4229 Exp. 6/30/16 STRUCTURAL STATE OF CALIFORNIA

The State of California or its officers or agents shall not be responsible for the accuracy or completeness of scanned copies of this plan sheet.

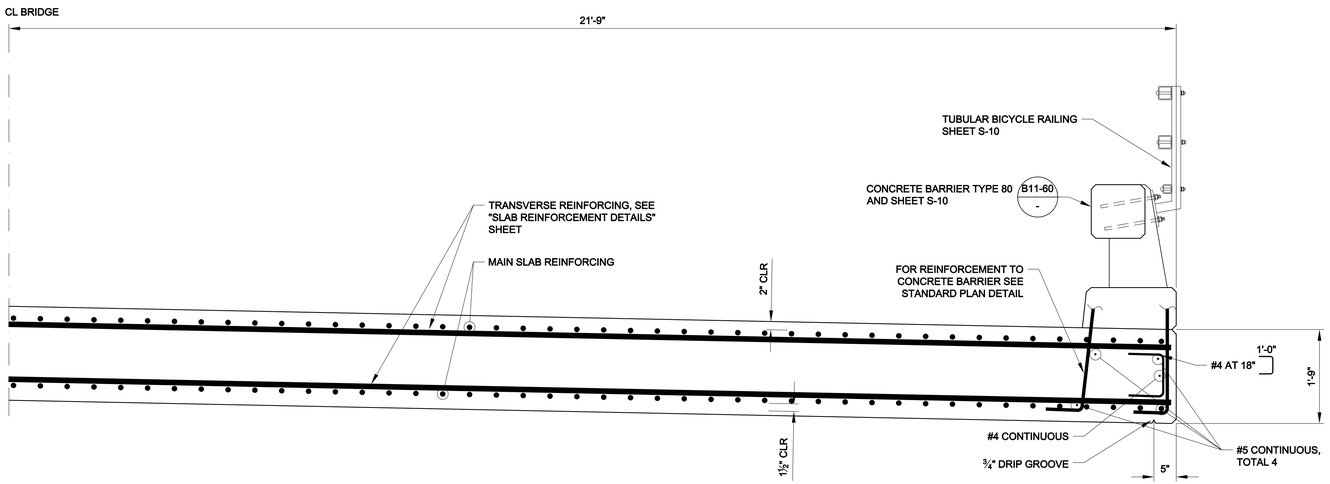

PARTIAL TYPICAL SECTION

1/2"=1'-0" 0 1' 2' 4'

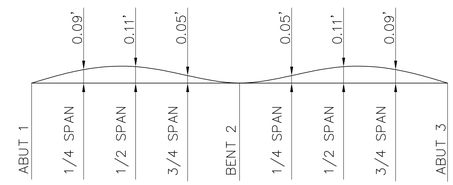

CAMBER DIAGRAM

NOT TO SCALE

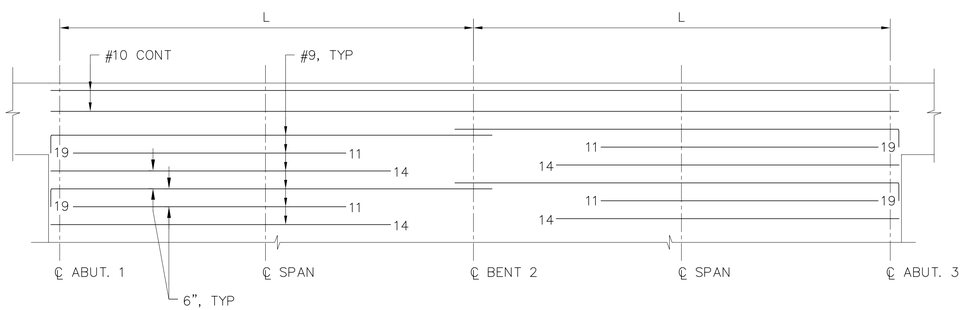

REINFORCEMENT- BOTTOM OF SLAB

NOT TO SCALE

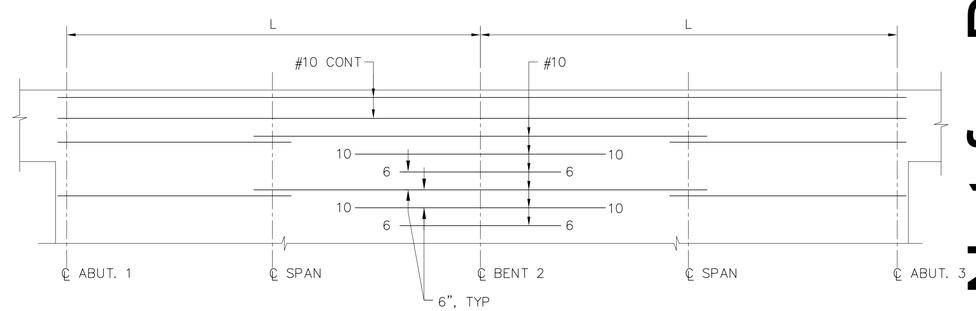

REINFORCEMENT- TOP OF SLAB

NOT TO SCALE

NOTES:

1. NUMBERS AT ENDS OF BARS INDICATE DISTANCE IN FEET FROM CENTERLINE BENT FOR TOP REINFORCEMENT AND CENTERLINE SPAN FOR BOTTOM REINFORCEMENT
2. SEE "SLAB REINFORCEMENT DETAILS" SHEET FOR ADDITIONAL INFORMATION

Not for Bidding Purposes

DESIGN	BY S. BURNS	CHECKED C. SERRAHN	
DETAILS	BY C. PHELPS	CHECKED S. BURNS	
QUANTITIES	BY M. WARGULA	CHECKED S. BURNS	

DESIGN OVERSIGHT

SIGN OFF DATE

DESIGN DETAIL SHEET (ENGLISH) (REV. 03/14/12)

ORIGINAL SCALE IN INCHES FOR REDUCED PLANS 0 1 2 3

PREPARED FOR THE STATE OF CALIFORNIA DEPARTMENT OF TRANSPORTATION

STEPHEN C. BURNS
PROJECT ENGINEER

BRIDGE NO. 08C0379
POST MILES –

REEDS CREEK ROAD AT PINE CREEK BRIDGE

DECK DETAILS ST-8

UNIT:
PROJECT NUMBER & PHASE: 305411 CONTRACT NO.:

DISREGARD PRINTS BEARING EARLIER REVISION DATES

REVISION DATES

SHEET 15 OF 21

FILE => S-8.dwg

USERNAME => crphelps DATE PLOTTED => 4/30/2015 TIME PLOTTED => 4:38 PM

DIST	COUNTY	ROUTE	POST MILES TOTAL PROJECT	SHEET No	TOTAL SHEETS
2	TEH	CR		16	21

REGISTERED STRUCTURAL ENGINEER — DATE 4/23/2015

PLANS APPROVAL DATE

REGISTERED PROFESSIONAL ENGINEER STEPHEN C. BURNS No. S4229 Exp. 6/30/16 STRUCTURAL STATE OF CALIFORNIA

The State of California or its officers or agents shall not be responsible for the accuracy or completeness of scanned copies of this plan sheet.

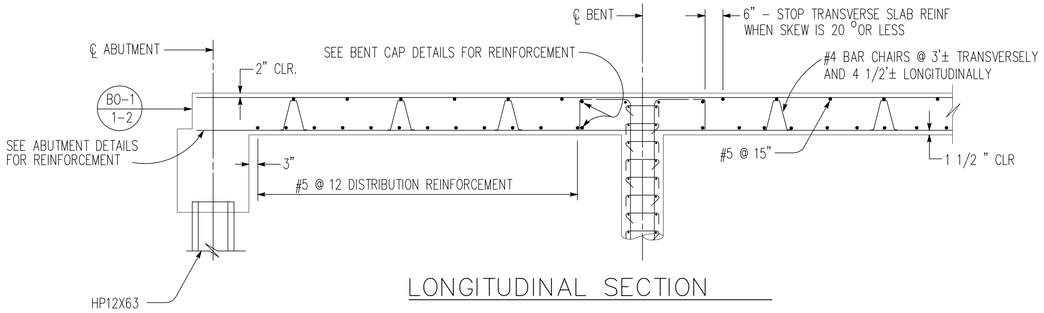

LONGITUDINAL SECTION

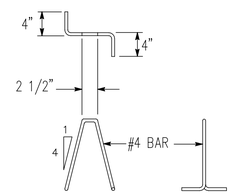

BAR CHAIR DETAIL

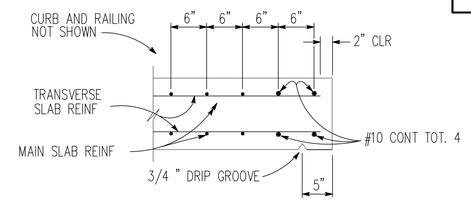

EDGE OF SLAB DETAILS

BAR SPLICE LENGTH								
BAR SIZE	#4	#5	#6	#7	#8	#9	#10	#11
ALL BARS, EXCEPT TOP BARS IN SPANS OVER 24'	23"	28"	34"	39"	45"	68"	76"	85"
TOP BARS IN SPANS OVER 24'	23"	28"	34"	53"	60"	77"	97"	120"

REINFORCEMENT NOTES:

SPLICES IN TOP MAIN BARS TO BE LOCATED AT CENTER OF SPAN.
SPLICES IN BOTTOM MAIN BARS TO BE LOCATED AT BENT.
SPACING OF ALL TRANSVERSE BARS IS MEASURED ALONG CENTERLINE OF ROADWAY.
PLACE ALL TRANSVERSE BARS PARALLEL TO BENT.

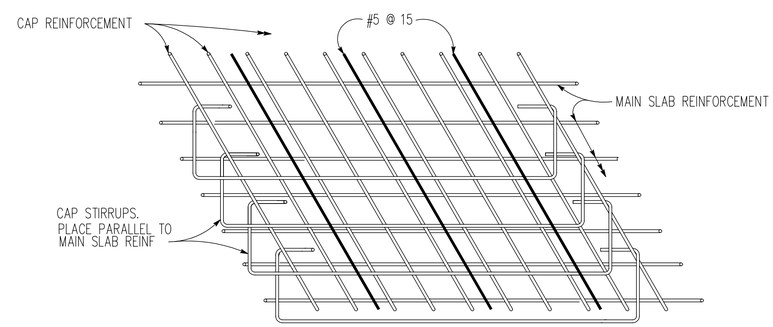

TOP SLAB REINFORCEMENT AT BENT

NOTE: VIEW FOR MAIN SPAN OVER 24'.
BAR PLACEMENT SIMILAR FOR SPANS UNDER 24'

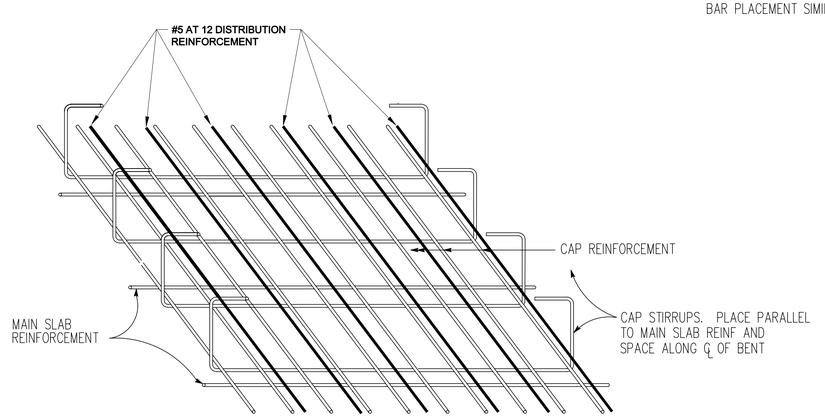

FLUSH CAP

BOTTOM SLAB REINFORCEMENT AT BENT

Not for Bidding Purposes

DESIGN OVERSIGHT	DESIGN	BY S. BURNS	CHECKED C. SERRAHN
SIGN OFF DATE	DETAILS	BY C. PHELPS	CHECKED S. BURNS
	QUANTITIES	BY M. WARGULA	CHECKED S. BURNS

PREPARED FOR THE STATE OF CALIFORNIA DEPARTMENT OF TRANSPORTATION

STEPHEN C. BURNS — PROJECT ENGINEER

BRIDGE NO. 08C0379 — POST MILES –

REEDS CREEK ROAD AT PINE CREEK BRIDGE

SLAB REINFORCEMENT DETAILS ST-9

DESIGN DETAIL SHEET (ENGLISH) (REV. 03/14/12)

ORIGINAL SCALE IN INCHES FOR REDUCED PLANS 0 1 2 3

UNIT:
PROJECT NUMBER & PHASE: 305411 CONTRACT NO.:

DISREGARD PRINTS BEARING EARLIER REVISION DATES

REVISION DATES | SHEET 16 | OF 21

FILE => S-9.dwg

USERNAME => cphelps DATE PLOTTED => 4/30/2015 TIME PLOTTED => 4:38 PM

DIST	COUNTY	ROUTE	POST MILES TOTAL PROJECT	SHEET No	TOTAL SHEETS
2	TEH	CR		17	21

REGISTERED STRUCTURAL ENGINEER — DATE 4/23/2015

PLANS APPROVAL DATE

REGISTERED PROFESSIONAL ENGINEER STEPHEN C. BURNS No. S4229 Exp. 6/30/16 STRUCTURAL STATE OF CALIFORNIA

The State of California or its officers or agents shall not be responsible for the accuracy or completeness of scanned copies of this plan sheet.

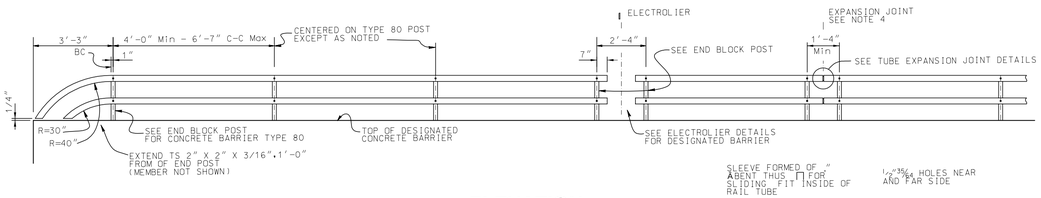

ELEVATION

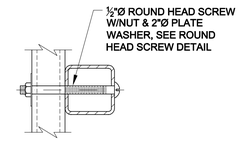

TUBE CONNECTION

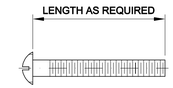

ROUND HEAD SCREW

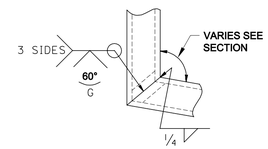

DETAIL A

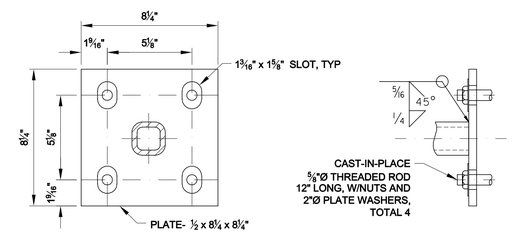

BASE PLATE

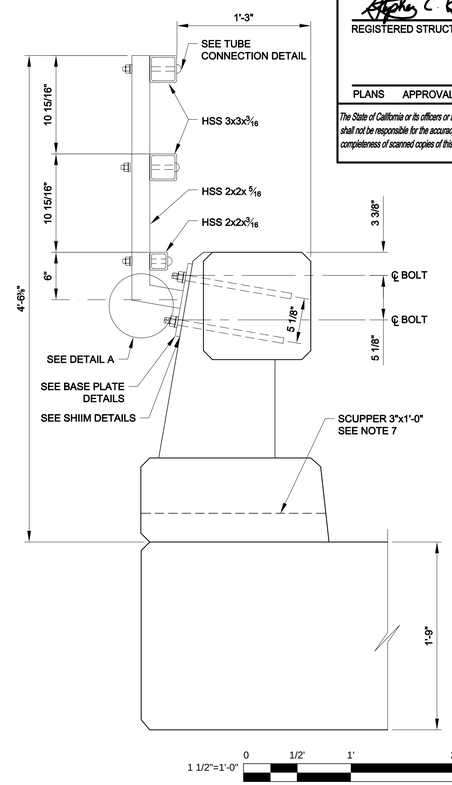

TYPE 80 BICYCLE RAILING DETAIL

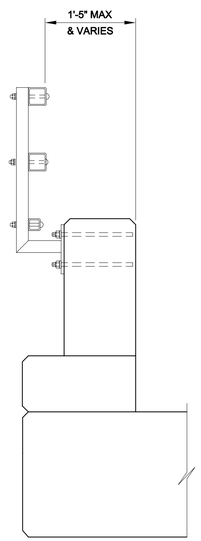

NOTE: FOR DETAILS NOT SHOWN, SEE TYPE 80 BICYCLE RAILING DETAIL

TYPE 80 END BLOCK POST

1" = 1'-0"

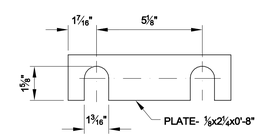

SHIM

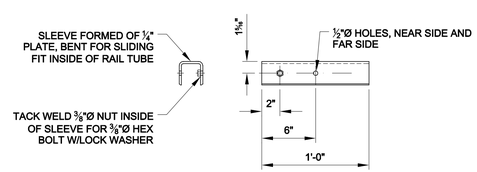

SLEEVE

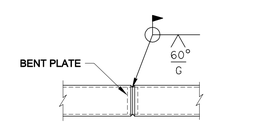

WELDED SPLICE

TUBULAR BICYCLE RAILING

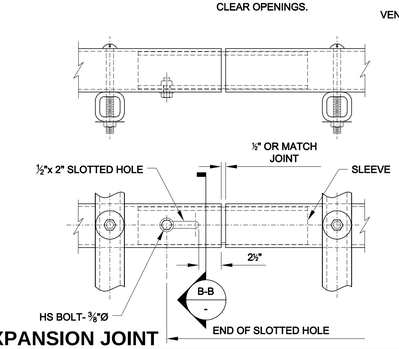

TUBE EXPANSION JOINT

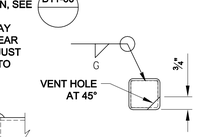

RAIL CAP

SECTION B-B

NOTES:

1. POST TO BE NORMAL TO RAILING
2. RAIL TUBES TO BE SHOP BENT OR FABRICATED TO FIT HORIZONTAL CURVE WHEN RADIUS IS LESS THAN 12"
3. TUBE EXPANSION JOINTS TO BE LOCATED IN THE TUBES SPANNING DECK OR WALL JOINTS. INCREASE JOINT WIDTH IN TUBES TO MATCH EXPANSION JOINT WIDTH. INCREASE SLEEVE LENGTH CORRESPONDINGLY
4. TOP RAIL TUBE TO BE CONTINUOUS OVER NOT LESS THAN TWO POST'S EXCEPT AS SHORT POST SPACING IS PERMITTED NEAR DECK OR WALL JOINTS, ELECTROLIERS OR OTHER RAIL DISCONTINUITIES AS NOTED
5. SEE PLANS FOR LIMITS OF TUBULAR HAND RAILING
6. FOR DETAILS NOT SHOWN, SEE B11-60
7. PLACE SCUPPERS MIDWAY BETWEEN RAIL POSTS NEAR CENTERLINE SPANS. ADJUST REINFORCING SPACING TO CLEAR OPENINGS.

Not for Bidding Purposes

DESIGN OVERSIGHT	DESIGN	BY S. BURNS	CHECKED C. SERRAHN	PREPARED FOR THE STATE OF CALIFORNIA DEPARTMENT OF TRANSPORTATION	STEPHEN C. BURNS PROJECT ENGINEER
SIGN OFF DATE	DETAILS	BY C. PHELPS	CHECKED S. BURNS		BRIDGE NO. 08C0379 / POST MILES –
	QUANTITIES	BY M. WARGULA	CHECKED S. BURNS		

REEDS CREEK ROAD AT PINE CREEK BRIDGE

BRIDGE RAILING DETAILS — ST-10

DESIGN DETAIL SHEET (ENGLISH) (REV. 03/14/12)

ORIGINAL SCALE IN INCHES FOR REDUCED PLANS 0 1 2 3

UNIT: PROJECT NUMBER & PHASE: 305411 CONTRACT NO.:

DISREGARD PRINTS BEARING EARLIER REVISION DATES

REVISION DATES | SHEET 17 | OF 21

FILE => S-10.dwg

USERNAME => cphelps DATE PLOTTED => 4/30/2015 TIME PLOTTED => 4:38 PM

DIST	COUNTY	ROUTE	POST MILES TOTAL PROJECT	SHEET No	TOTAL SHEETS
2	TEH	CR		18	21

REGISTERED STRUCTURAL ENGINEER — DATE 4/23/2015

PLANS APPROVAL DATE

REGISTERED PROFESSIONAL ENGINEER STEPHEN C. BURNS No. S4229 Exp. 6/30/16 STRUCTURAL STATE OF CALIFORNIA

The State of California or its officers or agents shall not be responsible for the accuracy or completeness of scanned copies of this plan sheet.

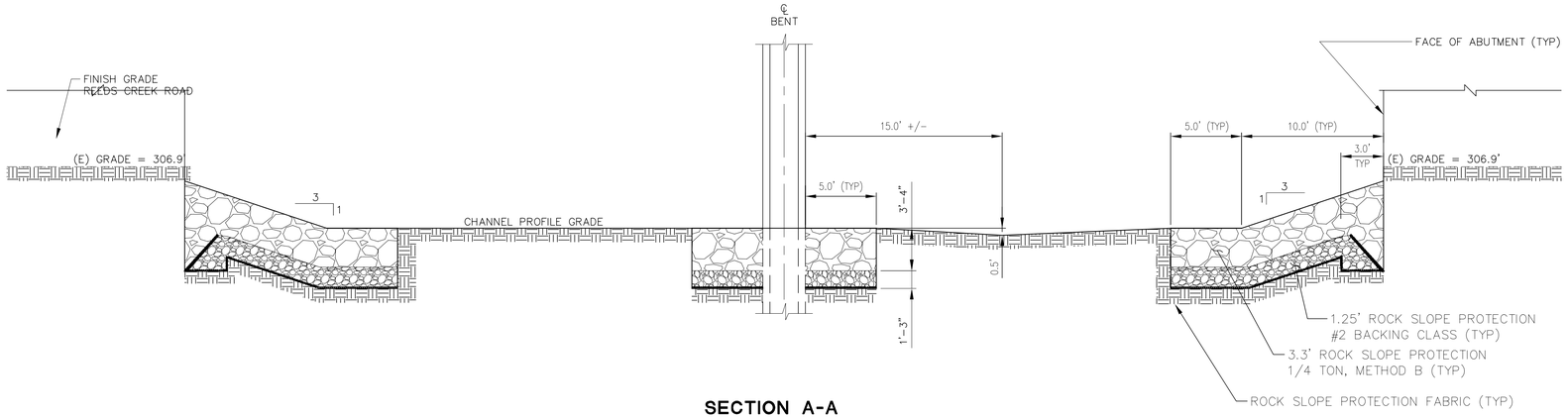

SECTION A-A

SCALE: 1"=5'

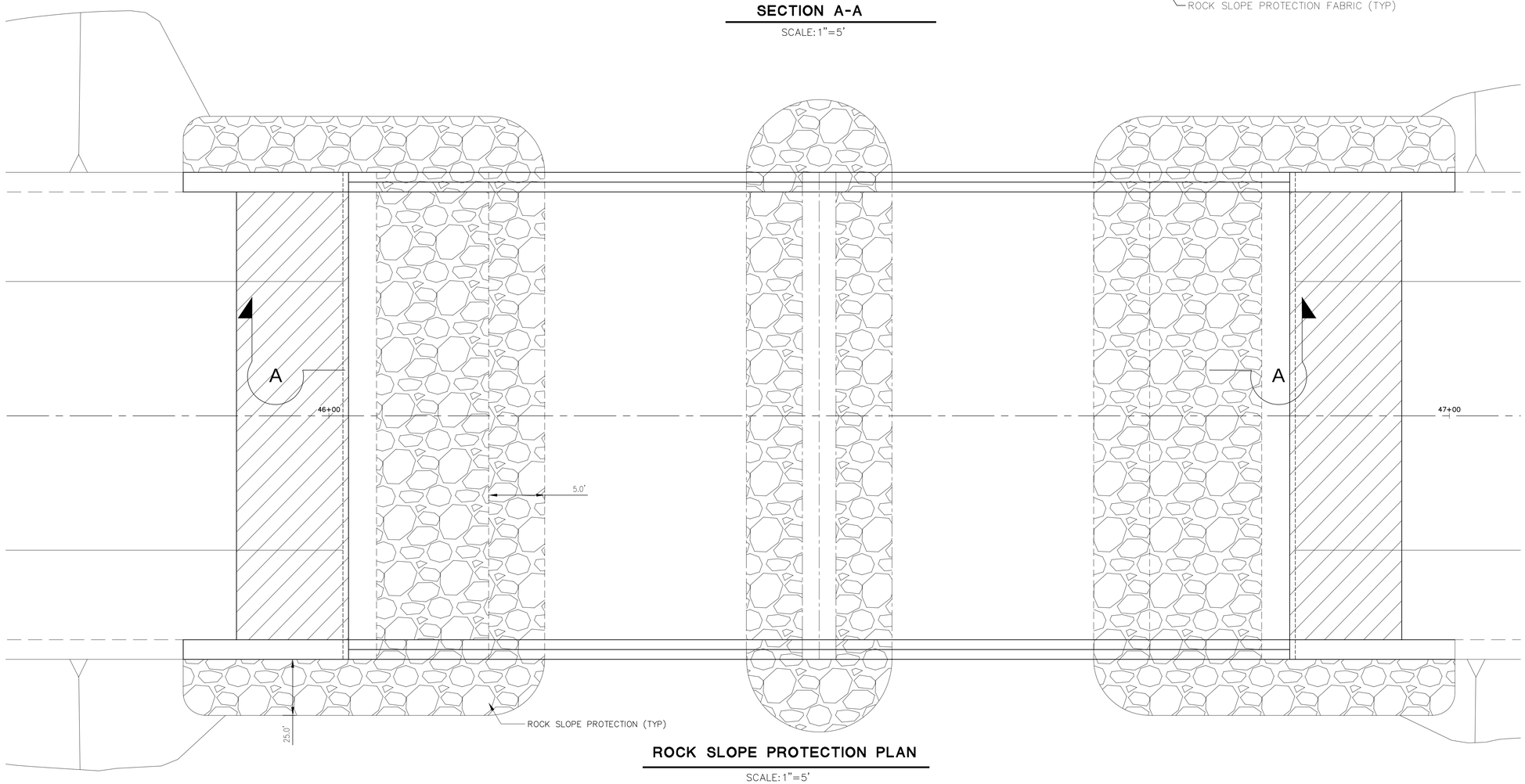

ROCK SLOPE PROTECTION PLAN

SCALE: 1"=5'

Not for Bidding Purposes

DESIGN OVERSIGHT	DESIGN	BY S. BURNS	CHECKED C. SERRAHN	LOAD & RESISTANCE FACTOR DESIGN	LIVE LOADING: PERMIT DESIGN VEHICLE	
	DETAILS	BY C. PHELPS	CHECKED S. BURNS	LAYOUT	BY C. PHELPS	CHECKED S. BURNS
SIGN OFF DATE	QUANTITIES	BY M. WARGULA	CHECKED S. BURNS	SPECIFICATIONS	BY S. BURNS	PLANS AND SPECS COMPARED W. SILVA

PREPARED FOR THE STATE OF CALIFORNIA DEPARTMENT OF TRANSPORTATION

STEPHEN C. BURNS — PROJECT ENGINEER

BRIDGE NO. 08C0379 — POST MILES –

REEDS CREEK ROAD AT PINE CREEK BRIDGE

ROCK SLOPE PROTECTION PLAN — ST-11

DESIGN GENERAL PLAN SHEET (ENGLISH) (REV. 03/14/12)

ORIGINAL SCALE IN INCHES FOR REDUCED PLANS 0 1 2 3

UNIT:
PROJECT NUMBER & PHASE: 305411 — CONTRACT NO.:

DISREGARD PRINTS BEARING EARLIER REVISION DATES

REVISION DATES | SHEET 18 | OF 21

FILE => S-11.dwg

USERNAME => cphelps — DATE PLOTTED => 4/30/2015 — TIME PLOTTED => 4:39 PM

DIST	COUNTY	ROUTE	POST MILES TOTAL PROJECT	SHEET No	TOTAL SHEETS
2	TEH	CR		19	21

REGISTERED STRUCTURAL ENGINEER — DATE 4/23/2015

PLANS APPROVAL DATE

REGISTERED PROFESSIONAL ENGINEER — STEPHEN C. BURNS — No. S4229 — Exp. 6/30/16 — STRUCTURAL — STATE OF CALIFORNIA

The State of California or its officers or agents shall not be responsible for the accuracy or completeness of scanned copies of this plan sheet.

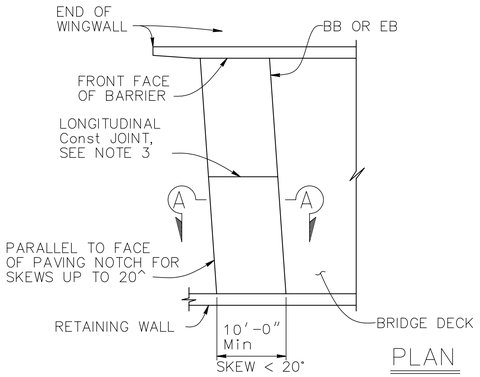

PLAN

NO SCALE

APPROACH SLAB TRANSVERSE CONTACT JOINT	
APPROACH SKEW	AC ROADWAY PAVEMENT
< 20°	PARALLEL TO FACE OF PN

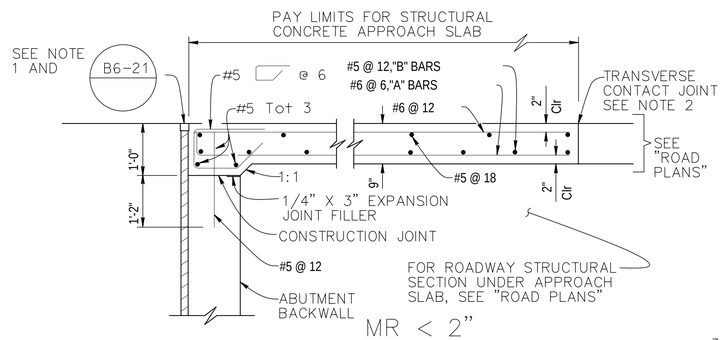

MR < 2"

SEAT TYPE ABUTMENT

SECTION A–A

NO SCALE

NOTE: Seat type abutment shown, for diaphragm type abutment, see "ABUTMENT TIE DETAILS"

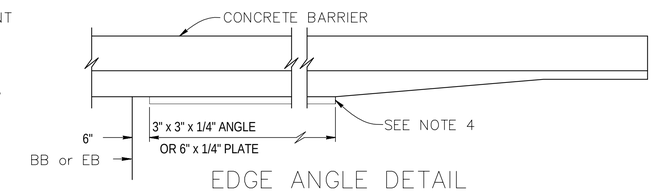

EDGE ANGLE DETAIL

?" = 1'-0"

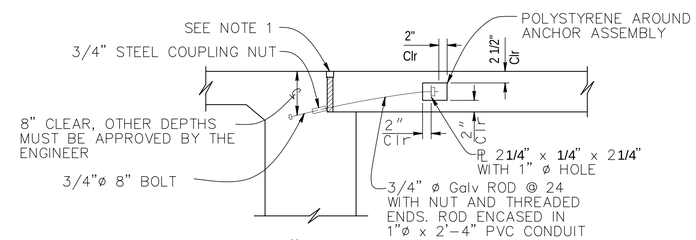

9" PAVING NOTCH

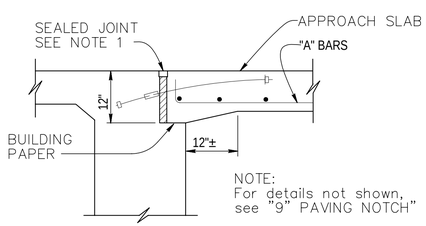

12" PAVING NOTCH

DIAPHRAGM TYPE ABUTMENT

ABUTMENT TIE DETAILS

NO SCALE

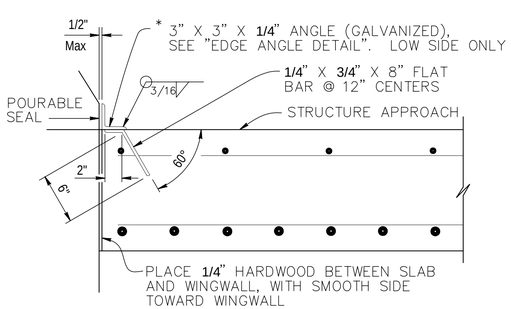

* (TO BE USED WITH CONCRETE BARRIER WITH VERTICAL FACE)

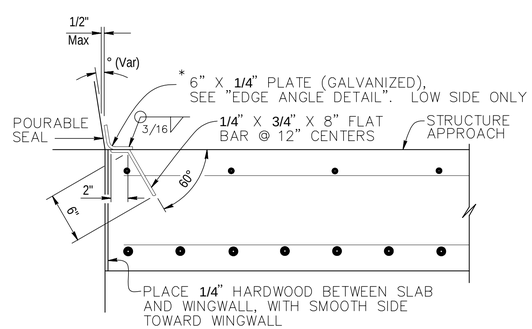

* (TO BE USED WITH CONCRETE BARRIER WITH SLOPING FACE)

DETAIL B

NO SCALE

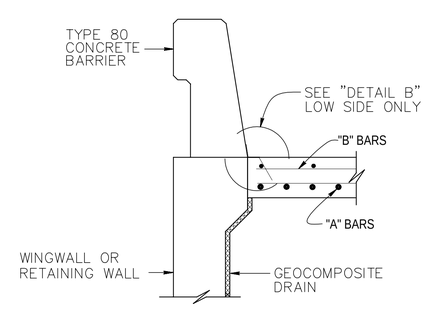

SECTION C–C

NO SCALE

NOTES:

1. For details not noted or shown, see Structure Plans. Adjust bar reinforcement to clear a sawcut for sealed joint, when required
2. For transverse contact joint with new PCC paving, refer to Standard Plan P10
3. Longitudinal construction joints, when permitted by the Engineer, shall be located on lane lines
4. End angle or plate at beginning of barrier transition, end of wingwall or end of structure approach as applicable
5. At the Contractor's option, approach slab transverse reinforcement may be placed parallel to paving notch. Spacing of transverse reinforcement is measured along roadway
6. For drainage details, see Structure Plans.

Not for Bidding Purposes

DESIGN	BY S. BURNS	CHECKED C. SERRAHN	
DETAILS	BY C. PHELPS	CHECKED S. BURNS	
QUANTITIES	BY M. WARGULA	CHECKED S. BURNS	

DESIGN OVERSIGHT

SIGN OFF DATE

DESIGN DETAIL SHEET (ENGLISH) (REV. 03/14/12)

ORIGINAL SCALE IN INCHES FOR REDUCED PLANS 0 1 2 3

PREPARED FOR THE STATE OF CALIFORNIA DEPARTMENT OF TRANSPORTATION

STEPHEN C. BURNS — PROJECT ENGINEER

BRIDGE NO. 08C0379

POST MILES –

REEDS CREEK ROAD AT PINE CREEK BRIDGE

DECK DETAILS

ST-12

UNIT:

PROJECT NUMBER & PHASE: 305411

CONTRACT NO.:

DISREGARD PRINTS BEARING EARLIER REVISION DATES

REVISION DATES

SHEET 19 OF 21

FILE => S-12.dwg

USERNAME => cphelps DATE PLOTTED => 4/30/2015 TIME PLOTTED => 4:38 PM

DIST	COUNTY	ROUTE	POST MILES TOTAL PROJECT	SHEET No	TOTAL SHEETS
2	TEH	CR		20	21

REGISTERED CIVIL ENGINEER — DATE 4/23/15

BLACKBURN CONSULTING
2491 BOATMAN AVENUE
WEST SACRAMENTO, CA 95691 **File No. 1295.1**

PLANS APPROVAL DATE

The State of California or its officers or agents shall not be responsible for the accuracy or completeness of scanned copies of this plan sheet.

REGISTERED PROFESSIONAL ENGINEER — DAVID J. MORRELL — No. C60578 — Exp. 12/31/16 — CIVIL — STATE OF CALIFORNIA

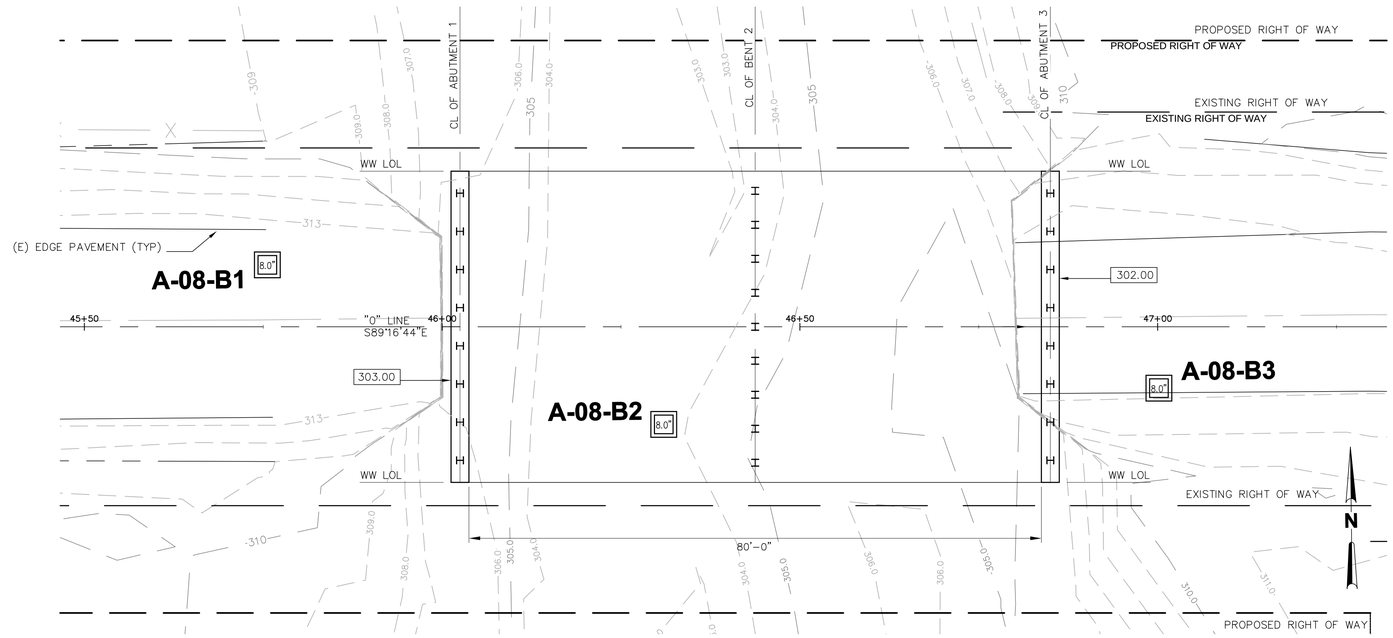

PLAN
1" = 10'

NOTES:

1. ALL PILES SHOWN
2. ELEVATION INDICATES BOTTOM OF FOOTING

BENCHMARKS:

3. Field classification of soils was in accordance with the Caltrans Rock Logging, Classification, and Presentation Manual (June 2007). Log of Test Borings 2 of 2, "Soil Legend".
4. Standard Penetration tests were performed in accordance with 1586–99 using a hammer operated with an automated drop system. rods were 1 5/8–inch diameter "A"–rods; sampler was driven with brass liners.
5. "2.4 inch sampler": ID=2.4 inch, OD=2.9 inch. Driven in same manner as SPT ("1.4 inch") sampler.
6. The length of each sampled interval is shown graphically on the boring log. Whole number blow counts ("N") represent the "standard penetration resistance" interval in accordance with ASTM D1586–99. Where less than 1 foot of penetration is achieved, the blow count is for that fraction of the "standard penetration resistance" interval actually penetrated.
7. Consistency of soils shown in ( ) where estimated.
8. Groundwater surface elevations are subject to seasonal fluctuations and may occur at higher or lower elevations depending on the conditions at any particular time.
9. Boring elevation was estimated based on topography provided by Tehama County Department of Public Works.
10. Electronic media for plan view provided by GHD, August 2013.
11. The "Log of Test Borings" drawing is included with plans in accordance with Section 2–1.03 of Caltrans "Standard Specifications".

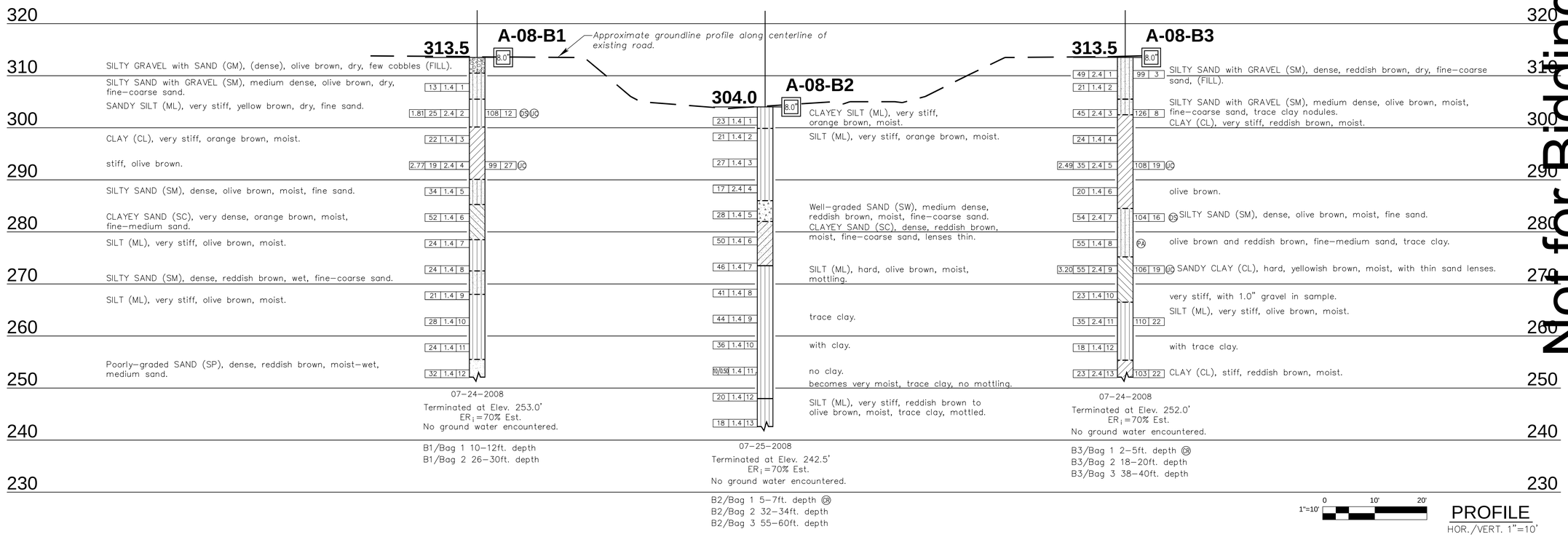

1"=10' 0 10' 20'

PROFILE
HOR./VERT. 1"=10'

Not for Bidding Purposes

DESIGN OVERSIGHT	DRAWN BY	M. ROBERTSON	A. SHINNEFIELD FIELD INVESTIGATION BY:	PREPARED FOR THE STATE OF CALIFORNIA DEPARTMENT OF TRANSPORTATION	STEPHEN C. BURNS PROJECT ENGINEER
SIGN OFF DATE	CHECKED BY	D. MORRELL	DATE: 7/25/08		

BRIDGE NO. 08C0379 — POST MILES –

REEDS CREEK ROAD AT PINE CREEK BRIDGE
LOG OF TEST BORINGS 1 OF 2 — ST-13

GS CIVIL LOG OF TEST BORINGS SHEET (ENGLISH) (REV. 03/14/12)

ORIGINAL SCALE IN INCHES FOR REDUCED PLANS 0 1 2 3

UNIT:
PROJECT NUMBER & PHASE: 305411 CONTRACT NO.:

DISREGARD PRINTS BEARING EARLIER REVISION DATES

REVISION DATES				SHEET	OF
				20	21

FILE => S-13.dwg

USERNAME => cpiepiqs DATE PLOTTED => 4/30/2015 TIME PLOTTED => 4:39 PM

DIST	COUNTY	ROUTE	POST MILES TOTAL PROJECT	SHEET No	TOTAL SHEETS
2	TEH	CR		21	21

David J. Morrell 4/23/15
REGISTERED CIVIL ENGINEER DATE

BLACKBURN CONSULTING
2491 BOATMAN AVENUE
WEST SACRAMENTO, CA 95691 **File No. 1295.1**

PLANS APPROVAL DATE

REGISTERED PROFESSIONAL ENGINEER DAVID J. MORRELL No. C60578 Exp. 12/31/16 CIVIL STATE OF CALIFORNIA

The State of California or its officers or agents shall not be responsible for the accuracy or completeness of scanned copies of this plan sheet.

Not for Bidding Purposes

REFERENCE: CALTRANS SOIL & ROCK LOGGING, CLASSIFICATION, AND PRESENTATION MANUAL, (JUNE, 2007)

GROUP SYMBOLS AND NAMES

Graphic/Symbol	Group Names
GW	Well-graded GRAVEL Well-graded GRAVEL with SAND
GP	Poorly-graded GRAVEL Poorly-graded GRAVEL with SAND
GW-GM	Well-graded GRAVEL with SILT Well-graded GRAVEL with SILT and SAND
GW-GC	Well-graded GRAVEL with CLAY (or SILTY CLAY) Well-graded GRAVEL with CLAY and SAND (or SILTY CLAY and SAND)
GP-GM	Poorly-graded GRAVEL with SILT Poorly-graded GRAVEL with SILT and SAND
GP-GC	Poorly-graded GRAVEL with CLAY (or SILTY CLAY) Poorly-graded GRAVEL with CLAY and SAND (or SILTY CLAY and SAND)
GM	SILTY GRAVEL SILTY GRAVEL with SAND
GC	CLAYEY GRAVEL CLAYEY GRAVEL with SAND
GC-GM	SILTY, CLAYEY GRAVEL SILTY, CLAYEY GRAVEL with SAND
SW	Well-graded SAND Well-graded SAND with GRAVEL
SP	Poorly-graded SAND Poorly-graded SAND with GRAVEL
SW-SM	Well-graded SAND with SILT Well-graded SAND with SILT and GRAVEL
SW-SC	Well-graded SAND with CLAY (or SILTY CLAY) Well-graded SAND with CLAY and GRAVEL (or SILTY CLAY and GRAVEL)
SP-SM	Poorly-graded SAND with SILT Poorly-graded SAND with SILT and GRAVEL
SP-SC	Poorly-graded SAND with CLAY (or SILTY CLAY) Poorly-graded SAND with CLAY and GRAVEL (or SILTY CLAY and GRAVEL)
SM	SILTY SAND SILTY SAND with GRAVEL
SC	CLAYEY SAND CLAYEY SAND with GRAVEL
SC-SM	SILTY, CLAYEY SAND SILTY, CLAYEY SAND with GRAVEL
PT	PEAT
	COBBLES COBBLES and BOULDERS BOULDERS

Graphic/Symbol	Group Names
CL	Lean CLAY Lean CLAY with SAND Lean CLAY with GRAVEL SANDY lean CLAY SANDY lean CLAY with GRAVEL GRAVELLY lean CLAY GRAVELLY lean CLAY with SAND
CL-ML	SILTY CLAY SILTY CLAY with SAND SILTY CLAY with GRAVEL SANDY SILTY CLAY SANDY SILTY CLAY with GRAVEL GRAVELLY SILTY CLAY GRAVELLY SILTY CLAY with SAND
ML	SILT SILT with SAND SILT with GRAVEL SANDY SILT SANDY SILT with GRAVEL GRAVELLY SILT GRAVELLY SILT with SAND
OL	ORGANIC lean Clay ORGANIC lean Clay with SAND ORGANIC lean Clay with GRAVEL SANDY ORGANIC lean CLAY SANDY ORGANIC lean CLAY with GRAVEL GRAVELLY ORGANIC lean CLAY GRAVELLY ORGANIC lean CLAY with SAND
OL	ORGANIC SILT ORGANIC SILT with SAND ORGANIC SILT with GRAVEL SANDY ORGANIC SILT SANDY ORGANIC SILT with GRAVEL GRAVELLY ORGANIC SILT GRAVELLY ORGANIC SILT with SAND
CH	Fat CLAY Fat CLAY with SAND Fat CLAY with GRAVEL SANDY fat CLAY SANDY fat CLAY with GRAVEL GRAVELLY fat CLAY GRAVELLY fat CLAY with SAND
MH	Elastic SILT Elastic SILT with SAND Elastic SILT with GRAVEL SANDY elastic SILT SANDY elastic SILT with GRAVEL GRAVELLY elastic SILT GRAVELLY elastic SILT with SAND
OH	ORGANIC fat CLAY ORGANIC fat CLAY with SAND ORGANIC fat CLAY with GRAVEL SANDY ORGANIC fat CLAY SANDY ORGANIC fat CLAY with GRAVEL GRAVELLY ORGANIC fat CLAY GRAVELLY ORGANIC fat CLAY with SAND
OH	ORGANIC elastic SILT ORGANIC elastic SILT with SAND ORGANIC elastic SILT with GRAVEL SANDY ORGANIC elastic SILT SANDY ORGANIC elastic SILT with GRAVEL GRAVELLY ORGANIC elastic SILT GRAVELLY ORGANIC elastic SILT with SAND
OH	ORGANIC SOIL ORGANIC SOIL with SAND ORGANIC SOIL with GRAVEL SANDY ORGANIC SOIL SANDY ORGANIC SOIL with GRAVEL GRAVELLY ORGANIC SOIL GRAVELLY ORGANIC SOIL with SAND

FIELD AND LABORATORY TESTING

- (C) Consolidation (ASTM D 2435–04)
- (CL) Collapse Potential (ASTM D 5333–03)
- (CP) Compaction Curve (CTM 216–06)
- (CR) Corrosivity Testing (CTM 643, CTM 422, CTM 417)
- (CU) Consolidated Undrained Triaxial (ASTM D 4767–04)
- (DS) Direct Shear (ASTM D 3080–04)
- (EI) Expansion Index (ASTM D 4829–03)
- (M) Moisture Content (ASTM D 2216–05)
- (OC) Organic Content–% (ASTM D 2974–07)
- (P) Permeability (CTM 220–05)
- (PA) Particle Size Analysis (ASTM D 422–63) (2002)
- (PI) Platicity Index (AASHTO T 90–00) Liquid Limit (AASHTO T 89–02)
- (PL) Point Load Index (ASTM D 5731–05)
- (PM) Pressure Meter
- (PP) Pocket Penetrometer
- (R) R–Value (CTM 301–00)
- (SE) Sand Equivalent (CTM 217–99)
- (SG) Specific Gravity (AASHTO T 100–06)
- (SL) Shrinkage Limit (ASTM D 427–04)
- (SW) Swell Potential (ASTM D 4546–03)
- (TV) Pocket Torvane
- (UC) Unconfined Compression–Soil (ASTM D 2166–06) Unconfined Compression–Rock (ASTM D 2938–95) (2002)
- (UU) Unconsolidated Undrained Triaxial (ASTM D 2850–03)
- (UW) Unit Weight (ASTM D 2937–04)
- (VS) Vane Shear (AASHTO T 223–96) (2004)

APPARENT DENSITY OF COHESIONLESS SOILS

Description	SPT N_{60} –Value (Blows / 12 in.)
Very Loose	0 – 4
Loose	5 – 10
Medium Dense	11 – 30
Dense	31 – 50
Very Dense	> 50

MOISTURE

Description	Criteria
Dry	Absence of moisture, dusty, dry to the touch
Moist	Damp but no visible water
Wet	Visible free water, usually soil is below water table

PERCENT OR PROPORTION OF SOILS

Description	Criteria
Trace	Particles are present but estimated to be less than 5%
Few	5 to 10%
Little	15 to 25%
Some	30 to 45%
Mostly	50 to 100%

PARTICLE SIZE

Description		Size
Boulder		>12 in.
Cobble		3 to 12 in.
Gravel	Coarse	3/4 to 3 in.
	Fine	No. 4 to 3/4 in.
Sand	Coarse	No. 10 to No. 4
	Medium	No. 40 to No. 10
	Fine	No. 200 to No. 40

CEMENTATION

Description	Criteria
Weak	Crumbles or breaks with handling or little finger pressure.
Moderate	Crumbles or breaks with considerable finger pressure.
Strong	Will not crumble or break with finger pressure.

CONSISTENCY OF COHESIVE SOILS

Description	Unconfined Compressive Strength (tsf)	Pocket Penetrometer Measurement (tsf)	Torvane Measurement (tsf)	Field Approximation
Very Soft	<0.25	<0.25	<0.12	Easily penetrated several inches by fist
Soft	0.25 to 0.50	0.25 to 0.50	0.12 to 0.25	Easily penetrated several inches by thumb
Medium Stiff	0.50 to 1.0	0.50 to 1.0	0.25 to 0.50	Penetrated several inches by thumb with moderate effort
Stiff	1 to 2	1 to 2	0.50 to 1.0	Readily indented by thumb but penetrated only with great effort
Very Stiff	2 to 4	2 to 4	1.0 to 2.0	Readily indented by thumbnail
Hard	> 4.0	> 4.0	> 2.0	Indented by thumbnail with difficulty

PLASTICITY OF FINE-GRAINED SOILS

Description	Criteria
Nonplastic	A 1/8–in. thread cannot be rolled at any water content.
Low	The thread can barely be rolled and the lump cannot be formed when drier than plastic limit.
Medium	The thread is easy to roll and not much time is required to reach the plastic limit. The thread cannot be rerolled after reaching the plastic limit. The lump crumbles when drier than the plastic limit.
High	It takes considerable time rolling and kneading to reach the plastic limit. The thread can be rerolled several times after reaching the plastic limit. The lump can be formed without crumbling when drier than the plastic limit.

BOREHOLE IDENTIFICATION

Symbol	Hole Type	Description
Size	A	Auger Boring
Size	R P	Rotary drilled boring Rotary percussion boring (air)
Size	R	Rotary drilled diamond core
Size	HD HA	Hand driven (1–inch soil tube) Hand Auger
●	D	Dynamic Cone Penetration Boring
▲	CPT	Cone Penetration Test (ASTM D 5778–95)
□	O	Other

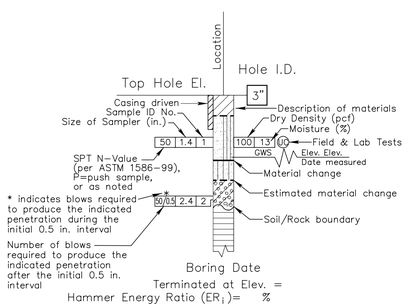

ROTARY BORING

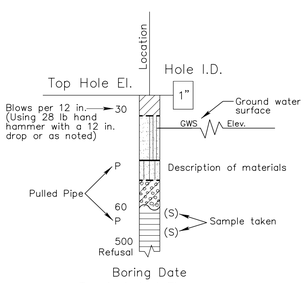

HAND BORING

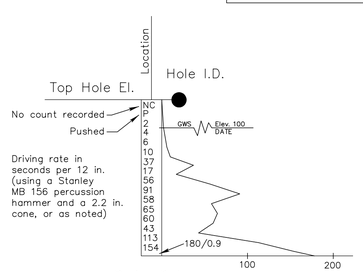

DYNAMIC CONE PENETRATON BORING

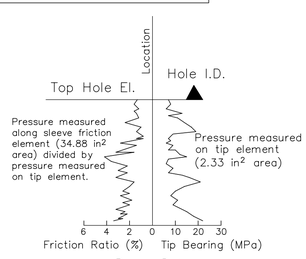

CONE PENETRATON TEST (CPT) SOUNDING

DESIGN OVERSIGHT	DRAWN BY	M. ROBERTSON	A. SHINNEFIELD FIELD INVESTIGATION BY:	PREPARED FOR THE STATE OF CALIFORNIA DEPARTMENT OF TRANSPORTATION	STEPHEN C. BURNS PROJECT ENGINEER	BRIDGE NO. 08C0379	REEDS CREEK ROAD AT PINE CREEK BRIDGE
SIGN OFF DATE	CHECKED BY	D. MORRELL	DATE: 7/25/08			POST MILES --	LOG OF TEST BORINGS 2 OF 2 — ST-14

GS CIVIL LOG OF TEST BORINGS SHEET (ENGLISH) (REV. 03/14/12)

ORIGINAL SCALE IN INCHES FOR REDUCED PLANS 0 1 2 3

UNIT:
PROJECT NUMBER & PHASE: 305411 CONTRACT NO.:

DISREGARD PRINTS BEARING EARLIER REVISION DATES

REVISION DATES | SHEET 21 | OF 21

FILE => S-14.dwg

USERNAME => crpheips DATE PLOTTED => 4/30/2015 TIME PLOTTED => 4:39 PM