Dist	COUNTY	ROUTE	POST MILES TOTAL PROJECT	SHEET No.	TOTAL SHEETS
2	TEH	JF		1	138

TEHAMA COUNTY

DEPARTMENT OF PUBLIC WORKS

PROJECT PLANS FOR CONSTRUCTION ON

JELLYS FERRY ROAD

IN TEHAMA COUNTY
ON JELLYS FERRY ROAD
SACRAMENTO RIVER BRIDGE Br. No. 08C-0374
SACRAMENTO RIVER OVERFLOW BRIDGE Br. No. 08C-0378
FROM 0.15 MILES NORTH OF RIVERS EDGE DRIVE
TO SARON FRUIT COLONY ROAD
FEDERAL-AID BRIDGE REPLACEMENT BRLSZD-5908 (031)
EA 0244004L

TO BE SUPPLEMENTED BY STATE OF CALIFORNIA STANDARD PLANS DATED 2010

INDEX OF PLANS

SHEET No.	PLAN SHEET ID	DESCRIPTION
1	T-1	TITLE SHEET
2-6	X-1 TO X-5	TYPICAL CROSS SECTIONS
7-8	K-1 TO K-2	KEY MAP AND LINE INDEX
9	PC-1	PROJECT CONTROL
10-15	L-1 TO L-6	LAYOUT
16-25	PS-1 TO PS-10	PROFILE & SUPERELEVATION DIAGRAM
26-35	C-1 TO C-10	CONSTRUCTION DETAILS
36-41	G-1 TO G-6	CONTOUR GRADING
42	GD-1	CONTOUR GRADING DETAILS
43-46	EC-1 TO EC-4	EROSION CONTROL
47	ECD-1	EROSION CONTROL DETAILS
48-50	DP-1 TO DP-3	DRAINAGE PROFILES
51-53	DD-1 TO DD-3	DRAINAGE DETAILS AND QUANTITIES
54	CAS-1	CONSTRUCTION AREA SIGNS
55-61	SC-1 TO SC-7	STAGE CONSTRUCTION PLAN
62-66	SCD-1 TO SCD-5	STAGE CONSTRUCTION DETAILS
67-73	TH-1 TO TH-7	TRAFFIC HANDLING PLAN
74	THD-1	TRAFFIC HANDLING DETAILS
75-77	Q-1 TO Q-3	SUMMARY OF QUANTITIES
78-81	R-1 TO R-4	RETAINING WALL

STRUCTURE PLANS

82-114	SACRAMENTO RIVER BRIDGE, Br. No. 08C-0374
115-138	SACRAMENTO OVERFLOW BRIDGE, Br. No. 08C-0378

LOCATION MAP

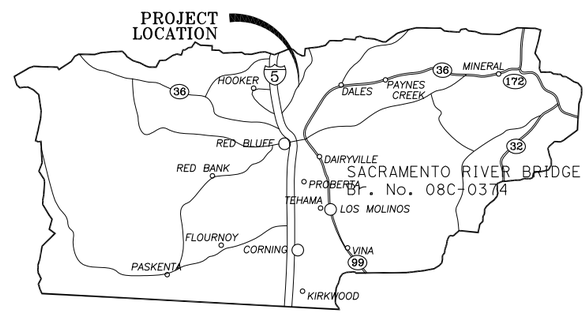

VICINITY MAP

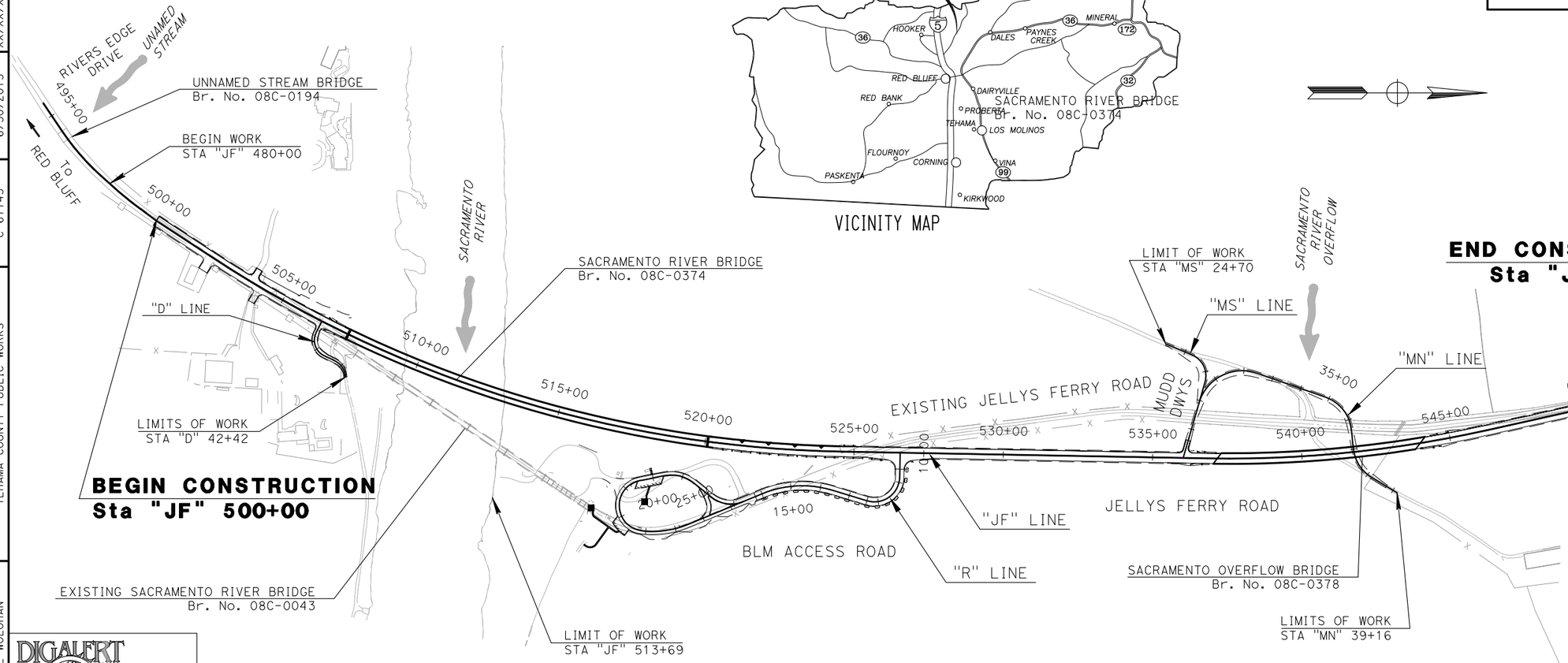

APPROVED BY:

GARY ANTONE — DATE
DIRECTOR OF PUBLIC WORKS

PROJECT ENGINEER — DATE
REGISTERED CIVIL ENGINEER

REGISTERED PROFESSIONAL ENGINEER — MICHAEL WOLOHAN — No. C 67743 — Exp. 6/30/15 — CIVIL — STATE OF CALIFORNIA

T. Y. LIN INTERNATIONAL OR ITS OFFICERS OR AGENTS SHALL NOT BE RESPONSIBLE FOR THE ACCURACY OR COMPLETENESS OF ELECTRONIC COPIES OF THIS PLAN SHEET.

65% SUBMITTAL, NOT FOR CONSTRUCTION

DIGALERT
DIAL TOLL FREE
1-800-227-2600
AT LEAST TWO DAYS BEFORE YOU DIG
UNDERGROUND SERVICE ALERT OF NORTHERN CALIFORNIA

THE CONTRACTOR SHALL POSSESS THE CLASS (OR CLASSES) OF LICENSE AS SPECIFIED IN THE "NOTICE TO BIDDERS."

NO SCALE

T·Y·LIN INTERNATIONAL
1601 RESPONSE RD, SUITE 260
SACRAMENTO, CA 95815

TEHAMA COUNTY PUBLIC WORKS
9380 SAN BENITO AVENUE
GERBER, CA 96035-9701

CONTRACT No. 301691

LAST REVISION XX/XX/XXXX

RELATIVE BORDER SCALE IS IN INCHES 0 1 2 3

APPROVED AS TO IMPACT ON LOCAL FACILITIES AND CONFORMANCE WITH APPLICABLE LOCAL STANDARDS AND PRACTICES AND THAT TECHNICAL OVERSIGHT WAS PERFORMED.

LOCAL AGENCY OVERSIGHT APPROVAL	REGISTRATION No.	LICENSE Exp DATE	DATE SIGNED
TEHAMA COUNTY PUBLIC WORKS	C 67743	6/30/2015	XX/XX/XXXX

PROJECT ENGINEER: MICHAEL WOLOHAN

XRef List: | 054-X-LANDNET | 054-X-TP | 054-C-RD | 054-Drainage | 054-Corridor |
Mar 20, 2015 - 09:04:46 DWG Name: P:\710054 - Jellys Ferry Bridge\500_Engineering\510_Civil\511_CADD\SHEETS\054-T.dwg Updated By: kbewsey

Dist.	COUNTY	ROUTE	POST MILE TOTAL PROJECT	SHEET No.	TOTAL SHEETS
2	TEH	JF		2	138

REGISTERED CIVIL ENGINEER DATE

PLANS APPROVAL DATE

REGISTERED PROFESSIONAL ENGINEER K. BEWSEY No. 71485 Exp. 12/31/15 CIVIL STATE OF CALIFORNIA

T.Y. LIN INTERNATIONAL OR ITS OFFICERS OR AGENTS SHALL NOT BE RESPONSIBLE FOR THE ACCURACY OR COMPLETENESS OF ELECTRONIC COPIES OF THIS PLAN SHEET.

T·Y·LIN INTERNATIONAL
1601 RESPONSE ROAD, SUITE 260
SACRAMENTO, CA 95815

NOTES:

1. ALL DIMENSIONS ARE IN FEET UNLESS OTHERWISE SHOWN.
2. DIMENSIONS OF THE PAVEMENT STRUCTURES (STRUCTURAL SECTIONS) ARE SUBJECT TO TOLERANCES SPECIFIED IN THE STANDARD SPECIFICATION.
3. SUPERELEVATIONS ARE SHOWN ON THE SUPERELEVATION DIAGRAMS
4. EXACT LOCATIONS AND TYPES OF DIKES, GUARD RAILING AND CONCRETE BARRIERS ARE SHOWN ON THE LAYOUT SHEETS AND THE SUMMARY OF QUANTITIES SHEETS.

JELLYS FERRY DESIGN DESIGNATION

ADT (2005)	350	D	-
ADT (2035)	1205	T	10%
DHV	-	V	55 mph
ESAL	-	TI_{20}	7.0

MAJOR COLLECTOR (RURAL)(ROLLING)

BLM ACCESS ROAD DESIGN DESIGNATION

ADT (2009)	20	D	50%
ADT (2035)	35	T	0%
DHV	-	V	15 mph
ESAL	-	TI_{20}	5.0

RECREATIONAL (RURAL)(ROLLING)

LEGEND

ABBREVIATIONS

MGS	MIDWEST GUARDRAIL SYSTEM
SE	SAFETY EDGE

PAVEMENT CLIMATE REGION

INLAND VALLEY

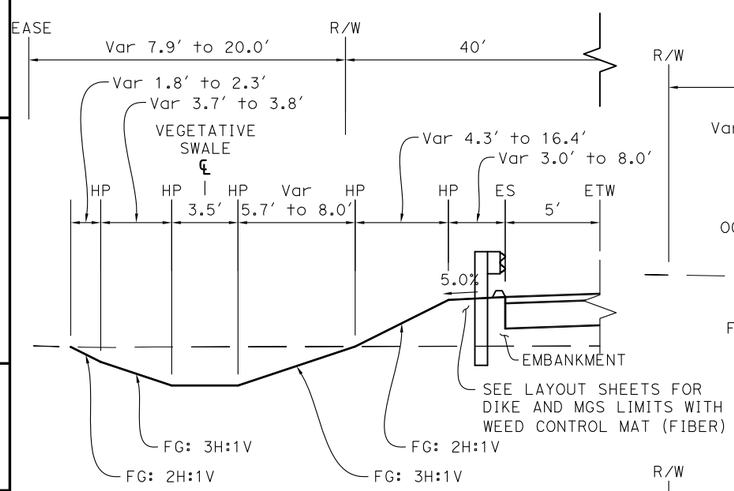

"JF" 505+45.09 to 507+34.33

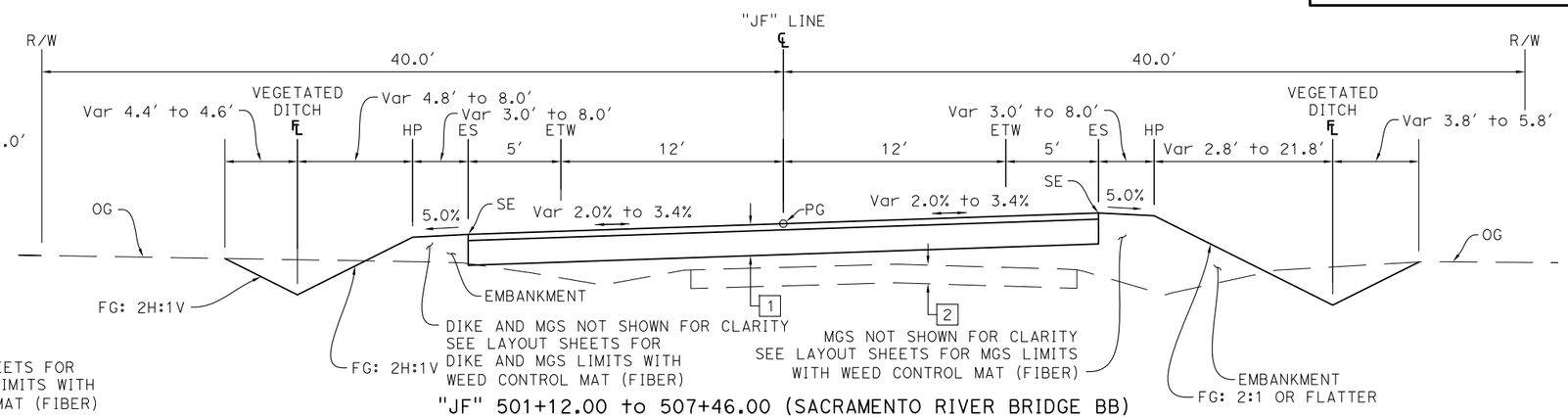

"JF" 501+12.00 to 507+46.00 (SACRAMENTO RIVER BRIDGE BB)

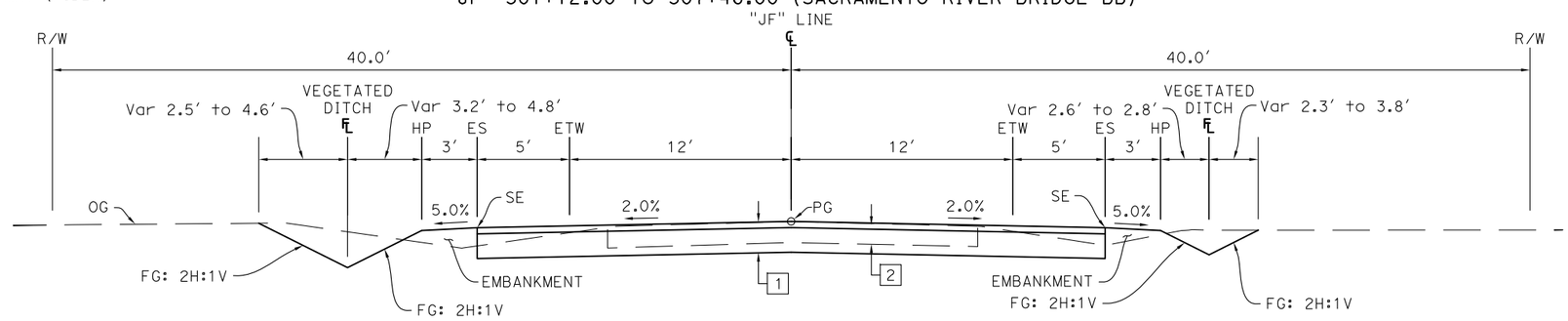

"JF" 500+00.00 to 501+12.00

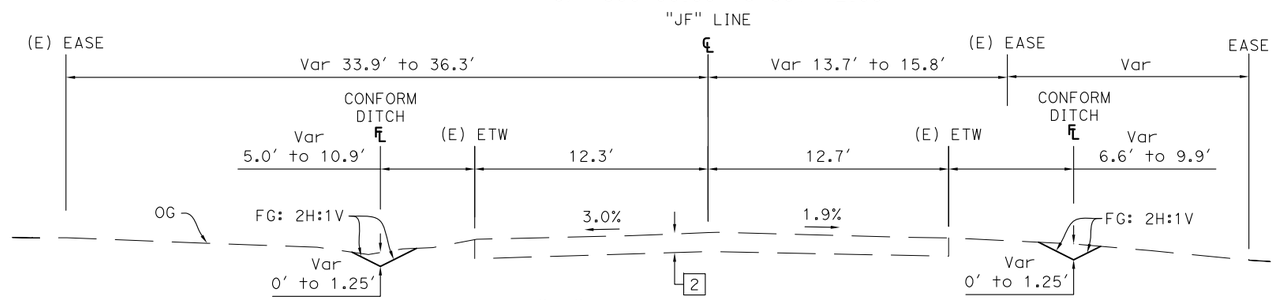

"JF" 499+33.65 to 500+00.00

JELLYS FERRY ROAD

TYPICAL PAVEMENT STRUCTURAL SECTIONS

1	0.35' HMA (TYPE A) 0.85' AB (CLASS 2)
2	EXIST 1"-2" AC 1" AB
3	0.25' HMA (TYPE A) 0.55' AB (CLASS 2)
4	1.20' AB (CLASS 2)
5	0.33' HMA (TYPE A) 0.66' AB (CLASS 2)
6	0.33' TEMPORARY HMA (TYPE A) 0.66' TEMPORARY AB (CLASS 2)

TYPICAL CROSS SECTIONS

NO SCALE

X-1

65% SUBMITTAL, NOT FOR CONSTRUCTION

RELATIVE BORDER SCALE IS IN INCHES 0 1 2 3

REVISED BY	DATE REVISED
K. BEWSEY/ D. ZURCHER	KEITH RHODES
CALCULATED-DESIGNED BY	CHECKED BY
PROJECT ENGINEER	MICHAEL WOLOHAN

TEHAMA COUNTY DEPARTMENT OF PUBLIC WORKS

JELLYS FERRY IMPROVEMENT PROJECT

XRef List: | 054-BRDR |
Mar. 19, 2015 - 20:16:27 DWG Name: P:\710054 - Jellys Ferry Bridge\500_Engineering\510_Civil\511_CADD\SHEETS\054-X.dwg Updated By: DZurcher

Dist.	COUNTY	ROUTE	POST MILE TOTAL PROJECT	SHEET No.	TOTAL SHEETS
2	TEH	JF		3	138

REGISTERED CIVIL ENGINEER DATE

PLANS APPROVAL DATE

REGISTERED PROFESSIONAL ENGINEER K. BEWSEY No. 71485 Exp. 12/31/15 CIVIL STATE OF CALIFORNIA

T.Y. LIN INTERNATIONAL OR ITS OFFICERS OR AGENTS SHALL NOT BE RESPONSIBLE FOR THE ACCURACY OR COMPLETENESS OF ELECTRONIC COPIES OF THIS PLAN SHEET.

T·Y·LIN INTERNATIONAL
1601 RESPONSE ROAD, SUITE 260
SACRAMENTO, CA 95815

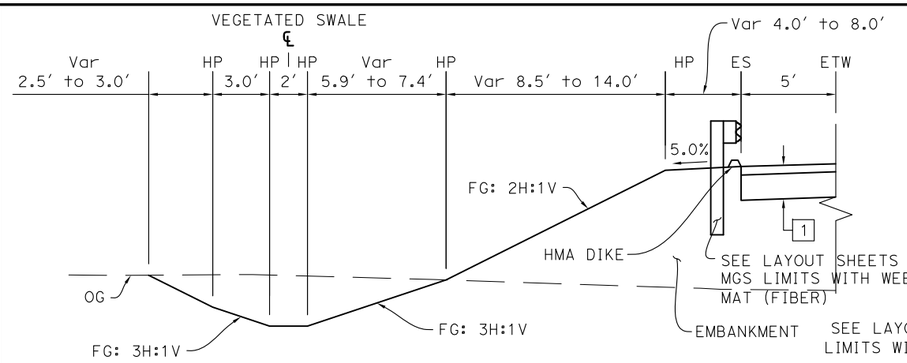

"JF" 536+33.62 to 537+45.30

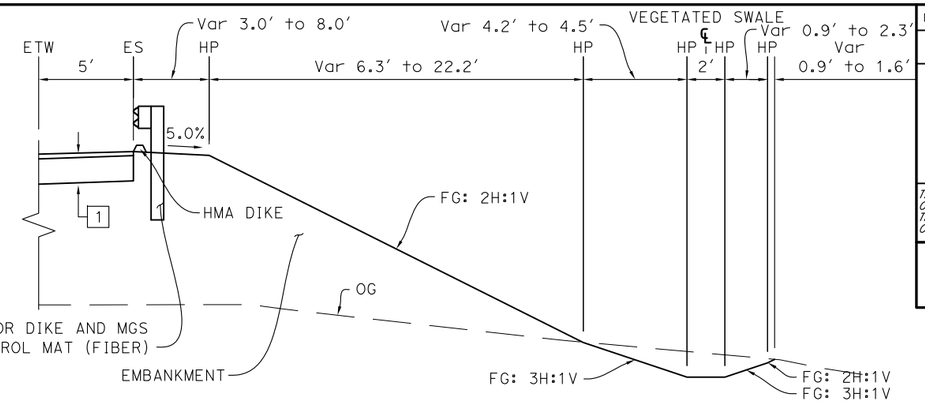

"JF" 535+50.00 to 536+97.07

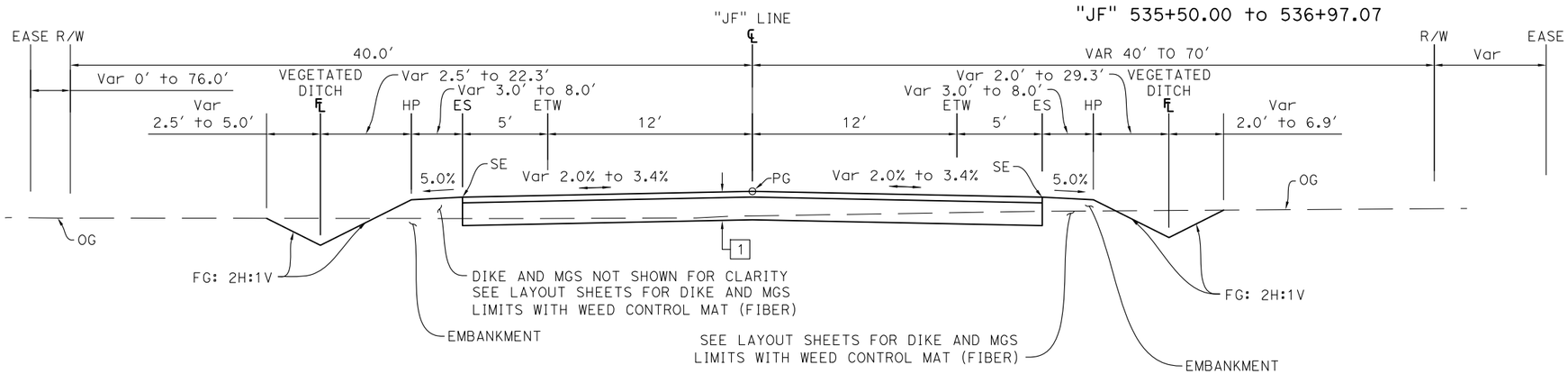

"JF" 524+51.30 to 537+16.50 (SACRAMENTO RIVER OVERFLOW BRIDGE BB)

NOTES:

1. SEE SHEET X-1 FOR NOTES AND LEGEND.

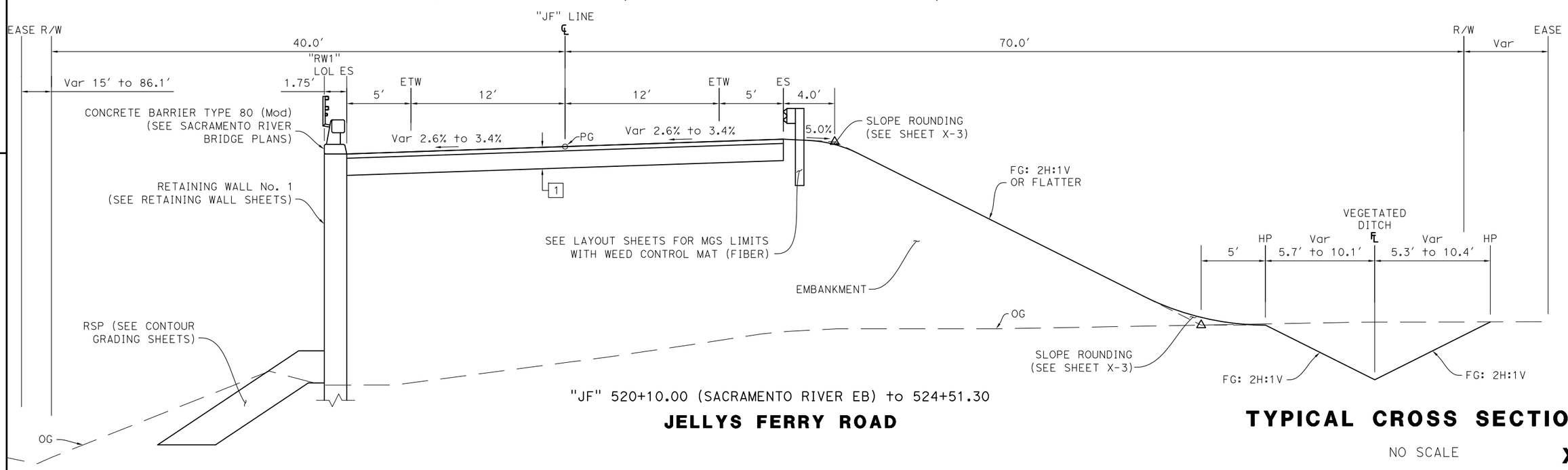

"JF" 520+10.00 (SACRAMENTO RIVER EB) to 524+51.30

JELLYS FERRY ROAD

TYPICAL CROSS SECTIONS

NO SCALE

X-2

65% SUBMITTAL, NOT FOR CONSTRUCTION

RELATIVE BORDER SCALE IS IN INCHES 0 1 2 3

REVISED BY	DATE REVISED

CALCULATED-DESIGNED BY	CHECKED BY
K. BEWSEY/ D. ZURCHER	KEITH RHODES

PROJECT ENGINEER: MICHAEL WOLOHAN

TEHAMA COUNTY DEPARTMENT OF PUBLIC WORKS

JELLYS FERRY IMPROVEMENT PROJECT

XRef List: | 054-BRDR |
Mar. 19, 2015 - 20:16:27 DWG Name: P:\710054 - Jellys Ferry Bridge\500_Engineering\510_Civil\511_CADD\SHEETS\054-X.dwg Updated By: DZurcher

Dist.	COUNTY	ROUTE	POST MILE TOTAL PROJECT	SHEET No.	TOTAL SHEETS
2	TEH	JF		4	138

REGISTERED CIVIL ENGINEER DATE

PLANS APPROVAL DATE

REGISTERED PROFESSIONAL ENGINEER K. BEWSEY No. 71485 Exp. 12/31/15 CIVIL STATE OF CALIFORNIA

T.Y. LIN INTERNATIONAL OR ITS OFFICERS OR AGENTS SHALL NOT BE RESPONSIBLE FOR THE ACCURACY OR COMPLETENESS OF ELECTRONIC COPIES OF THIS PLAN SHEET.

T·Y·LIN INTERNATIONAL
1601 RESPONSE ROAD, SUITE 260
SACRAMENTO, CA 95815

NOTES:

1. SEE SHEET X-1 FOR NOTES AND LEGEND.

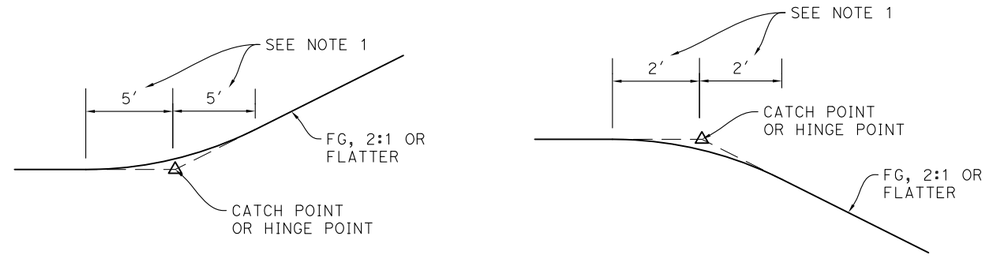

SLOPE ROUNDING DETAIL

NO SCALE

NOTES:

1. SPACE PERMITTING OR AS INSTRUCTED BY THE ENGINEER.

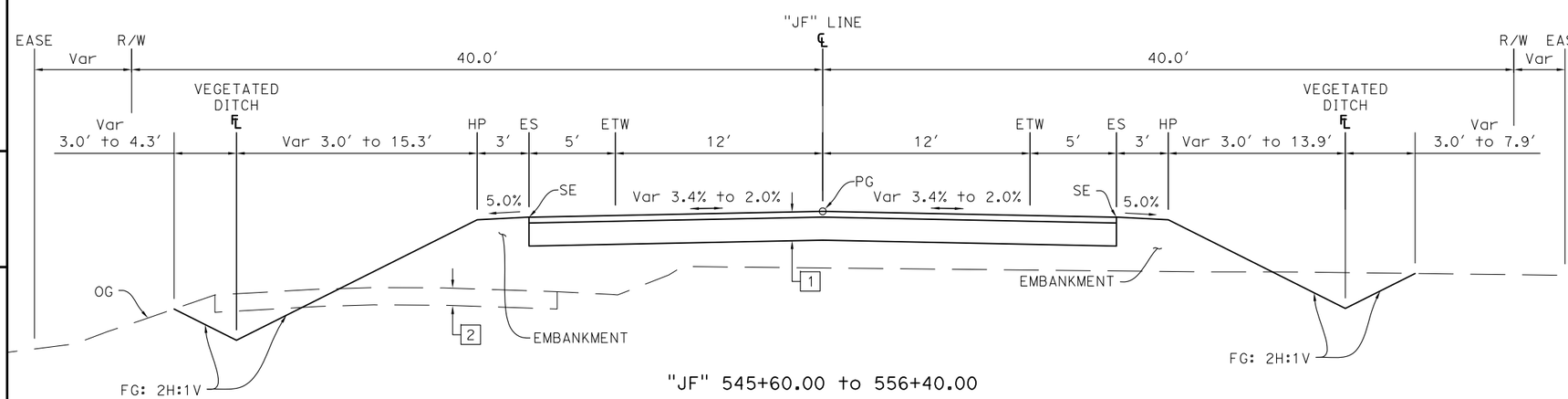

"JF" 545+60.00 to 556+40.00

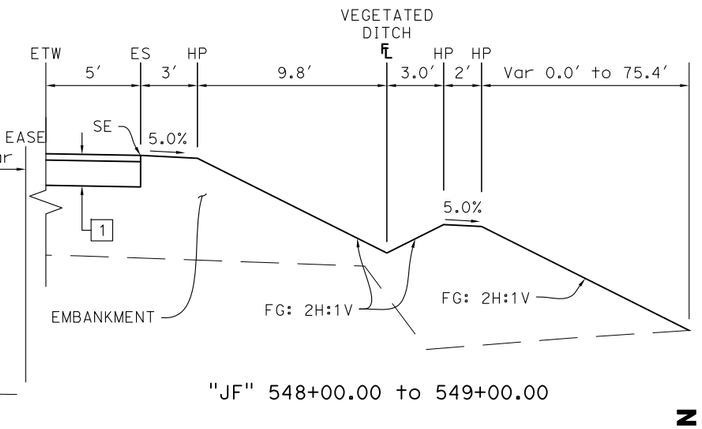

"JF" 548+00.00 to 549+00.00

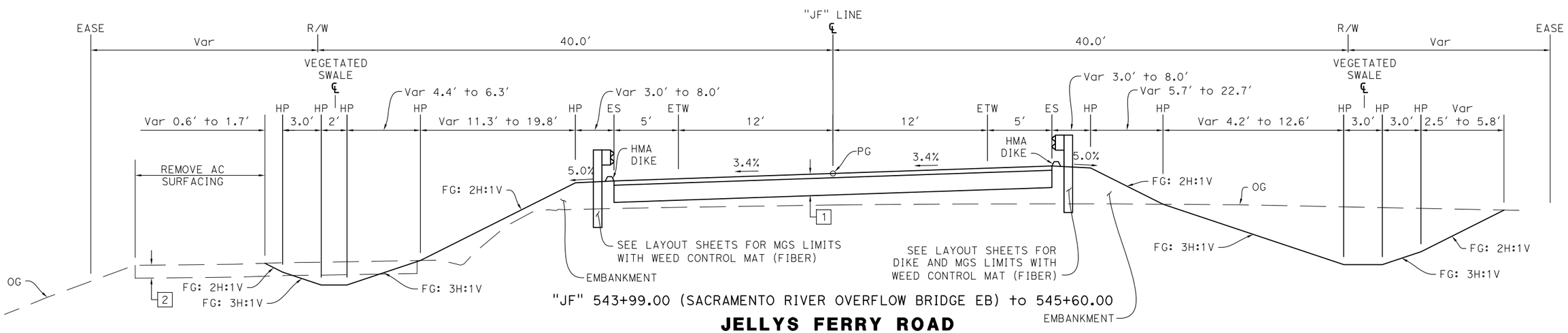

"JF" 543+99.00 (SACRAMENTO RIVER OVERFLOW BRIDGE EB) to 545+60.00

JELLYS FERRY ROAD

TYPICAL CROSS SECTIONS

NO SCALE

X-3

65% SUBMITTAL, NOT FOR CONSTRUCTION

RELATIVE BORDER SCALE IS IN INCHES 0 1 2 3

REVISED BY	DATE REVISED

CALCULATED-DESIGNED BY	CHECKED BY
K. BEWSEY/ D. ZURCHER	KEITH RHODES

PROJECT ENGINEER: MICHAEL WOLOHAN

TEHAMA COUNTY DEPARTMENT OF PUBLIC WORKS

JELLYS FERRY IMPROVEMENT PROJECT

XRef list: | 054-BRGR |
Mar. 19, 2015 - 20:16:27 DWG Name: P:\710054 - Jellys Ferry Bridge\500_Engineering\510_Civil\511_CADD\SHEETS\054-X.dwg Updated By: DZurcher

Dist.	COUNTY	ROUTE	POST MILE TOTAL PROJECT	SHEET No.	TOTAL SHEETS
2	TEH	JF		5	138

REGISTERED CIVIL ENGINEER DATE

PLANS APPROVAL DATE

REGISTERED PROFESSIONAL ENGINEER K. BEWSEY No. 71485 Exp. 12/31/15 CIVIL STATE OF CALIFORNIA

T.Y. LIN INTERNATIONAL OR ITS OFFICERS OR AGENTS SHALL NOT BE RESPONSIBLE FOR THE ACCURACY OR COMPLETENESS OF ELECTRONIC COPIES OF THIS PLAN SHEET.

T·Y·LIN INTERNATIONAL
1601 RESPONSE ROAD, SUITE 260
SACRAMENTO, CA 95815

NOTES:

1. SEE SHEET X-1 FOR NOTES AND LEGEND.

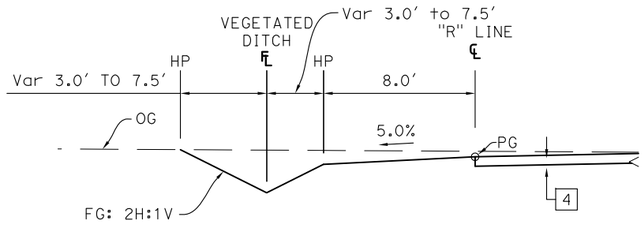

"R" 20+80.00 to 24+15.00

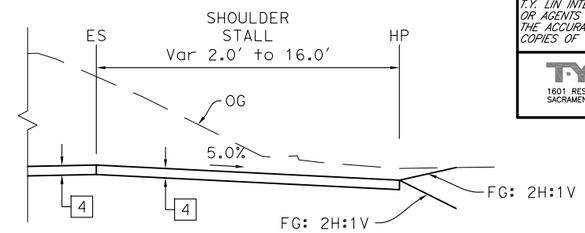

"R" 22+84.81 to 23+94.99
"R" 24+10.42 to 25+29.15
"R" 25+45.15 to 16+55.39

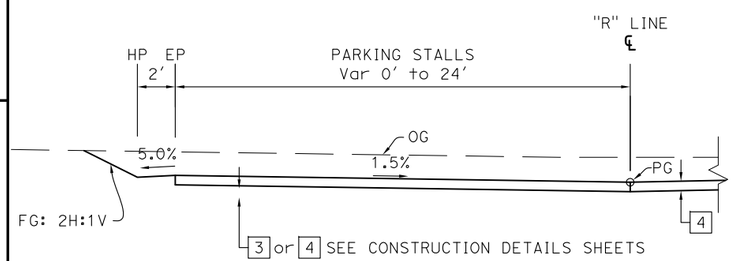

"R" 19+63.20 to 20+76.89

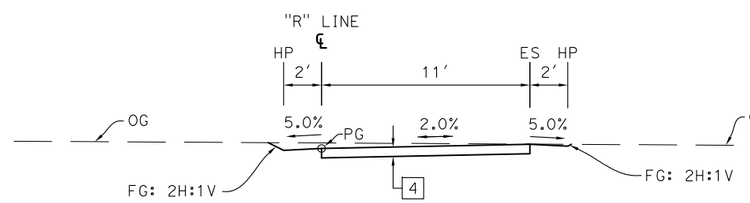

"R" 16+68.78 to 26+43.91

BLM CIRCULATION ROAD

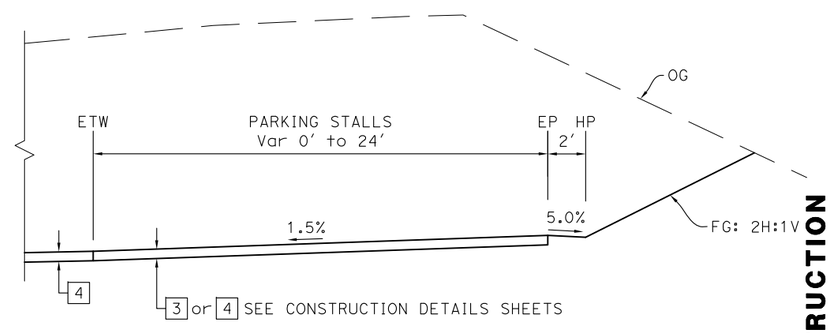

"R" 21+94.23 to 22+47.70

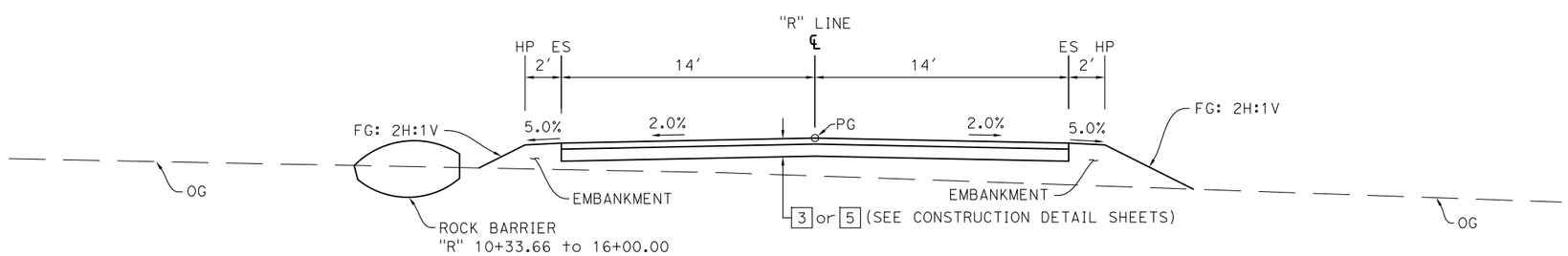

"R" 10+00.00 to 16+68.78

BLM ACCESS ROAD

TYPICAL CROSS SECTIONS

NO SCALE

X-4

65% SUBMITTAL, NOT FOR CONSTRUCTION

REVISED BY	DATE REVISED
K. BEWSEY/ D. ZURCHER	KEITH RHODES
CALCULATED-DESIGNED BY	CHECKED BY
PROJECT ENGINEER	MICHAEL WOLOHAN

TEHAMA COUNTY DEPARTMENT OF PUBLIC WORKS

JELLYS FERRY IMPROVEMENT PROJECT

RELATIVE BORDER SCALE IS IN INCHES 0 1 2 3

XRef List: | 054-BRDR |
Mar. 19, 2015 - 20:16:27 DWG Name: P:\710054 - Jellys Ferry Bridge\500_Engineering\510_Civil\511_CADD\SHEETS\054-X.dwg Updated By: DZurcher

Dist.	COUNTY	ROUTE	POST MILE TOTAL PROJECT	SHEET No.	TOTAL SHEETS
2	TEH	JF		6	138

REGISTERED CIVIL ENGINEER DATE

PLANS APPROVAL DATE

REGISTERED PROFESSIONAL ENGINEER
K. BEWSEY
No. 71485
Exp. 12/31/15
CIVIL
STATE OF CALIFORNIA

T.Y. LIN INTERNATIONAL OR ITS OFFICERS OR AGENTS SHALL NOT BE RESPONSIBLE FOR THE ACCURACY OR COMPLETENESS OF ELECTRONIC COPIES OF THIS PLAN SHEET.

T·Y·LIN INTERNATIONAL
1601 RESPONSE ROAD, SUITE 260
SACRAMENTO, CA 95815

NOTES:

1. SEE SHEET X-1 FOR NOTES AND LEGEND.

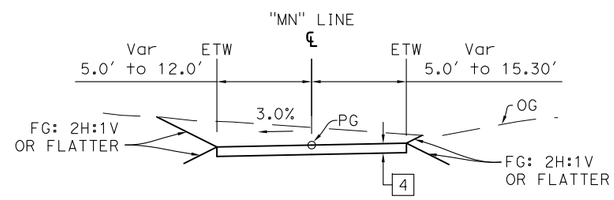

"MN" 30+00.00 to 38+74.73

MUDD NORTH ROAD

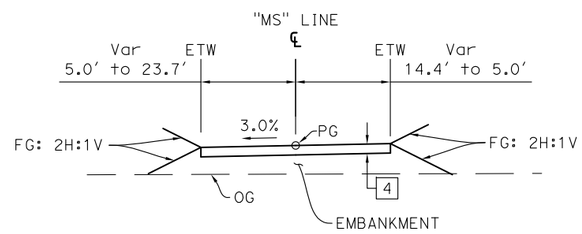

"MS" 20+61.14 to 24+69.94

MUDD SOUTH ROAD

TYPICAL CROSS SECTIONS

NO SCALE

X-5

65% SUBMITTAL, NOT FOR CONSTRUCTION

RELATIVE BORDER SCALE IS IN INCHES 0 1 2 3	
REVISED BY	
DATE REVISED	
CALCULATED-DESIGNED BY	K. BEWSEY/ D. ZURCHER
CHECKED BY	KEITH RHODES
PROJECT ENGINEER	MICHAEL WOLOHAN
TEHAMA COUNTY DEPARTMENT OF PUBLIC WORKS	
JELLYS FERRY IMPROVEMENT PROJECT	

XRef List: | 054-BRDR |
Mar. 19, 2015 – 20:16:27 DWG Name: P:\710054 – Jellys Ferry Bridge\500_Engineering\510_Civil\511_CADD\SHEETS\054-X.dwg Updated By: DZurcher

Dist.	COUNTY	ROUTE	POST MILE TOTAL PROJECT	SHEET No.	TOTAL SHEETS
2	TEH	JF		7	138

REGISTERED CIVIL ENGINEER DATE

PLANS APPROVAL DATE

REGISTERED PROFESSIONAL ENGINEER
K. BEWSEY
No. 71485
Exp. 12/31/15
CIVIL
STATE OF CALIFORNIA

T.Y. LIN INTERNATIONAL OR ITS OFFICERS OR AGENTS SHALL NOT BE RESPONSIBLE FOR THE ACCURACY OR COMPLETENESS OF ELECTRONIC COPIES OF THIS PLAN SHEET.

T·Y·LIN INTERNATIONAL
1601 RESPONSE ROAD, SUITE 260
SACRAMENTO, CA 95815

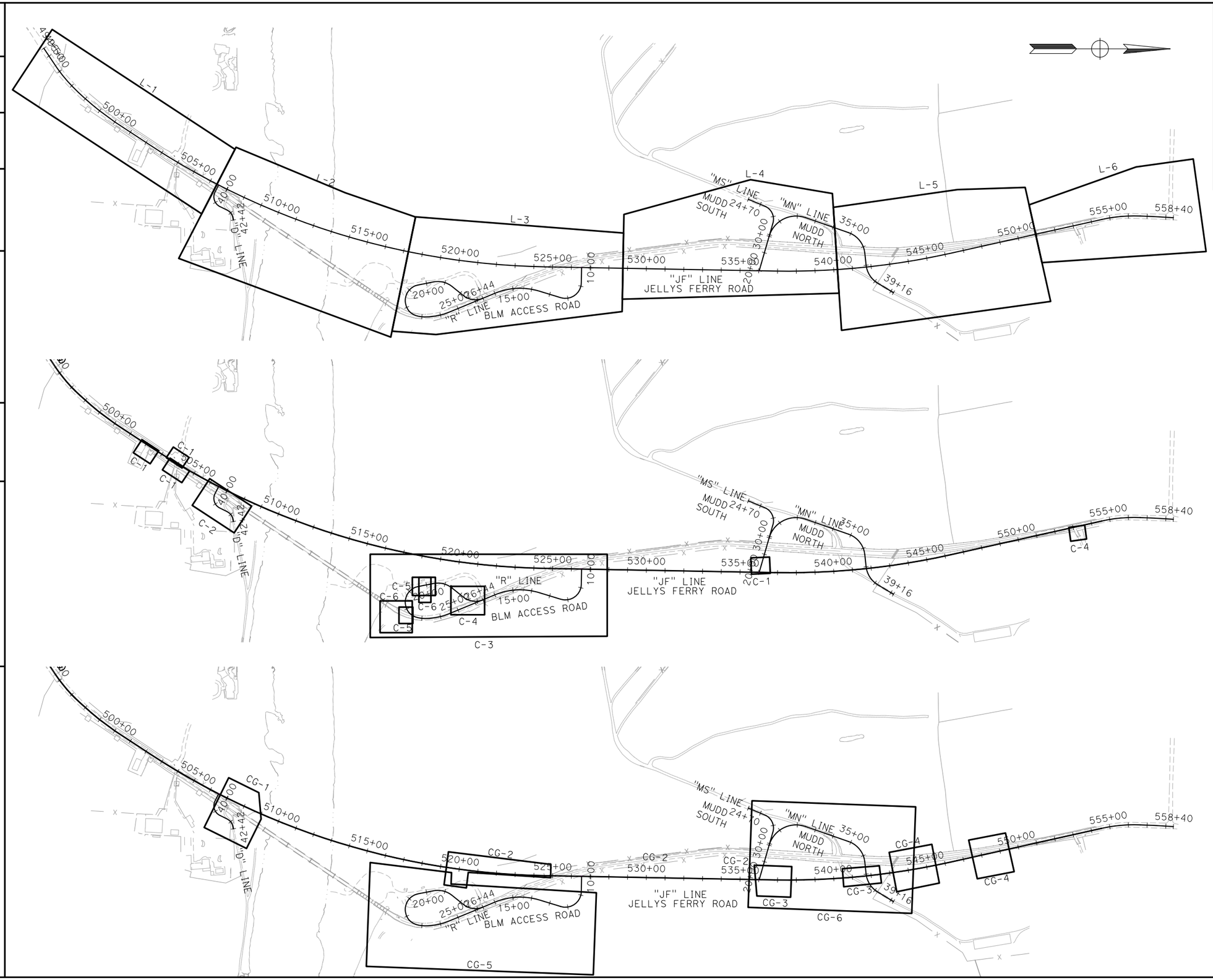

NOTES:

1. ALL DIMENSIONS ARE IN FEET UNLESS OTHERWISE SHOWN.
2. FOR COMPLETE RIGHT OF WAY, SEE RIGHT OF WAY RECORD MAPS AT TEHAMA COUNTY.

KEY MAP AND LINE INDEX

SCALE 1"=250'

K-1

65% SUBMITTAL, NOT FOR CONSTRUCTION

RELATIVE BORDER SCALE IS IN INCHES 0 1 2 3

REVISED BY	DATE REVISED

CALCULATED-DESIGNED BY	CHECKED BY
K. BEWSEY/ D. ZURCHER	KEITH RHODES

PROJECT ENGINEER: MICHAEL WOLOHAN

TEHAMA COUNTY DEPARTMENT OF PUBLIC WORKS

JELLYS FERRY IMPROVEMENT PROJECT

XRef List: | 054-BRDR | 054-X-TP |
Mar. 19, 2015 - 21:25:25 DWG Name: P:\710054 - Jellys Ferry Bridge\500_Engineering\510_Civil\511_CADD\SHEETS\054-K.dwg Updated By: DZurcher

Dist.	COUNTY	ROUTE	POST MILE TOTAL PROJECT	SHEET No.	TOTAL SHEETS
2	TEH	JF		8	138

REGISTERED CIVIL ENGINEER DATE

PLANS APPROVAL DATE

REGISTERED PROFESSIONAL ENGINEER
K. BEWSEY
No. 71485
Exp. 12/31/15
CIVIL
STATE OF CALIFORNIA

T.Y. LIN INTERNATIONAL OR ITS OFFICERS OR AGENTS SHALL NOT BE RESPONSIBLE FOR THE ACCURACY OR COMPLETENESS OF ELECTRONIC COPIES OF THIS PLAN SHEET.

T·Y·LIN INTERNATIONAL
1601 RESPONSE ROAD, SUITE 260
SACRAMENTO, CA 95815

NOTES:

1. ALL DIMENSIONS ARE IN FEET UNLESS OTHERWISE SHOWN.
2. FOR COMPLETE RIGHT OF WAY, SEE RIGHT OF WAY RECORD MAPS AT TEHAMA COUNTY.

KEY MAP AND LINE INDEX

SCALE 1"=250'

K-2

65% SUBMITTAL, NOT FOR CONSTRUCTION

REVISED BY	K. BEWSEY/ D. ZURCHER
DATE REVISED	
CALCULATED-DESIGNED BY	K. BEWSEY/ D. ZURCHER
CHECKED BY	KEITH RHODES
PROJECT ENGINEER	MICHAEL WOLOHAN

RELATIVE BORDER SCALE IS IN INCHES 0 1 2 3

TEHAMA COUNTY DEPARTMENT OF PUBLIC WORKS

JELLYS FERRY IMPROVEMENT PROJECT

XRef list: | 054-BRDR | 054-X-TP |
Mar. 19, 2015 - 21:25:25 DWG Name: P:\710054 - Jellys Ferry Bridge\500_Engineering\510_Civil\511_CADD\SHEETS\054-K.dwg Updated By: DZurcher

Dist.	COUNTY	ROUTE	POST MILE TOTAL PROJECT	SHEET No.	TOTAL SHEETS
2	TEH	JF		9	138

REGISTERED LAND SURVEYOR DATE

PLANS APPROVAL DATE

LICENSED LAND SURVEYOR XXXXXXXXX No. XXXXX STATE OF CALIFORNIA

T.Y. LIN INTERNATIONAL OR ITS OFFICERS OR AGENTS SHALL NOT BE RESPONSIBLE FOR THE ACCURACY OR COMPLETENESS OF ELECTRONIC COPIES OF THIS PLAN SHEET.

T·Y·LIN INTERNATIONAL
3301 C STREET, BUILDING 100-M
SACRAMENTO, CA 95816

NOTES:

1. ALL DIMENSIONS ARE IN FEET UNLESS OTHERWISE SHOWN.
2. ANY EXISTING MONUMENT SHALL BE RESET OR RELOCATED AND A RECORD OF SURVEY FILED IF DISTURBED.

LEGEND

△ CONTROL POINT

∘ POINT OF CURVE

DATUM

HORIZONTAL: CALIFORNIA COORDINATE SYSTEM, ZONE 1, NORTH AMERICAN DATUM OF 1983 (NAD83), US SURVEY FEET, EPOCH 2007.00

VERTICAL: NORTH AMERICAN VERTICAL DATUM OF 1988 (NAVD88)

HORIZONTAL CONTROL STATEMENT

THE HORIZONTAL PROJECT DATUM IS BASED UPON GPS TIES TO NATIONAL GEODETIC SURVEY (NGS) PERMANENT IDENTIFIERS (PID) AE9298, AE9985, AND DH6582.

VERTICAL CONTROL STATEMENT

THE VERTICAL PROJECT DATUM IS BASED ON TIES TO NATIONAL GEODETIC SURVEY (NGS) PERMANENT IDENTIFIERS (PID) AE9985, LU2264, LU2267, LU0392, AND LU0393.

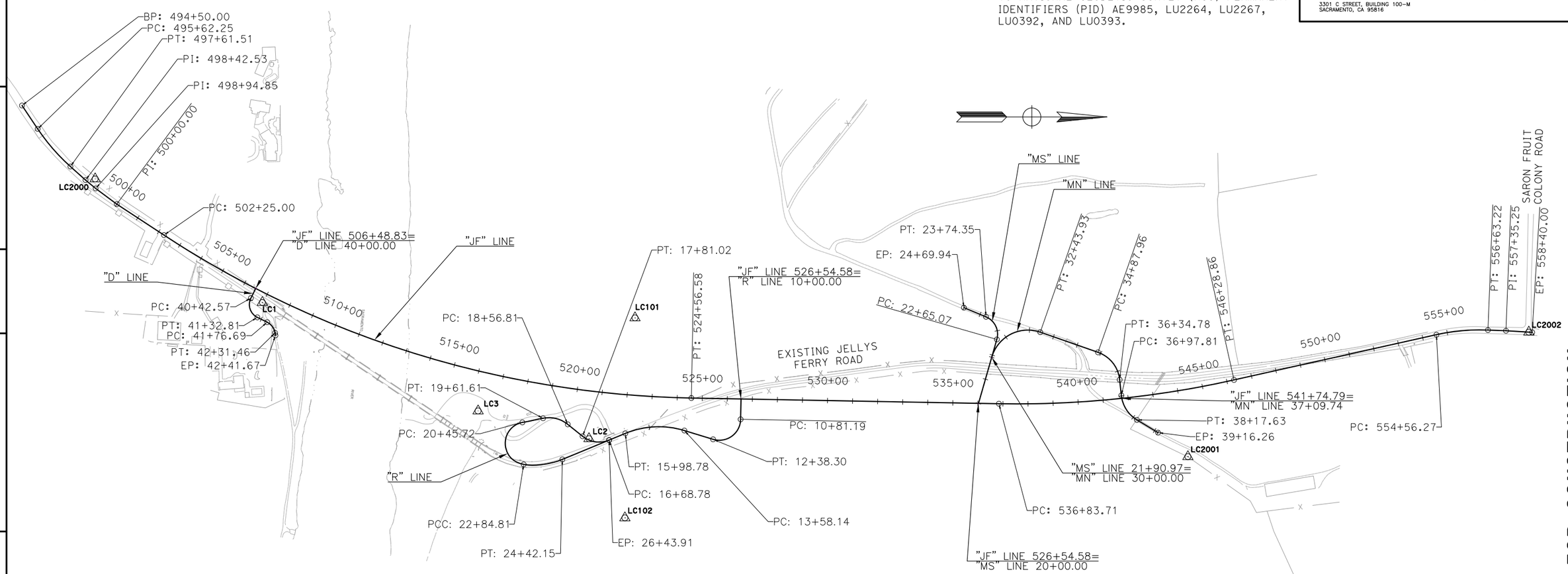

LOCAL CONTROL						
No.	STATION	OFFSET	NORTHING	EASTING	ELEVATION	DESCRIPTION
LC1	"JF" 506+97.30	37.63′ R†	1998485.28	6508527.81	361.05	FD MAG NAIL W/PSOMAS WASHER FLUSH W/AC, 0.7FT W. OF EP, +/- 100FT S OF BRIDGE
LC2	"JF" 520+68.91	189.29′ R†	1999788.40	6509070.81	343.05	FD REBAR W/PSOMAS CONTROL CAP FLUSH IN GROUND AT W. SIDE OF BARRICADE @ NORTH ENTRANCE
LC3	"JF" 516+32.70	155.53′ R†	1999345.85	6508960.19	332.54	FD REBAR W/PSOMAS CONTROL CAP FLUSH IN GROUND IN BOAT LAUNCH AREA
LC101	"JF" 522+06.17	308.06′ L†	1999971.97	6508589.29	330.19	FD REBAR W/PSOMAS CONTROL CAP FLUSH IN GROUND
LC102	"JF" 522+28.17	489.85′ R†	1999931.68	6509386.50	341.15	FD REBAR W/PSOMAS CONTROL CAP FLUSH IN GROUND IN FIELD EAST OF ROAD N. SIDE OF RIVER
LC2000	"JF" 498+68.70	27.80′ L†	1997818.18	6508035.26	360.00	SET 60D NAIL ON W. SIDE OF ROAD
LC2001	"JF" 543+97.89	265.50′ R†	2002177.97	6509142.44	356.44	2-1/2" BRASS CAP EAST OF PRIVATE DRIVEWAY ALONG FENCE
LC2002	"JF" 558+26.69	1.97′ R†	2003538.35	6508646.06	358.61	1-1/2" ALUMINUM CAP NEAR INTERSECTION OF JELLYS FERRY ROAD AND SARON FRUIT COLONY ROAD

PROJECT CONTROL AND MONUMENTATION

1" = 200′

PC-1

THIS PLAN ACCURATE FOR PROJECT CONTROL INFORMATION ONLY.

65% SUBMITTAL, NOT FOR CONSTRUCTION

REVISED BY	DATE REVISED

CALCULATED- K. BEWSEY/ D. ZURCHER
DESIGNED BY KEITH RHODES
CHECKED BY

PROJECT ENGINEER MICHAEL WOLOHAN

TEHAMA COUNTY DEPARTMENT OF PUBLIC WORKS
JELLYS FERRY IMPROVEMENT PROJECT

RELATIVE BORDER SCALE IN INCHES 0 1 2 3

Updated By: DZurcher

DWG Name: \\SSACFIL001\Prj_File\710054 - Jellys Ferry Bridge\500_Engineering\510_Civil\511_CADD\SHEETS\054-PC.dwg

XRef List: | 054-BRDR-PC |
May. 23, 2014 - 17:06:38

Dist.	COUNTY	ROUTE	POST MILE TOTAL PROJECT	SHEET No.	TOTAL SHEETS
2	TEH	JF		10	138

REGISTERED CIVIL ENGINEER DATE

PLANS APPROVAL DATE

REGISTERED PROFESSIONAL ENGINEER K. BEWSEY No. 71485 Exp. 12/31/15 CIVIL STATE OF CALIFORNIA

T.Y. LIN INTERNATIONAL OR ITS OFFICERS OR AGENTS SHALL NOT BE RESPONSIBLE FOR THE ACCURACY OR COMPLETENESS OF ELECTRONIC COPIES OF THIS PLAN SHEET.

T·Y·LIN INTERNATIONAL
1601 RESPONSE ROAD, SUITE 260
SACRAMENTO, CA 95815

NOTES:

1. ALL DIMENSIONS ARE IN FEET UNLESS OTHERWISE SHOWN.
2. FOR COMPLETE RIGHT OF WAY, SEE RIGHT OF WAY RECORD MAPS AT TEHAMA COUNTY.
3. ALL STATIONING IS ALONG THE "JF" LINE UNLESS OTHERWISE SPECIFIED.

ABBREVIATIONS:

BW(3-4)	TYPE BW, 3-4 WIRE
BW(5-7)	TYPE BW, 5-7 WIRE
BW(3MP)	TYPE BW, 3-STRAND, METAL POST
BW(4MP)	TYPE BW, 4-STRAND, METAL POST
BW(5MP)	TYPE BW, 5-STRAND, METAL POST
BW(7MP)	TYPE BW, 7-STRAND, METAL POST
BW(5WP)	TYPE BW, 5-STRAND, WOOD POST
WOOD(3R)	TYPE WOOD, 3-RAIL, WOOD POST
WOOD(4R)	TYPE WOOD, 4-RAIL, WOOD POST
B	BASE WIDTH
CP	CONTROL POINT
RPO	ROCK PIPE OUTFALL

LEGEND

- CONTROL POINT
- DRAINAGE SYSTEM
- DRAINAGE COMPONENT
- LINE NUMBER, SEE LINE TABLE
- CURVE NUMBER, SEE CURVE TABLE
- STRUCTURAL SECTION, SEE SHEET X-1
- COLD PLANE AC PAVEMENT
- REMOVE AC SURFACING
- HINGE
- FILL
- CUT
- ROCK BARRIER
- RIGHT OF WAY
- TEMPORARY CONSTRUCTION EASEMENT
- METAL BEAM GUARD RAIL
- Exist WIRE FENCE
- Exist WOOD FENCE
- Exist FLOWLINE
- Exist UNDERGROUND ELECTRIC
- Exist OVERHEAD ELECTRIC
- Exist UNDERGROUND TELEPHONE
- Exist OVERHEAD TELEPHONE
- Exist OVERHEAD CABLE
- Exist GUY WIRE
- Exist JOINT, POWER, OR TELEPHONE POLE
- REMOVE SIGN AND SALVAGE TO PROPERTY OWNER
- CALTRANS DETAIL NUMBER
- BEGIN OR END CURVE
- ANGLE POINT
- BEGIN / END DELINEATION
- INSTALL ROADSIDE SIGN
- REMOVE ROADSIDE SIGN, AS NOTED
- EXISTING SIGN TO PROTECT IN PLACE
- RELOCATE/RESET SIGN FROM TO

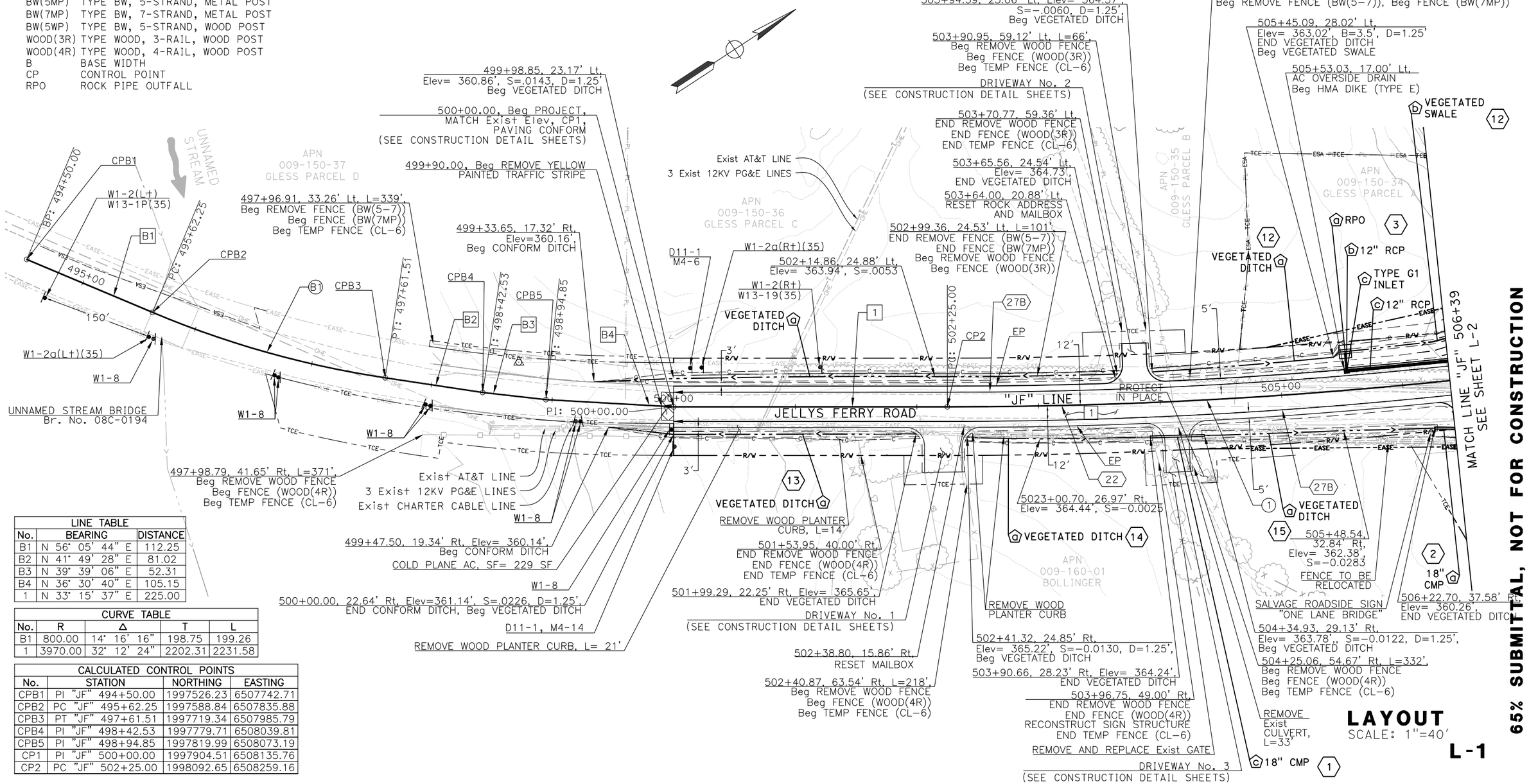

LINE TABLE		
No.	BEARING	DISTANCE
B1	N 56° 05' 44" E	112.25
B2	N 41° 49' 28" E	81.02
B3	N 39° 39' 06" E	52.31
B4	N 36° 30' 40" E	105.15
1	N 33° 15' 37" E	225.00

CURVE TABLE				
No.	R	Δ	T	L
B1	800.00	14° 16' 16"	198.75	199.26
1	3970.00	32° 12' 24"	2202.31	2231.58

CALCULATED CONTROL POINTS			
No.	STATION	NORTHING	EASTING
CPB1	PI "JF" 494+50.00	1997526.23	6507742.71
CPB2	PC "JF" 495+62.25	1997588.84	6507835.88
CPB3	PT "JF" 497+61.51	1997719.34	6507985.79
CPB4	PI "JF" 498+42.53	1997779.71	6508039.81
CPB5	PI "JF" 498+94.85	1997819.99	6508073.19
CP1	PI "JF" 500+00.00	1997904.51	6508135.76
CP2	PC "JF" 502+25.00	1998092.65	6508259.16

LAYOUT
SCALE: 1"=40'

L-1

65% SUBMITTAL, NOT FOR CONSTRUCTION

REVISED BY	DATE REVISED

RELATIVE BORDER SCALE IS IN INCHES 0 1 2 3

CALCULATED- K. BEWSEY/ D. ZURCHER
DESIGNED BY
CHECKED BY KEITH RHODES

PROJECT ENGINEER MICHAEL WOLOHAN

TEHAMA COUNTY DEPARTMENT OF PUBLIC WORKS
JELLYS FERRY IMPROVEMENT PROJECT

XRef list: | 054-BRGR | 054-C-RD | 054-X-TP | 054-X-UTIL | 054-X-LANDNET | 054-Drainage | 054-Proposed ROW | 054-Corridor | 054-Overflow Bridge Foundation |
Mar. 20, 2015 - 00:06:46 DWG Name: P:\710054 - Jellys Ferry Bridge\500_Engineering\510_Civil\511_CADD\SHEETS\054-L.dwg Updated By: DZurcher

Dist.	COUNTY	ROUTE	POST MILE TOTAL PROJECT	SHEET No.	TOTAL SHEETS
2	TEH	JF		11	138

REGISTERED CIVIL ENGINEER DATE

PLANS APPROVAL DATE

REGISTERED PROFESSIONAL ENGINEER K. BEWSEY No. 71485 Exp. 12/31/15 CIVIL STATE OF CALIFORNIA

T.Y. LIN INTERNATIONAL OR ITS OFFICERS OR AGENTS SHALL NOT BE RESPONSIBLE FOR THE ACCURACY OR COMPLETENESS OF ELECTRONIC COPIES OF THIS PLAN SHEET.

T·Y·LIN INTERNATIONAL
1601 RESPONSE ROAD, SUITE 260
SACRAMENTO, CA 95815

NOTES:

1. SEE SHEET L-1 FOR NOTES AND LEGEND.

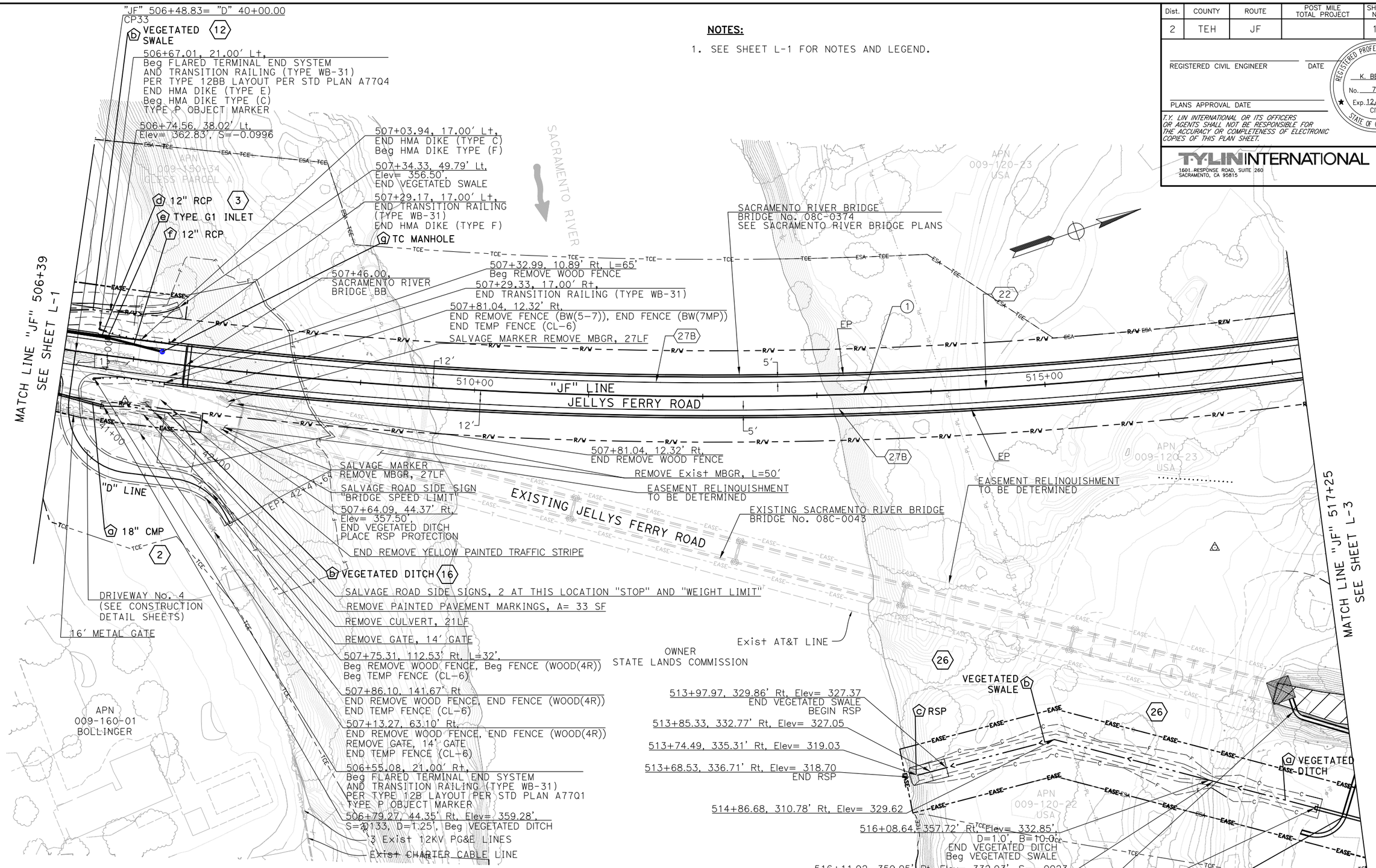

CURVE TABLE				
No.	R	Δ	T	L
1	3970.00	32° 12' 24"	1146.13	2231.58

CALCULATED CONTROL POINTS			
No.	STATION	NORTHING	EASTING
CP33	BP "D" 40+00.00	1998458.77	6508472.27

LAYOUT
SCALE: 1"=40'

L-2

65% SUBMITTAL, NOT FOR CONSTRUCTION

TEHAMA COUNTY DEPARTMENT OF PUBLIC WORKS
JELLYS FERRY IMPROVEMENT PROJECT

PROJECT ENGINEER MICHAEL WOLOHAN

CALCULATED-DESIGNED BY K. BEWSEY/ D. ZURCHER
CHECKED BY KEITH RHODES

REVISED BY
DATE REVISED

RELATIVE BORDER SCALE IS IN INCHES 0 1 2 3

XRef List: | 054-BRDR | 054-C-RD | 054-X-TP | 054-X-UTIL | 054-X-LANDNET | 054-Drainage | 054-Proposed ROW | 054-Corridor | 054-Overflow Bridge Foundation |
Mar. 20, 2015 - 00:06:46 DWG Name: P:\710054 - Jellys Ferry Bridge\500_Engineering\510_Civil\511_CADD\SHEETS\054-L.dwg Updated By: DZurcher

Dist.	COUNTY	ROUTE	POST MILE TOTAL PROJECT	SHEET No.	TOTAL SHEETS
2	TEH	JF		12	138

REGISTERED CIVIL ENGINEER DATE

PLANS APPROVAL DATE

REGISTERED PROFESSIONAL ENGINEER K. BEWSEY No. 71485 Exp. 12/31/15 CIVIL STATE OF CALIFORNIA

T.Y. LIN INTERNATIONAL OR ITS OFFICERS OR AGENTS SHALL NOT BE RESPONSIBLE FOR THE ACCURACY OR COMPLETENESS OF ELECTRONIC COPIES OF THIS PLAN SHEET.

T·Y·LIN INTERNATIONAL
1601 RESPONSE ROAD, SUITE 260
SACRAMENTO, CA 95815

NOTES:

1. SEE SHEET L-1 FOR NOTES AND LEGEND.
2. SEE SHEET C-3 FOR BLM IMPROVEMENTS.

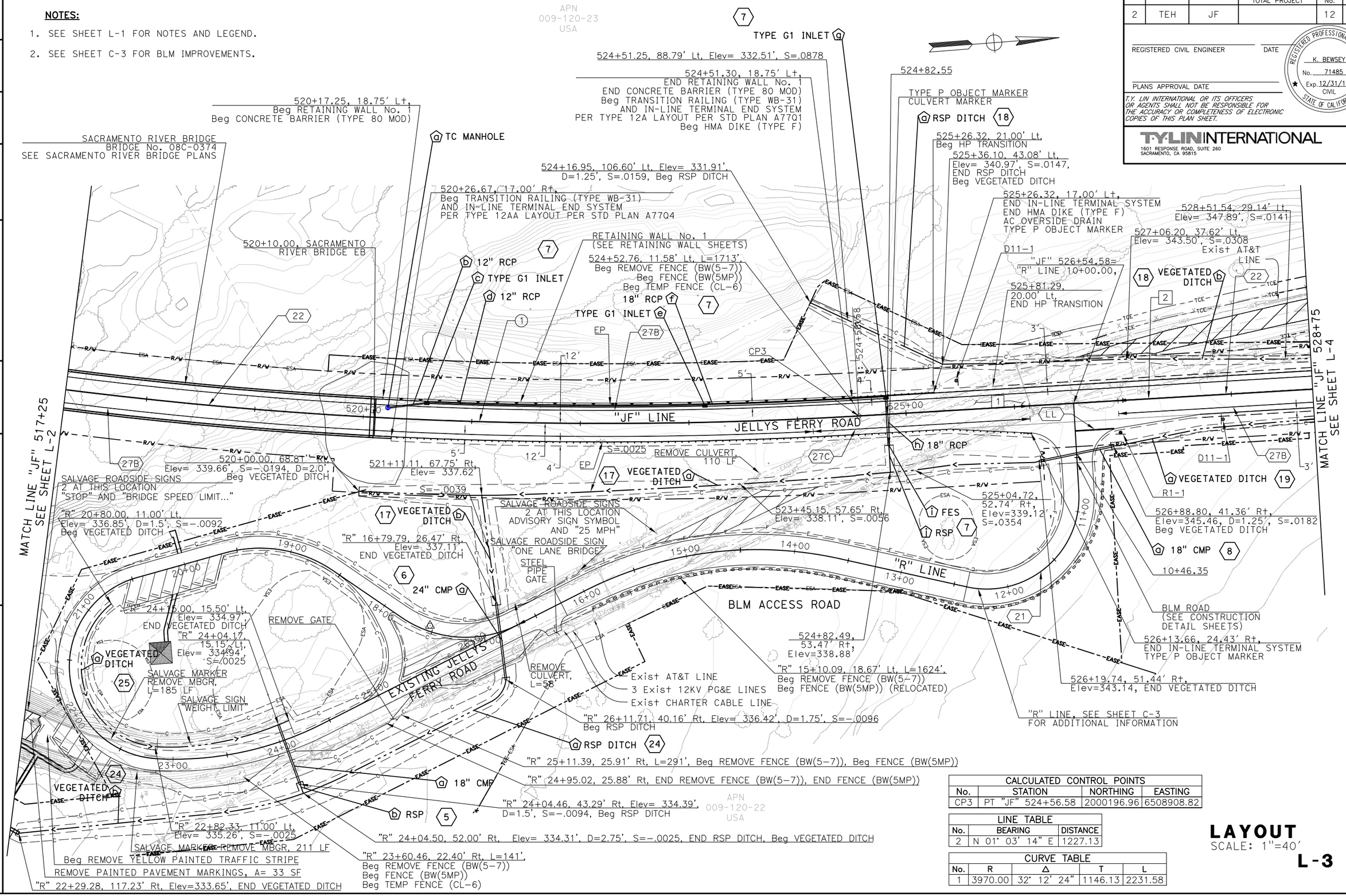

CALCULATED CONTROL POINTS			
No.	STATION	NORTHING	EASTING
CP3	PT "JF" 524+56.58	2000196.96	6508908.82

LINE TABLE		
No.	BEARING	DISTANCE
2	N 01° 03' 14" E	1227.13

CURVE TABLE				
No.	R	Δ	T	L
1	3970.00	32° 12' 24"	1146.13	2231.58

LAYOUT
SCALE: 1"=40'

L-3

65% SUBMITTAL, NOT FOR CONSTRUCTION

RELATIVE BORDER SCALE IS IN INCHES 0 1 2 3

REVISED BY	DATE REVISED

CALCULATED-DESIGNED BY	CHECKED BY
K. BEWSEY/ D. ZURCHER	KEITH RHODES

PROJECT ENGINEER: MICHAEL WOLOHAN

TEHAMA COUNTY DEPARTMENT OF PUBLIC WORKS

JELLYS FERRY IMPROVEMENT PROJECT

XRef List: | 054-BRGR | 054-C-RD | 054-X-TP | 054-X-UTIL | 054-X-LANDNET | 054-Drainage | 054-Proposed ROW | 054-Corridor | 054-Overflow Bridge Foundation | Mar. 20, 2015 - 00:06:46 DWG Name: P:\710054 - Jellys Ferry Bridge\500_Engineering\510_Civil\511_CADD\SHEETS\054-L.dwg Updated By: DZurcher

Dist.	COUNTY	ROUTE	POST MILE TOTAL PROJECT	SHEET No.	TOTAL SHEETS
2	TEH	JF		13	138

REGISTERED CIVIL ENGINEER DATE

PLANS APPROVAL DATE

REGISTERED PROFESSIONAL ENGINEER K. BEWSEY No. 71485 Exp. 12/31/15 CIVIL STATE OF CALIFORNIA

T.Y. LIN INTERNATIONAL OR ITS OFFICERS OR AGENTS SHALL NOT BE RESPONSIBLE FOR THE ACCURACY OR COMPLETENESS OF ELECTRONIC COPIES OF THIS PLAN SHEET.

T·Y·LIN INTERNATIONAL
1601 RESPONSE ROAD, SUITE 260
SACRAMENTO, CA 95815

CALCULATED CONTROL POINTS			
No.	STATION	NORTHING	EASTING
CP4	PC "JF" 536+83.71	2001423.88	6508931.39
CP9	BP "JF" 536+02.31	2001342.49	6508929.89
CP10	PC "MS" 22+65.07	2001415.80	6508675.16
CP11	PT "MS" 23+74.35	2001372.51	6508585.16
CP12	EP "MS" 24+69.94	2001284.24	6508548.47
CP13	BP "MN" 30+00.00	2001395.30	6508746.37
CP14	PT "MN" 32+43.93	2001588.85	6508646.22

LINE TABLE		
No.	BEARING	DISTANCE
2	N 01° 03' 14" E	1227.13
4	N 22° 34' 25" E	95.59
5	S 73° 56' 46" E	265.07
6	S 19° 13' 40" W	244.03

CURVE TABLE				
No.	R	Δ	T	L
2	3970.00	13° 38' 27"	474.82	945.16
4	75.00	83° 28' 48"	66.92	109.28
5	150.00	93° 10' 24"	158.55	243.93

NOTES:

1. SEE SHEET L-1 FOR NOTES AND LEGEND.

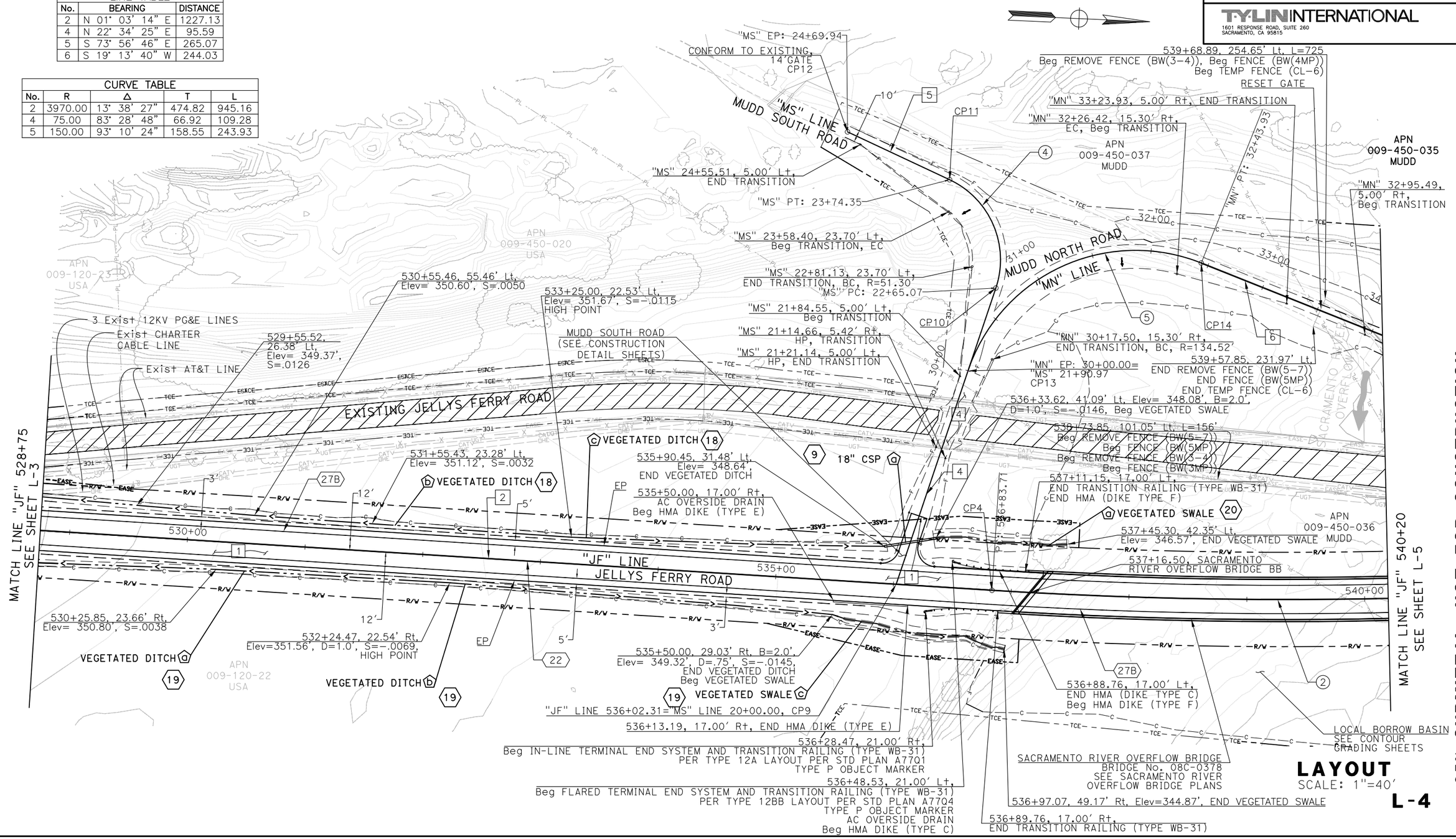

LAYOUT
SCALE: 1"=40'

L-4

65% SUBMITTAL, NOT FOR CONSTRUCTION

REVISED BY	DATE REVISED		
K. BEWSEY/ D. ZURCHER	KEITH RHODES		
CALCULATED-DESIGNED BY	CHECKED BY		
PROJECT ENGINEER	MICHAEL WOLOHAN		
TEHAMA COUNTY DEPARTMENT OF PUBLIC WORKS			
JELLYS FERRY IMPROVEMENT PROJECT			

RELATIVE BORDER SCALE IS IN INCHES 0 1 2 3

XRef List: | 054-BRDR | 054-C-RD | 054-X-TP | 054-X-UTIL | 054-X-LANDNET | 054-Drainage | 054-Proposed ROW | 054-Corridor | 054-Overflow Bridge Foundation |
Mar. 20, 2015 - 00:06:46 DWG Name: P:\710054 - Jellys Ferry Bridge\500_Engineering\510_Civil\511_CADD\SHEETS\054-L.dwg Updated By: DZurcher

Dist.	COUNTY	ROUTE	POST MILE TOTAL PROJECT	SHEET No.	TOTAL SHEETS
2	TEH	JF		14	138

REGISTERED CIVIL ENGINEER DATE

PLANS APPROVAL DATE

REGISTERED PROFESSIONAL ENGINEER K. BEWSEY No. 71485 Exp. 12/31/15 CIVIL STATE OF CALIFORNIA

T.Y. LIN INTERNATIONAL OR ITS OFFICERS OR AGENTS SHALL NOT BE RESPONSIBLE FOR THE ACCURACY OR COMPLETENESS OF ELECTRONIC COPIES OF THIS PLAN SHEET.

T·Y·LIN INTERNATIONAL
1601 RESPONSE ROAD, SUITE 260
SACRAMENTO, CA 95815

NOTES:

1. SEE SHEET L-1 FOR NOTES AND LEGEND.

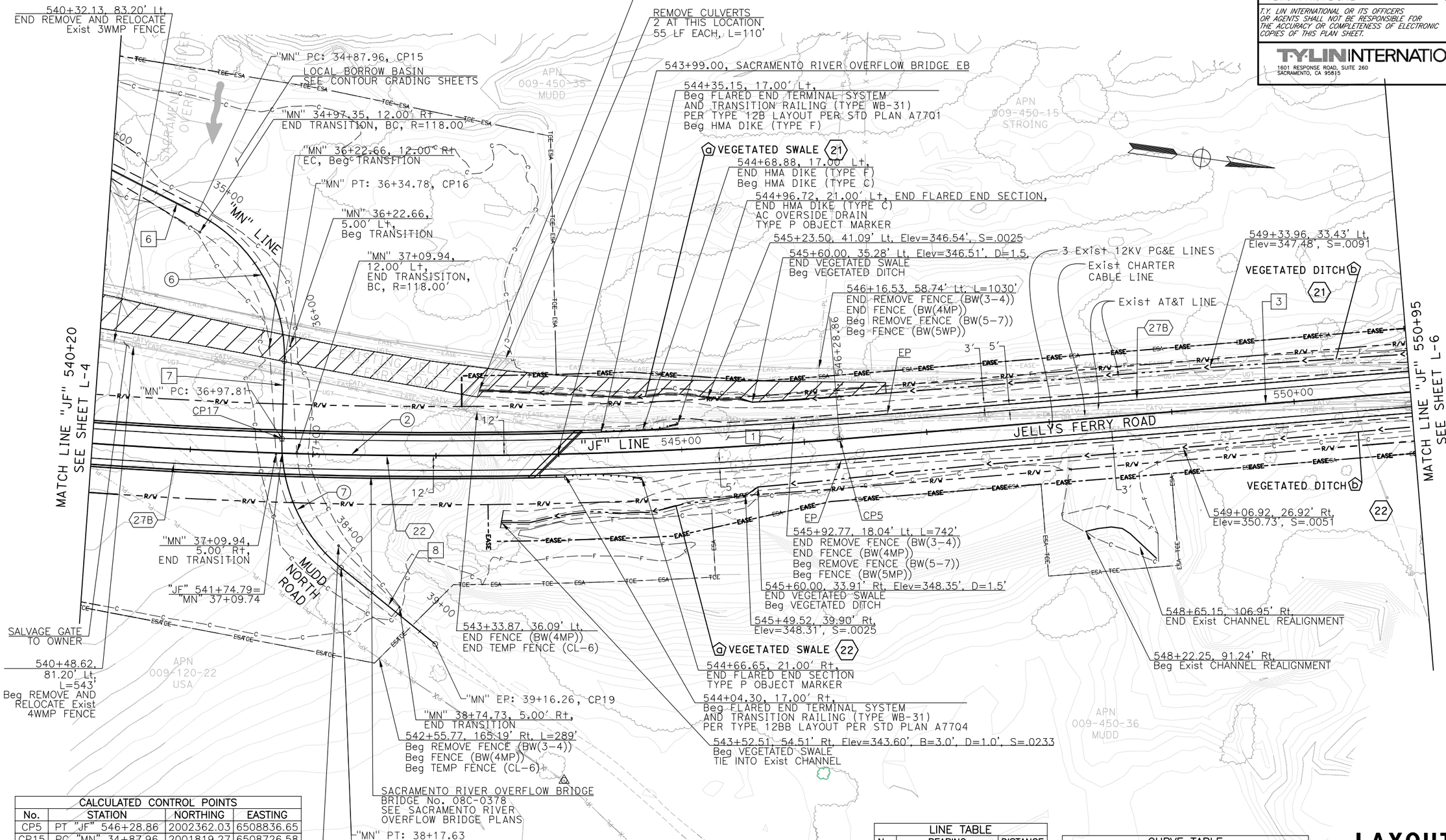

CALCULATED CONTROL POINTS			
No.	STATION	NORTHING	EASTING
CP5	PT "JF" 546+28.86	2002362.03	6508836.65
CP15	PC "MN" 34+87.96	2001819.27	6508726.58
CP16	PT "MN" 36+34.78	2001905.73	6508835.60
CP17	PC "MN" 36+97.81	2001912.39	6508898.28
CP18	PT "MN" 38+17.63	2001974.46	6508995.84
CP19	EP "MN" 39+16.26	2002058.88	6509046.82

LINE TABLE		
No.	BEARING	DISTANCE
3	N 12° 35' 13" W	827.41
6	N 19° 13' 40" E	244.03
7	N 83° 56' 17" E	63.03
8	N 31° 07' 43" E	98.62

CURVE TABLE				
No.	R	Δ	T	L
2	3970.00	13° 38' 27"	474.82	945.16
6	130.00	64° 42' 38"	82.36	146.82
7	130.00	52° 48' 35"	64.55	119.82

LAYOUT
SCALE: 1"=40'

L-5

65% SUBMITTAL, NOT FOR CONSTRUCTION

TEHAMA COUNTY DEPARTMENT OF PUBLIC WORKS
JELLYS FERRY IMPROVEMENT PROJECT

PROJECT ENGINEER MICHAEL WOLOHAN

CALCULATED-DESIGNED BY K. BEWSEY/ D. ZURCHER
CHECKED BY KEITH RHODES

REVISED BY
DATE REVISED

RELATIVE BORDER SCALE IS IN INCHES 0 1 2 3

XRef List: | 054-BRDR | 054-C-RD | 054-X-TP | 054-X-UTL | 054-X-LANDNET | 054-Drainage | 054-Proposed ROW | 054-Corridor | 054-Overflow Bridge Foundation |
Mar. 20, 2015 - 00:06:46 DWG Name: P:\710054 - Jellys Ferry Bridge\500_Engineering\510_Civil\511_CADD\SHEETS\054-L.dwg Updated By: DZurcher

Dist.	COUNTY	ROUTE	POST MILE TOTAL PROJECT	SHEET No.	TOTAL SHEETS
2	TEH	JF		15	138

REGISTERED CIVIL ENGINEER DATE

PLANS APPROVAL DATE

REGISTERED PROFESSIONAL ENGINEER K. BEWSEY No. 71485 Exp. 12/31/15 CIVIL STATE OF CALIFORNIA

T.Y. LIN INTERNATIONAL OR ITS OFFICERS OR AGENTS SHALL NOT BE RESPONSIBLE FOR THE ACCURACY OR COMPLETENESS OF ELECTRONIC COPIES OF THIS PLAN SHEET.

T·Y·LIN INTERNATIONAL
1601 RESPONSE ROAD, SUITE 260
SACRAMENTO, CA 95815

NOTES:

1. SEE SHEET L-1 FOR NOTES AND LEGEND.

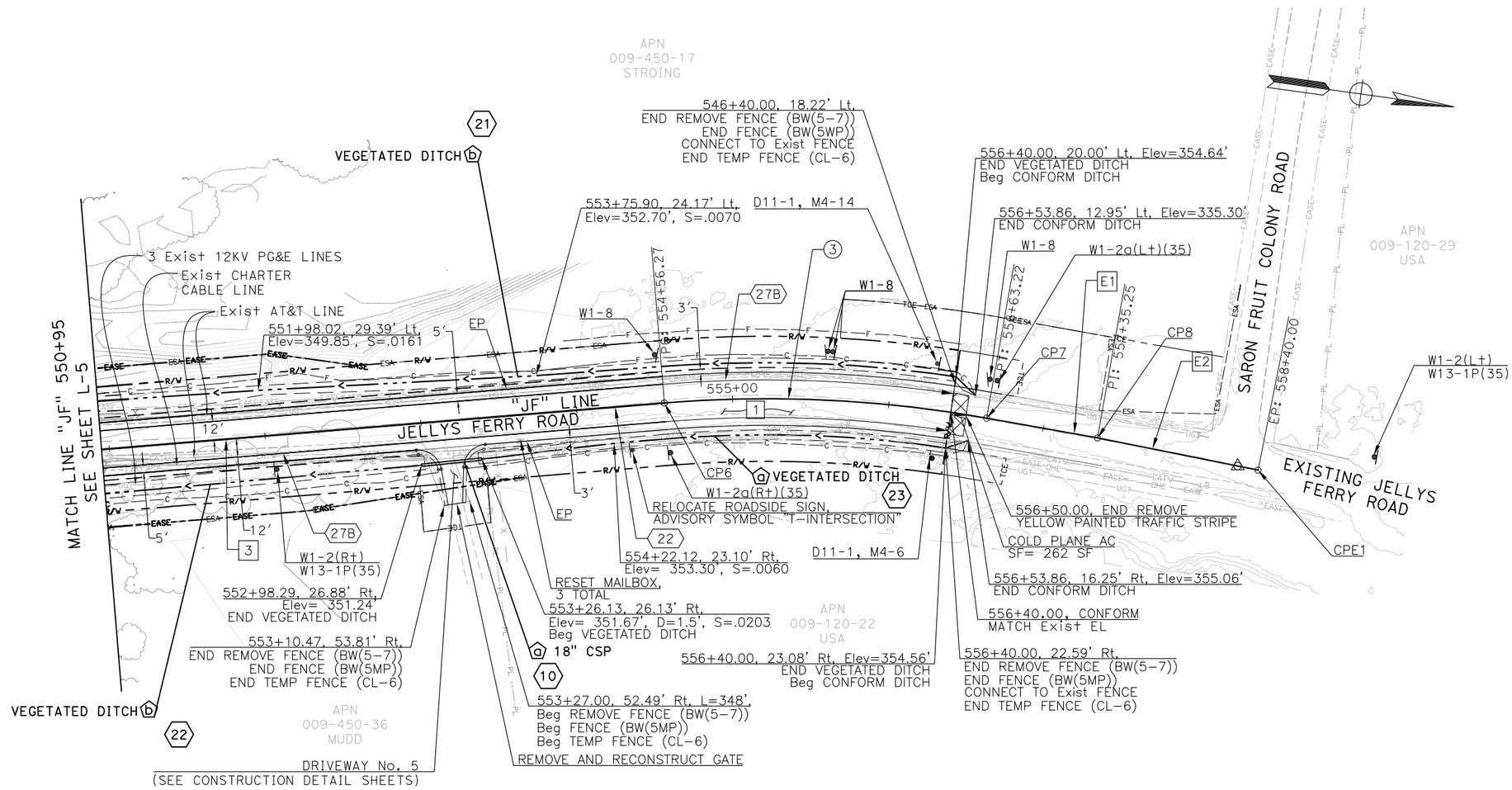

CALCULATED CONTROL POINTS			
No.	STATION	NORTHING	EASTING
CP6	PC "JF" 554+56.27	2003169.56	6508656.34
CP7	PT "JF" 556+63.22	2003375.09	6508637.72
CP8	EP "JF" 557+35.25	2003447.06	6508640.53
CPE1	PI "JF" 558+40.00	2003551.62	6508646.86

LINE TABLE		
No.	BEARING	DISTANCE
3	N 12° 35' 13" W	827.41
E1	N 02° 14' 06" E	72.02
E2	N 03° 27' 57" E	104.75

CURVE TABLE				
No.	R	Δ	T	L
3	800.00	14° 49' 19"	104.06	206.95

LAYOUT
SCALE: 1"=40'
L-6

65% SUBMITTAL, NOT FOR CONSTRUCTION

RELATIVE BORDER SCALE IS IN INCHES 0 1 2 3

REVISED BY	DATE REVISED

CALCULATED-DESIGNED BY: K. BEWSEY/ D. ZURCHER
CHECKED BY: KEITH RHODES

PROJECT ENGINEER: MICHAEL WOLOHAN

TEHAMA COUNTY DEPARTMENT OF PUBLIC WORKS
JELLYS FERRY IMPROVEMENT PROJECT

XRef List: | 054-BRDR | 054-C-RD | 054-X-TP | 054-X-UTIL | 054-X-LANDNET | 054-Drainage | 054-Proposed ROW | 054-Corridor | 054-Overflow Bridge Foundation |
Mar. 20, 2015 - 00:06:46 DWG Name: P:\710054 - Jellys Ferry Bridge\500_Engineering\510_Civil\511_CADD\SHEETS\054-L.dwg Updated By: DZurcher

Dist.	COUNTY	ROUTE	POST MILE TOTAL PROJECT	SHEET No.	TOTAL SHEETS
2	TEH	JF		16	138

REGISTERED CIVIL ENGINEER DATE

PLANS APPROVAL DATE

REGISTERED PROFESSIONAL ENGINEER K. BEWSEY No. 71485 Exp. 12/31/15 CIVIL STATE OF CALIFORNIA

T.Y. LIN INTERNATIONAL OR ITS OFFICERS OR AGENTS SHALL NOT BE RESPONSIBLE FOR THE ACCURACY OR COMPLETENESS OF ELECTRONIC COPIES OF THIS PLAN SHEET.

T·Y·LIN INTERNATIONAL
1601 RESPONSE ROAD, SUITE 260
SACRAMENTO, CA 95815

NOTES:

1. ALL DIMENSIONS ARE IN FEET UNLESS OTHERWISE SHOWN.
2. ALL STATIONING ALONG "JF" LINE UNLESS OTHERWISE NOTED.
3. FOR COMPLETE RIGHT OF WAY, SEE RIGHT OF WAY RECORD MAPS AT TEHAMA COUNTY.

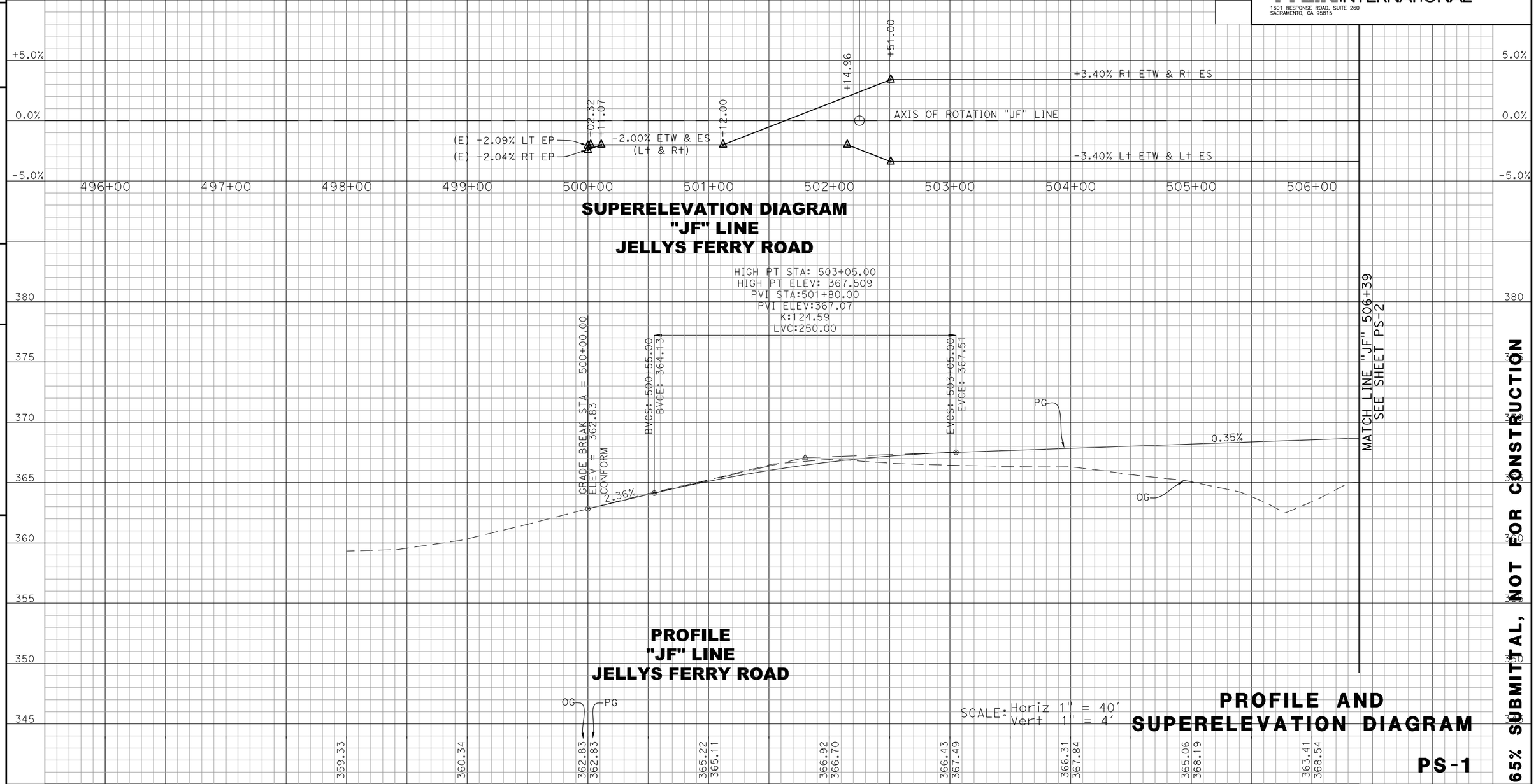

PROFILE AND SUPERELEVATION DIAGRAM

PS-1

65% SUBMITTAL, NOT FOR CONSTRUCTION

TEHAMA COUNTY DEPARTMENT OF PUBLIC WORKS

JELLYS FERRY IMPROVEMENT PROJECT

PROJECT ENGINEER: MICHAEL WOLOHAN

CALCULATED-DESIGNED BY: K. BEWSEY/ D. ZURCHER

CHECKED BY: KEITH RHODES

REVISED BY

DATE REVISED

RELATIVE BORDER SCALE IS IN INCHES 0 1 2 3

Dist.	COUNTY	ROUTE	POST MILE TOTAL PROJECT	SHEET No.	TOTAL SHEETS
2	TEH	JF		17	138

REGISTERED CIVIL ENGINEER DATE

PLANS APPROVAL DATE

REGISTERED PROFESSIONAL ENGINEER K. BEWSEY No. 71485 Exp. 12/31/15 CIVIL STATE OF CALIFORNIA

T.Y. LIN INTERNATIONAL OR ITS OFFICERS OR AGENTS SHALL NOT BE RESPONSIBLE FOR THE ACCURACY OR COMPLETENESS OF ELECTRONIC COPIES OF THIS PLAN SHEET.

T·Y·LIN INTERNATIONAL
1601 RESPONSE ROAD, SUITE 260
SACRAMENTO, CA 95815

NOTES:

1. ALL DIMENSIONS ARE IN FEET UNLESS OTHERWISE SHOWN.
2. ALL STATIONING ALONG "JF" LINE UNLESS OTHERWISE NOTED.
3. FOR COMPLETE RIGHT OF WAY, SEE RIGHT OF WAY RECORD MAPS AT TEHAMA COUNTY.

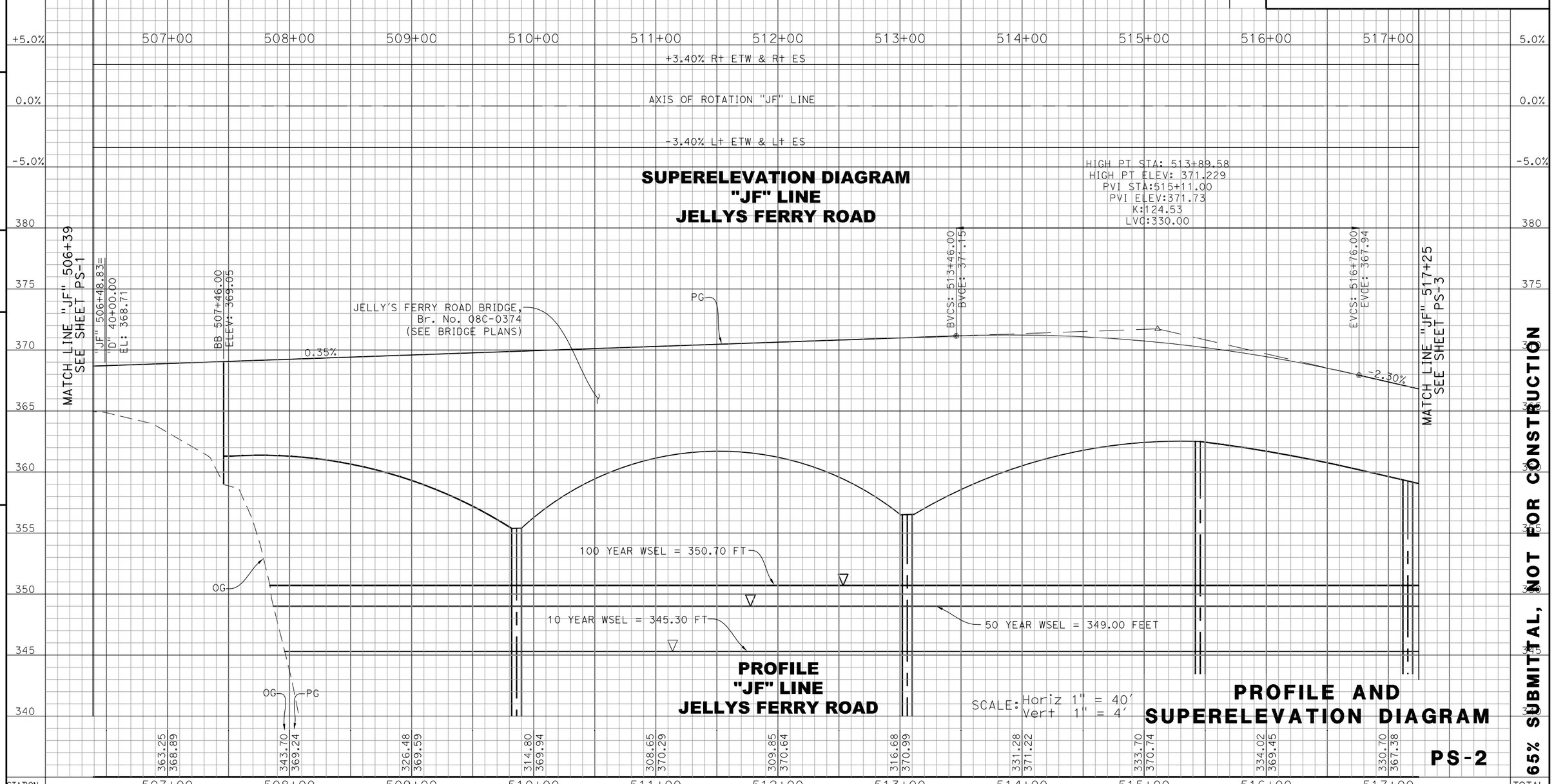

PS-2

65% SUBMITTAL, NOT FOR CONSTRUCTION

REVISED BY	DATE REVISED

CALCULATED-DESIGNED BY	CHECKED BY
K. BEWSEY/ D. ZURCHER	KEITH RHODES

PROJECT ENGINEER: MICHAEL WOLOHAN

TEHAMA COUNTY DEPARTMENT OF PUBLIC WORKS

JELLYS FERRY IMPROVEMENT PROJECT

RELATIVE BORDER SCALE IS IN INCHES 0 1 2 3

Dist.	COUNTY	ROUTE	POST MILE TOTAL PROJECT	SHEET No.	TOTAL SHEETS
2	TEH	JF		18	138

REGISTERED CIVIL ENGINEER DATE

PLANS APPROVAL DATE

REGISTERED PROFESSIONAL ENGINEER K. BEWSEY No. 71485 Exp. 12/31/15 CIVIL STATE OF CALIFORNIA

T.Y. LIN INTERNATIONAL OR ITS OFFICERS OR AGENTS SHALL NOT BE RESPONSIBLE FOR THE ACCURACY OR COMPLETENESS OF ELECTRONIC COPIES OF THIS PLAN SHEET.

T·Y·LIN INTERNATIONAL
1601 RESPONSE ROAD, SUITE 260
SACRAMENTO, CA 95815

NOTES:

1. ALL DIMENSIONS ARE IN FEET UNLESS OTHERWISE SHOWN.
2. ALL STATIONING ALONG "JF" LINE UNLESS OTHERWISE NOTED.
3. FOR COMPLETE RIGHT OF WAY, SEE RIGHT OF WAY RECORD MAPS AT TEHAMA COUNTY.

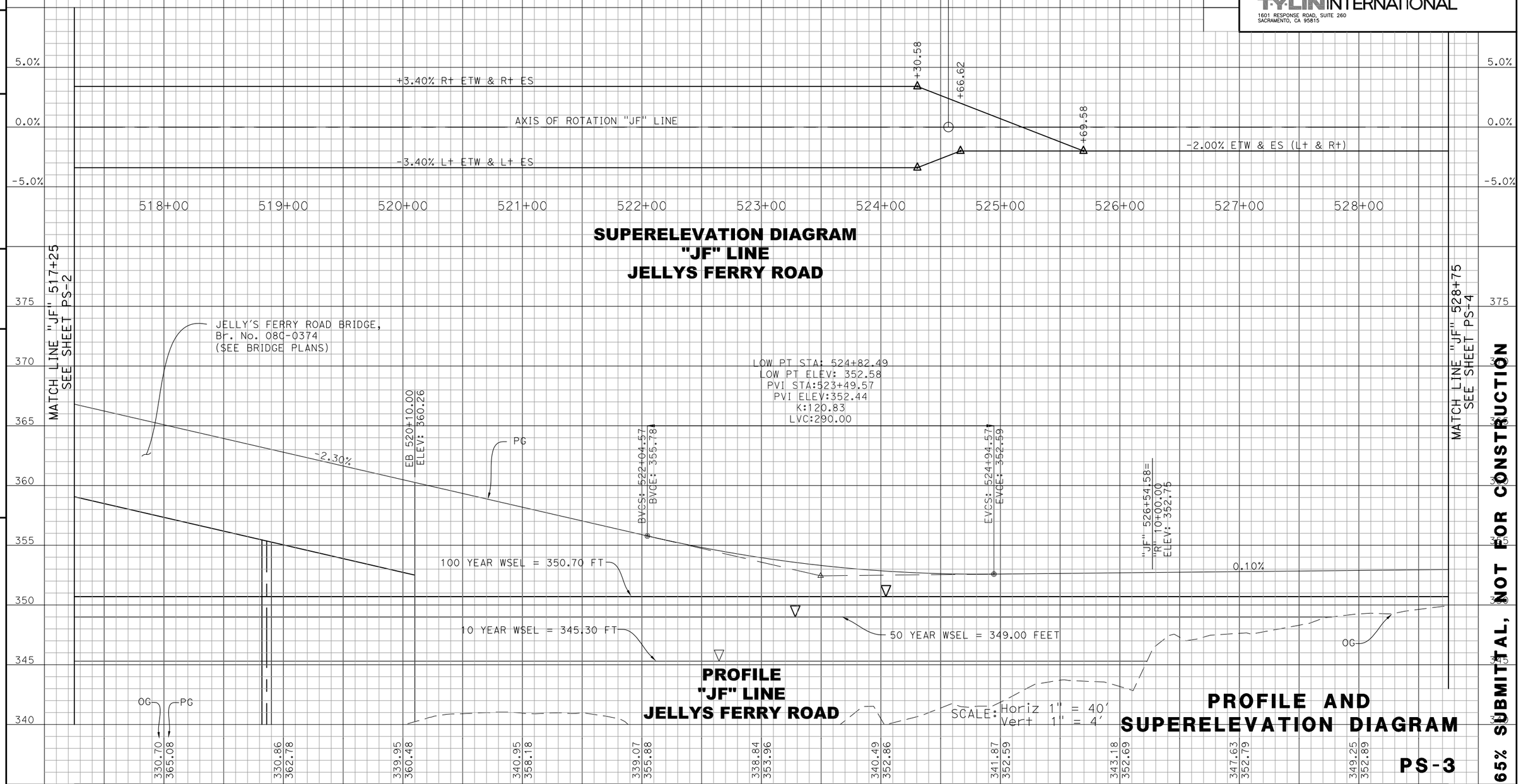

PROFILE AND SUPERELEVATION DIAGRAM

PS-3

65% SUBMITTAL, NOT FOR CONSTRUCTION

REVISED BY	DATE REVISED
K. BEWSEY/ D. ZURCHER	KEITH RHODES
CALCULATED-DESIGNED BY	CHECKED BY
PROJECT ENGINEER	MICHAEL WOLOHAN

RELATIVE BORDER SCALE IS IN INCHES 0 1 2 3

TEHAMA COUNTY DEPARTMENT OF PUBLIC WORKS

JELLYS FERRY IMPROVEMENT PROJECT

Dist.	COUNTY	ROUTE	POST MILE TOTAL PROJECT	SHEET No.	TOTAL SHEETS
2	TEH	JF		19	138

REGISTERED CIVIL ENGINEER DATE

PLANS APPROVAL DATE

REGISTERED PROFESSIONAL ENGINEER K. BEWSEY No. 71485 Exp. 12/31/15 CIVIL STATE OF CALIFORNIA

T.Y. LIN INTERNATIONAL OR ITS OFFICERS OR AGENTS SHALL NOT BE RESPONSIBLE FOR THE ACCURACY OR COMPLETENESS OF ELECTRONIC COPIES OF THIS PLAN SHEET.

T·Y·LIN INTERNATIONAL
1601 RESPONSE ROAD, SUITE 260
SACRAMENTO, CA 95815

NOTES:

1. ALL DIMENSIONS ARE IN FEET UNLESS OTHERWISE SHOWN.
2. ALL STATIONING ALONG "JF" LINE UNLESS OTHERWISE NOTED.
3. FOR COMPLETE RIGHT OF WAY, SEE RIGHT OF WAY RECORD MAPS AT TEHAMA COUNTY.

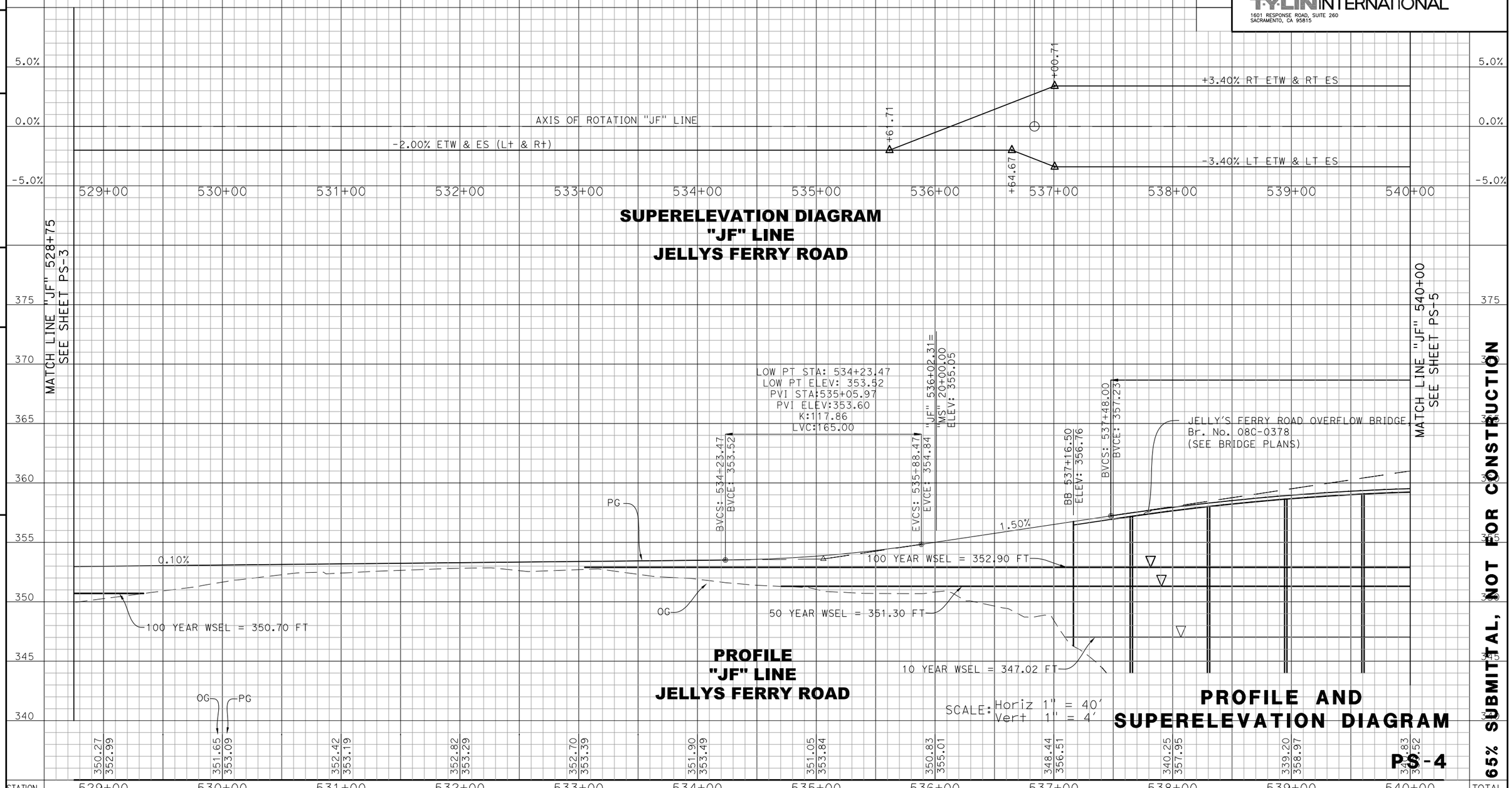

PS-4

65% SUBMITTAL, NOT FOR CONSTRUCTION

RELATIVE BORDER SCALE IS IN INCHES 0 1 2 3

REVISED BY	DATE REVISED

CALCULATED-DESIGNED BY	CHECKED BY
K. BEWSEY/ D. ZURCHER	KEITH RHODES

PROJECT ENGINEER: MICHAEL WOLOHAN

TEHAMA COUNTY DEPARTMENT OF PUBLIC WORKS
JELLYS FERRY IMPROVEMENT PROJECT

Dist.	COUNTY	ROUTE	POST MILE TOTAL PROJECT	SHEET No.	TOTAL SHEETS
2	TEH	JF		20	138

REGISTERED CIVIL ENGINEER DATE

PLANS APPROVAL DATE

REGISTERED PROFESSIONAL ENGINEER K. BEWSEY No. 71485 Exp. 12/31/15 CIVIL STATE OF CALIFORNIA

T.Y. LIN INTERNATIONAL OR ITS OFFICERS OR AGENTS SHALL NOT BE RESPONSIBLE FOR THE ACCURACY OR COMPLETENESS OF ELECTRONIC COPIES OF THIS PLAN SHEET.

T·Y·LIN INTERNATIONAL
1601 RESPONSE ROAD, SUITE 260
SACRAMENTO, CA 95815

NOTES:

1. ALL DIMENSIONS ARE IN FEET UNLESS OTHERWISE SHOWN.
2. ALL STATIONING ALONG "JF" LINE UNLESS OTHERWISE NOTED.
3. FOR COMPLETE RIGHT OF WAY, SEE RIGHT OF WAY RECORD MAPS AT TEHAMA COUNTY.

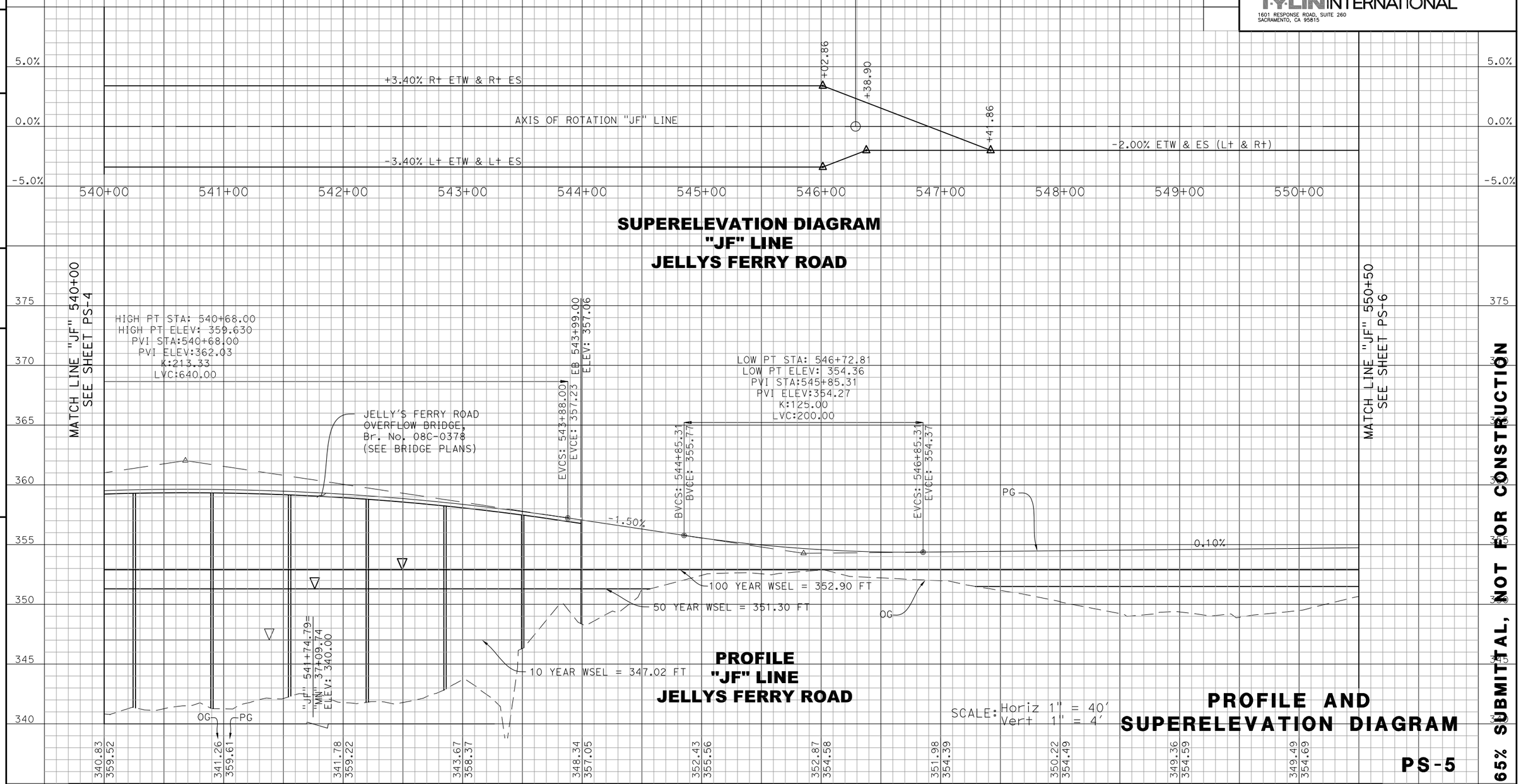

PROFILE AND SUPERELEVATION DIAGRAM

PS-5

65% SUBMITTAL, NOT FOR CONSTRUCTION

TEHAMA COUNTY DEPARTMENT OF PUBLIC WORKS
JELLYS FERRY IMPROVEMENT PROJECT

PROJECT ENGINEER MICHAEL WOLOHAN

CALCULATED-DESIGNED BY K. BEWSEY/ D. ZURCHER
CHECKED BY KEITH RHODES

REVISED BY
DATE REVISED

RELATIVE BORDER SCALE IS IN INCHES 0 1 2 3

Dist.	COUNTY	ROUTE	POST MILE TOTAL PROJECT	SHEET No.	TOTAL SHEETS
2	TEH	JF		21	138

REGISTERED CIVIL ENGINEER DATE

PLANS APPROVAL DATE

REGISTERED PROFESSIONAL ENGINEER K. BEWSEY No. 71485 Exp. 12/31/15 CIVIL STATE OF CALIFORNIA

T.Y. LIN INTERNATIONAL OR ITS OFFICERS OR AGENTS SHALL NOT BE RESPONSIBLE FOR THE ACCURACY OR COMPLETENESS OF ELECTRONIC COPIES OF THIS PLAN SHEET.

T·Y·LIN INTERNATIONAL
1601 RESPONSE ROAD, SUITE 260
SACRAMENTO, CA 95815

NOTES:

1. ALL DIMENSIONS ARE IN FEET UNLESS OTHERWISE SHOWN.
2. ALL STATIONING ALONG "JF" LINE UNLESS OTHERWISE NOTED.
3. FOR COMPLETE RIGHT OF WAY, SEE RIGHT OF WAY RECORD MAPS AT TEHAMA COUNTY.

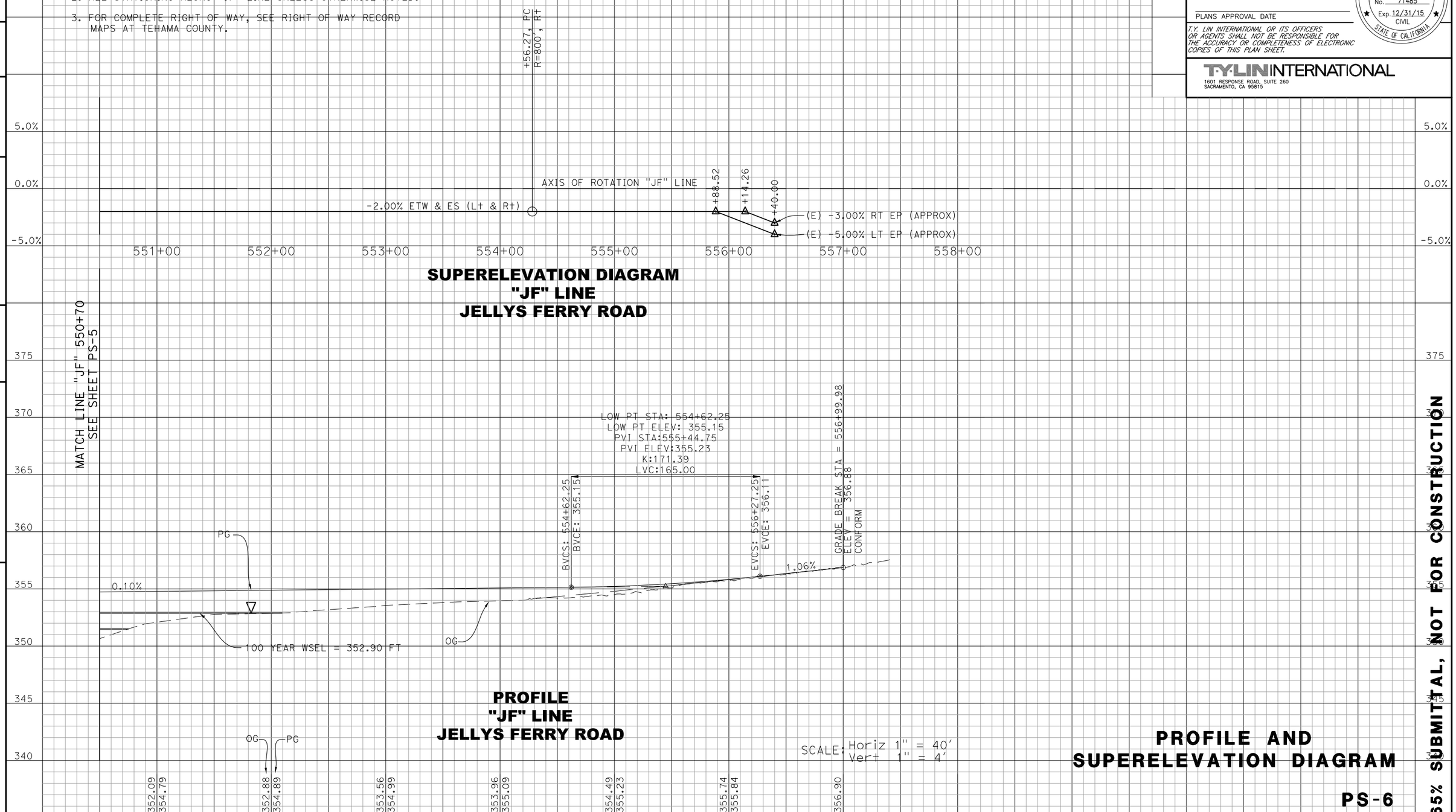

PROFILE AND SUPERELEVATION DIAGRAM

PS-6

65% SUBMITTAL, NOT FOR CONSTRUCTION

REVISED BY	DATE REVISED

CALCULATED-DESIGNED BY	CHECKED BY
K. BEWSEY/ D. ZURCHER	KEITH RHODES

PROJECT ENGINEER: MICHAEL WOLOHAN

TEHAMA COUNTY DEPARTMENT OF PUBLIC WORKS
JELLYS FERRY IMPROVEMENT PROJECT

RELATIVE BORDER SCALE IS IN INCHES 0 1 2 3

Dist.	COUNTY	ROUTE	POST MILE TOTAL PROJECT	SHEET No.	TOTAL SHEETS
2	TEH	JF		22	138

REGISTERED CIVIL ENGINEER DATE

PLANS APPROVAL DATE

REGISTERED PROFESSIONAL ENGINEER K. BEWSEY No. 71485 Exp. 12/31/15 CIVIL STATE OF CALIFORNIA

T.Y. LIN INTERNATIONAL OR ITS OFFICERS OR AGENTS SHALL NOT BE RESPONSIBLE FOR THE ACCURACY OR COMPLETENESS OF ELECTRONIC COPIES OF THIS PLAN SHEET.

T·Y·LIN INTERNATIONAL
1601 RESPONSE ROAD, SUITE 260
SACRAMENTO, CA 95815

NOTES:

1. ALL DIMENSIONS ARE IN FEET UNLESS OTHERWISE SHOWN.
2. ALL STATIONING ALONG "R" LINE UNLESS OTHERWISE NOTED.
3. FOR COMPLETE RIGHT OF WAY, SEE RIGHT OF WAY RECORD MAPS AT TEHAMA COUNTY.

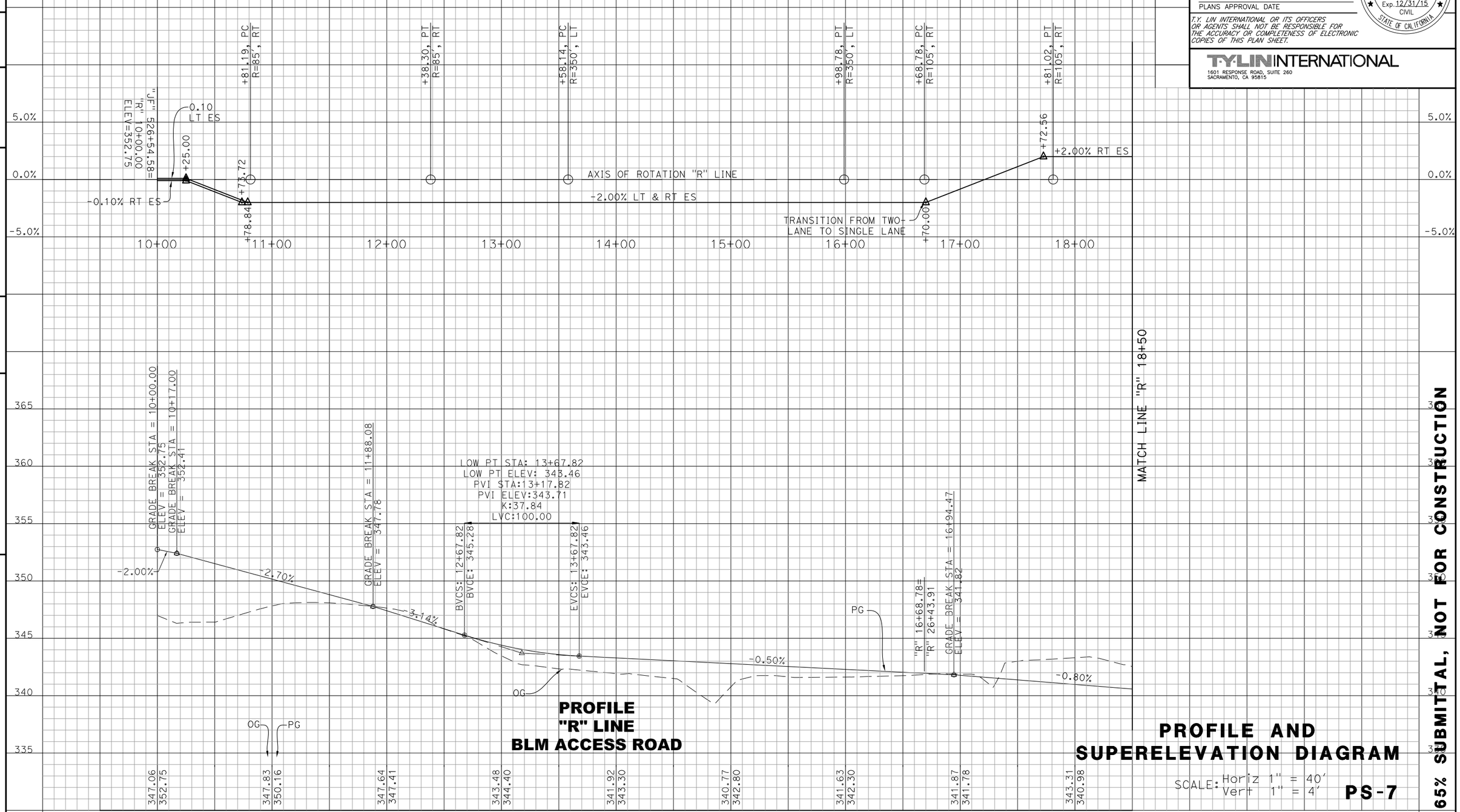

PROFILE
"R" LINE
BLM ACCESS ROAD

PROFILE AND SUPERELEVATION DIAGRAM

SCALE: Horiz 1" = 40'
Vert 1" = 4'

PS-7

65% SUBMITTAL, NOT FOR CONSTRUCTION

TEHAMA COUNTY DEPARTMENT OF PUBLIC WORKS
JELLYS FERRY IMPROVEMENT PROJECT

PROJECT ENGINEER MICHAEL WOLOHAN

CALCULATED-DESIGNED BY K. BEWSEY/ D. ZURCHER
CHECKED BY KEITH RHODES

REVISED BY
DATE REVISED

RELATIVE BORDER SCALE IS IN INCHES 0 1 2 3

Dist.	COUNTY	ROUTE	POST MILE TOTAL PROJECT	SHEET No.	TOTAL SHEETS
2	TEH	JF		23	138

REGISTERED CIVIL ENGINEER DATE

PLANS APPROVAL DATE

REGISTERED PROFESSIONAL ENGINEER K. BEWSEY No. 71485 Exp. 12/31/15 CIVIL STATE OF CALIFORNIA

T.Y. LIN INTERNATIONAL OR ITS OFFICERS OR AGENTS SHALL NOT BE RESPONSIBLE FOR THE ACCURACY OR COMPLETENESS OF ELECTRONIC COPIES OF THIS PLAN SHEET.

T·Y·LIN INTERNATIONAL
1601 RESPONSE ROAD, SUITE 260
SACRAMENTO, CA 95815

NOTES:

1. ALL DIMENSIONS ARE IN FEET UNLESS OTHERWISE SHOWN.
2. ALL STATIONING ALONG "R" LINE UNLESS OTHERWISE NOTED.
3. FOR COMPLETE RIGHT OF WAY, SEE RIGHT OF WAY RECORD MAPS AT TEHAMA COUNTY.

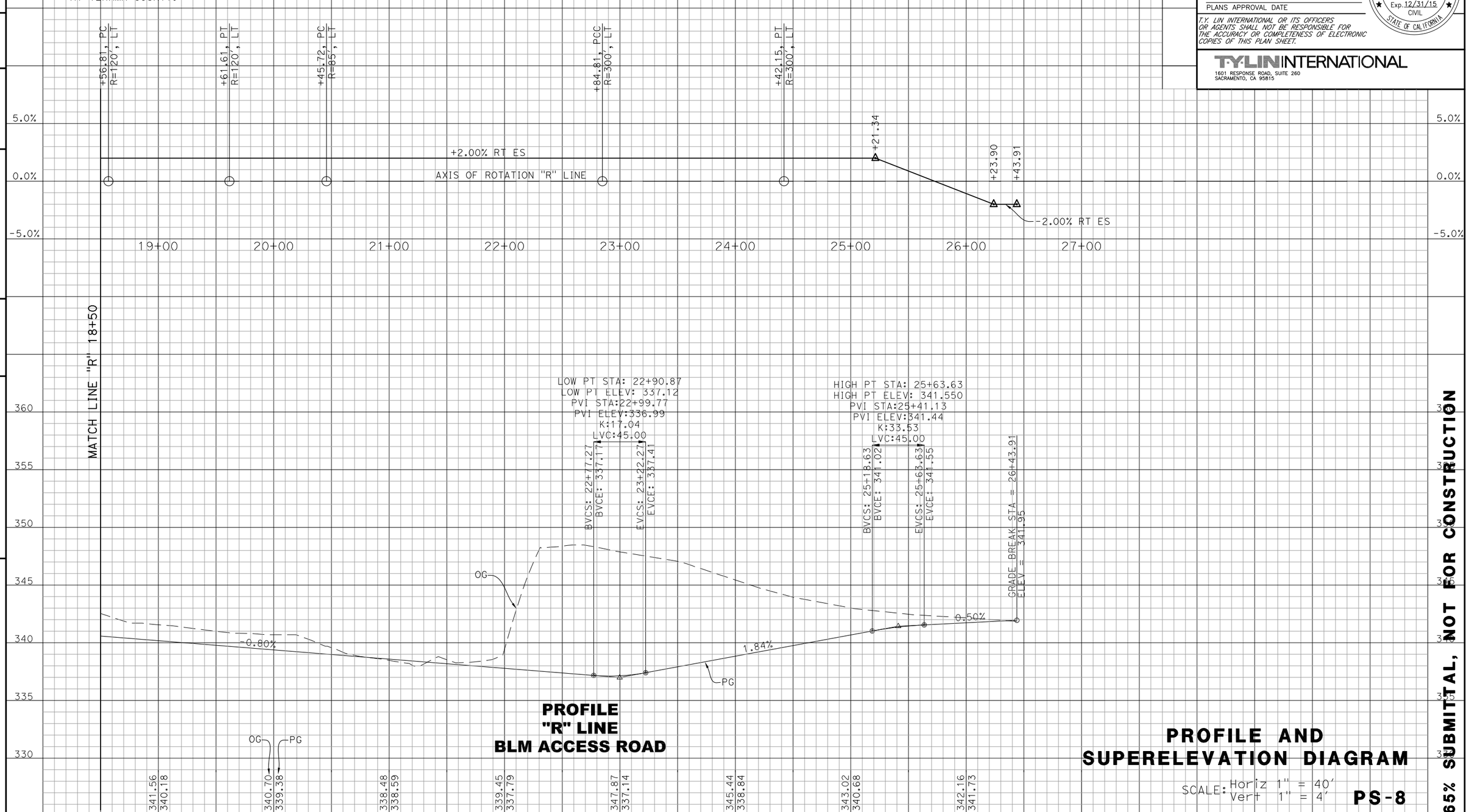

PROFILE
"R" LINE
BLM ACCESS ROAD

PROFILE AND SUPERELEVATION DIAGRAM

SCALE: Horiz 1" = 40'
Vert 1" = 4'

PS-8

65% SUBMITTAL, NOT FOR CONSTRUCTION

RELATIVE BORDER SCALE IS IN INCHES 0 1 2 3

REVISED BY	DATE REVISED

CALCULATED-DESIGNED BY	CHECKED BY
K. BEWSEY/ D. ZURCHER	KEITH RHODES

PROJECT ENGINEER: MICHAEL WOLOHAN

TEHAMA COUNTY DEPARTMENT OF PUBLIC WORKS

JELLYS FERRY IMPROVEMENT PROJECT

Dist.	COUNTY	ROUTE	POST MILE TOTAL PROJECT	SHEET No.	TOTAL SHEETS
2	TEH	JF		24	138

REGISTERED CIVIL ENGINEER DATE

PLANS APPROVAL DATE

REGISTERED PROFESSIONAL ENGINEER K. BEWSEY No. 71485 Exp. 12/31/15 CIVIL STATE OF CALIFORNIA

T.Y. LIN INTERNATIONAL OR ITS OFFICERS OR AGENTS SHALL NOT BE RESPONSIBLE FOR THE ACCURACY OR COMPLETENESS OF ELECTRONIC COPIES OF THIS PLAN SHEET.

T·Y·LIN INTERNATIONAL
1601 RESPONSE ROAD, SUITE 260
SACRAMENTO, CA 95815

NOTES:

1. ALL DIMENSIONS ARE IN FEET UNLESS OTHERWISE SHOWN.
2. ALL STATIONING ALONG PERSPECTIVE DRIVEWAY LINE UNLESS OTHERWISE NOTED.
3. FOR COMPLETE RIGHT OF WAY, SEE RIGHT OF WAY RECORD MAPS AT TEHAMA COUNTY.

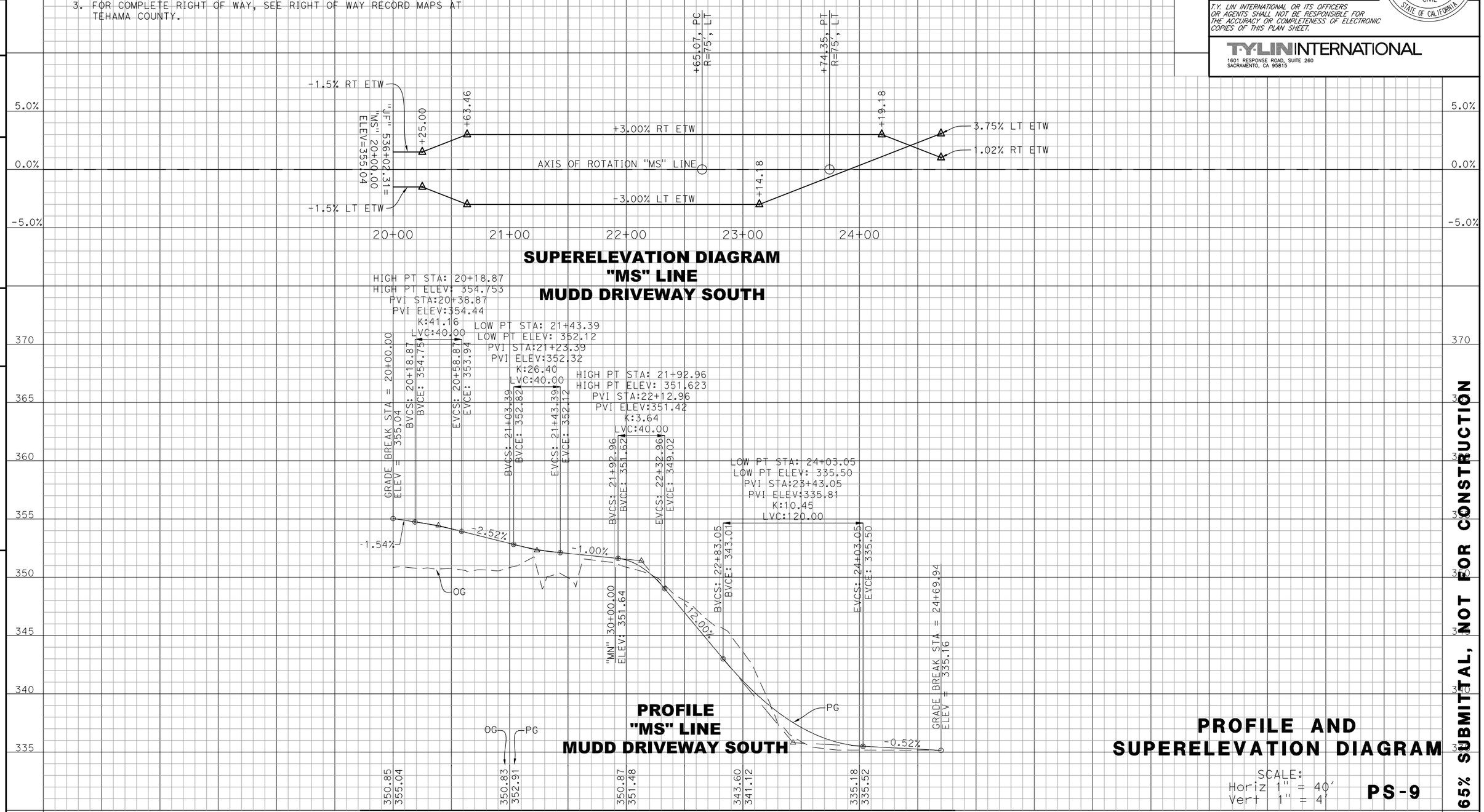

PROFILE AND SUPERELEVATION DIAGRAM

SCALE:
Horiz 1" = 40'
Vert 1" = 4'

PS-9

65% SUBMITTAL, NOT FOR CONSTRUCTION

TEHAMA COUNTY DEPARTMENT OF PUBLIC WORKS
JELLYS FERRY IMPROVEMENT PROJECT

PROJECT ENGINEER MICHAEL WOLOHAN

CALCULATED-DESIGNED BY K. BEWSEY/ D. ZURCHER
CHECKED BY KEITH RHODES

REVISED BY
DATE REVISED

RELATIVE BORDER SCALE IS IN INCHES 0 1 2 3

Dist.	COUNTY	ROUTE	POST MILE TOTAL PROJECT	SHEET No.	TOTAL SHEETS
2	TEH	JF		25	138

REGISTERED CIVIL ENGINEER DATE

PLANS APPROVAL DATE

REGISTERED PROFESSIONAL ENGINEER K. BEWSEY No. 71485 Exp. 12/31/15 CIVIL STATE OF CALIFORNIA

T.Y. LIN INTERNATIONAL OR ITS OFFICERS OR AGENTS SHALL NOT BE RESPONSIBLE FOR THE ACCURACY OR COMPLETENESS OF ELECTRONIC COPIES OF THIS PLAN SHEET.

T·Y·LIN INTERNATIONAL
1601 RESPONSE ROAD, SUITE 260
SACRAMENTO, CA 95815

NOTES:

1. ALL DIMENSIONS ARE IN FEET UNLESS OTHERWISE SHOWN.
2. ALL STATIONING ALONG PERSPECTIVE DRIVEWAY LINE UNLESS OTHERWISE NOTED.
3. FOR COMPLETE RIGHT OF WAY, SEE RIGHT OF WAY RECORD MAPS AT TEHAMA COUNTY.

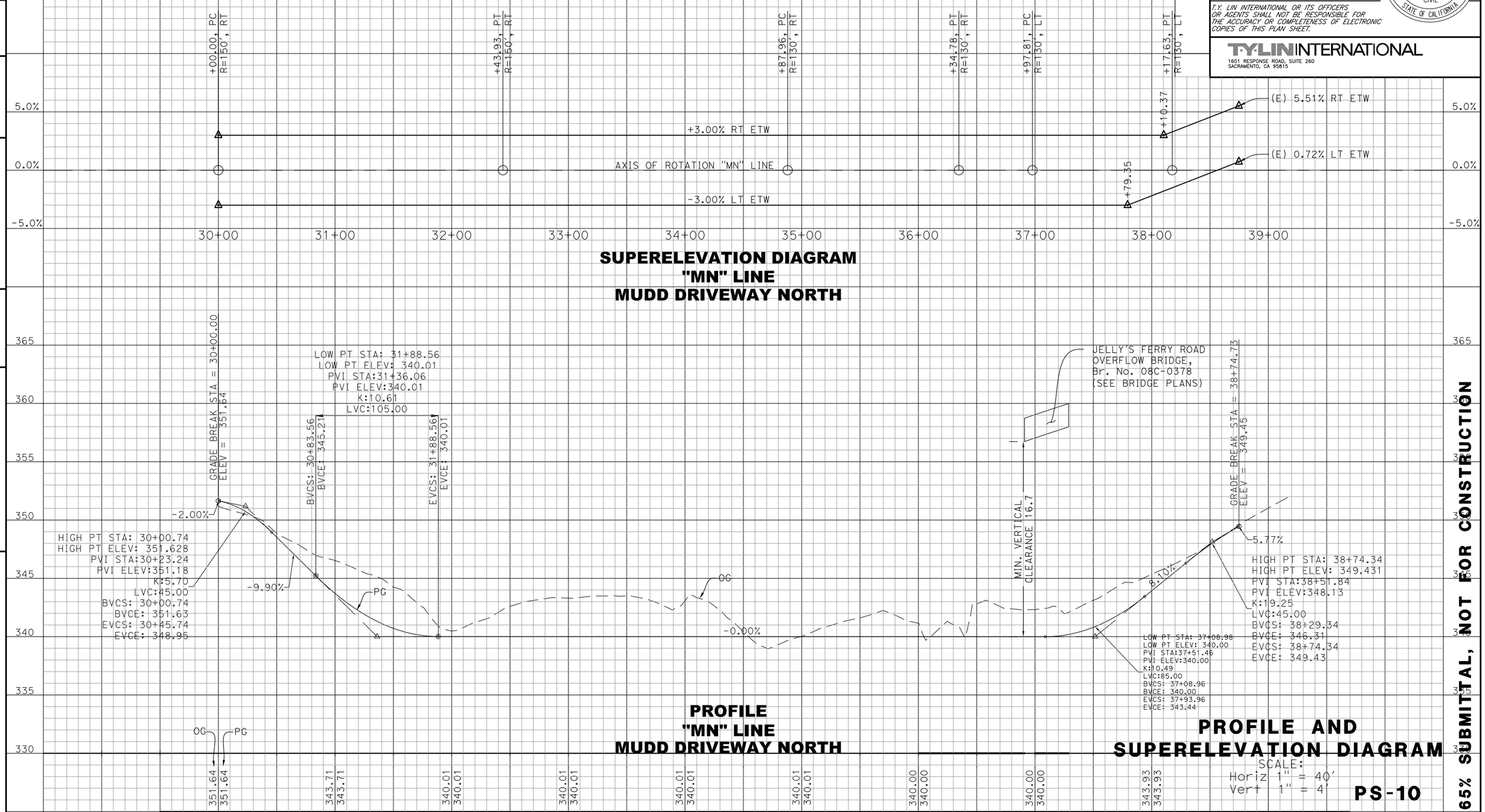

65% SUBMITTAL, NOT FOR CONSTRUCTION

RELATIVE BORDER SCALE IS IN INCHES 0 1 2 3

REVISED BY	DATE REVISED

CALCULATED-DESIGNED BY	CHECKED BY
K. BEWSEY/ D. ZURCHER	KEITH RHODES

PROJECT ENGINEER: MICHAEL WOLOHAN

TEHAMA COUNTY DEPARTMENT OF PUBLIC WORKS
JELLYS FERRY IMPROVEMENT PROJECT

Dist.	COUNTY	ROUTE	POST MILE TOTAL PROJECT	SHEET No.	TOTAL SHEETS
2	TEH	JF		26	138

REGISTERED CIVIL ENGINEER DATE

PLANS APPROVAL DATE

REGISTERED PROFESSIONAL ENGINEER K. BEWSEY No. 71485 Exp. 12/31/15 CIVIL STATE OF CALIFORNIA

T.Y. LIN INTERNATIONAL OR ITS OFFICERS OR AGENTS SHALL NOT BE RESPONSIBLE FOR THE ACCURACY OR COMPLETENESS OF ELECTRONIC COPIES OF THIS PLAN SHEET.

T·Y·LIN INTERNATIONAL
1601 RESPONSE ROAD, SUITE 260
SACRAMENTO, CA 95815

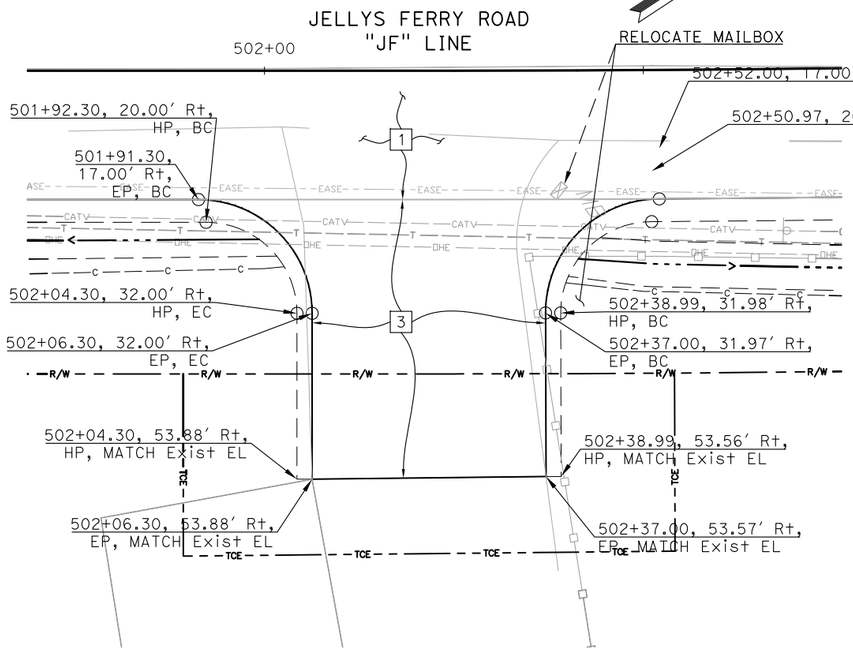

DRIVEWAY No. 1

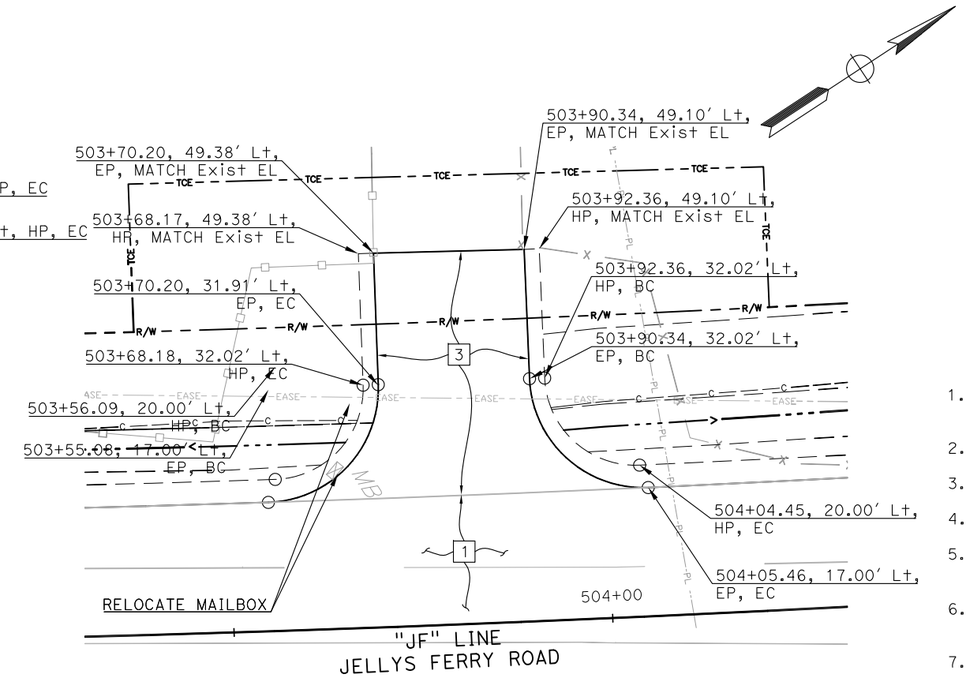

DRIVEWAY No. 2

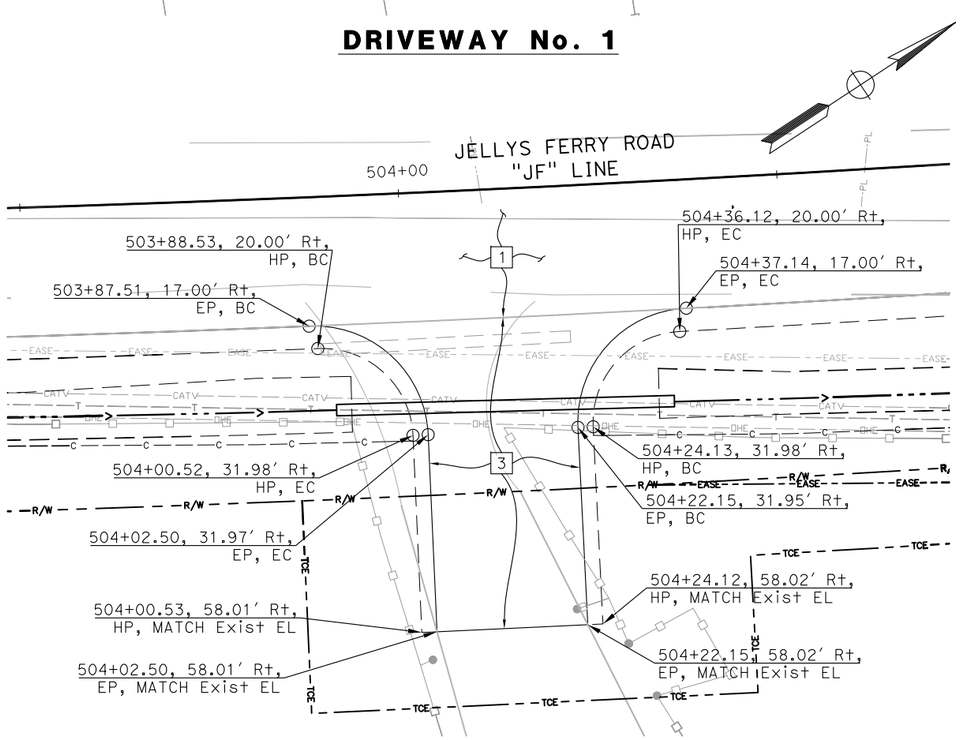

DRIVEWAY No. 3

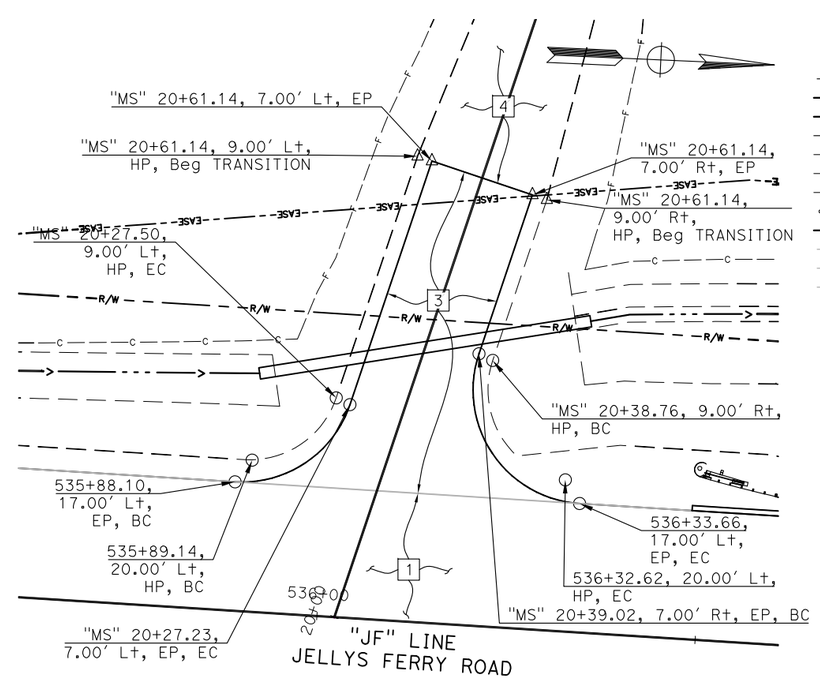

MUDD SOUTH ROAD

NOTES:

1. FG SLOPE AT CONFORM SHALL BE WITHIN 5% OF THE OG SLOPE BEHIND THE CONFORM.
2. MAXIMUM GRADE BREAK = 5%.
3. SEE SHEET X-1 FOR STRUCTURAL SECTIONS.
4. SEE SHEET C-5 FOR GENERAL DRIVEWAY DATA.
5. ALL DIMENSIONS ARE IN FEET UNLESS OTHERWISE NOTED.
6. ALL STATIONING IS ALONG THE "JF" LINE UNLESS OTHERWISE SPECIFIED.
7. FOR COMPLETE RIGHT OF WAY, SEE RIGHT OF WAY RECORD MAPS AT TEHAMA COUNTY.

LEGEND

- X — LINE NUMBER, SEE LINE TABLE
- X — CURVE NUMBER, SEE CURVE TABLE
- D — STRUCTURAL SECTION, SEE SHEET X-1
- R/W — RIGHT OF WAY
- TCE — TEMPORARY CONSTRUCTION EASEMENT
- EASE — TEMPORARY CONSTRUCTION EASEMENT
- METAL BEAM GUARD RAIL
- HINGE
- F — FILL
- C — CUT
- ROCK BARRIER
- FLOWLINE
- X — Exist WIRE FENCE
- Exist WOOD FENCE
- Exist FLOWLINE
- RS — REMOVE SIGN AND SALVAGE TO PROPERTY OWNER
- BEGIN OR END CURVE
- ANGLE POINT
- INSTALL ROADSIDE SIGN
- REMOVE ROADSIDE SIGN, AS NOTED
- Exist SIGN TO PROTECT IN PLACE
- RELOCATE SIGN — FROM / TO

CONSTRUCTION DETAILS

SCALE: 1"=10'

C-1

65% SUBMITTAL, NOT FOR CONSTRUCTION

THIS PLAN ACCURATE FOR DRIVEWAY LAYOUT, PAVEMENT ELEVATIONS, AND MISCELLANEOUS DETAILS ONLY

REVISED BY	DATE REVISED

CALCULATED-DESIGNED BY	CHECKED BY
K. BEWSEY/ D. ZURCHER	KEITH RHODES

PROJECT ENGINEER: MICHAEL WOLOHAN

TEHAMA COUNTY DEPARTMENT OF PUBLIC WORKS

JELLYS FERRY IMPROVEMENT PROJECT

RELATIVE BORDER SCALE IS IN INCHES 0 1 2 3

XRef List: | 054-BRDR | 054-C-RD | 054-X-TP | 054-Proposed ROW | 054-X-LANDNET | 054-X-UTIL | 054-Corridor | 054-Drainage |
Mar. 20, 2015 - 01:27:02 DWG Name: P:\170054 - Jellys Ferry Bridge\500_Engineering\510_Civil\511_CADD\SHEETS\054-C.dwg Updated By: DZurcher

Dist.	COUNTY	ROUTE	POST MILE TOTAL PROJECT	SHEET No.	TOTAL SHEETS
2	TEH	JF		27	138

REGISTERED CIVIL ENGINEER DATE

PLANS APPROVAL DATE

REGISTERED PROFESSIONAL ENGINEER K. BEWSEY No. 71485 Exp. 12/31/15 CIVIL STATE OF CALIFORNIA

T.Y. LIN INTERNATIONAL OR ITS OFFICERS OR AGENTS SHALL NOT BE RESPONSIBLE FOR THE ACCURACY OR COMPLETENESS OF ELECTRONIC COPIES OF THIS PLAN SHEET.

T·Y·LIN INTERNATIONAL
1601 RESPONSE ROAD, SUITE 260
SACRAMENTO, CA 95815

NOTES:

1. SEE SHEET C-1 FOR NOTES AND LEGEND.
2. ALL STATIONING IS ALONG THE "D" LINE UNLESS OTHERWISE SPECIFIED.
3. SEE TYPICAL DRIVEWAY ENCROACHMENT WITH CULVERT DETAIL.

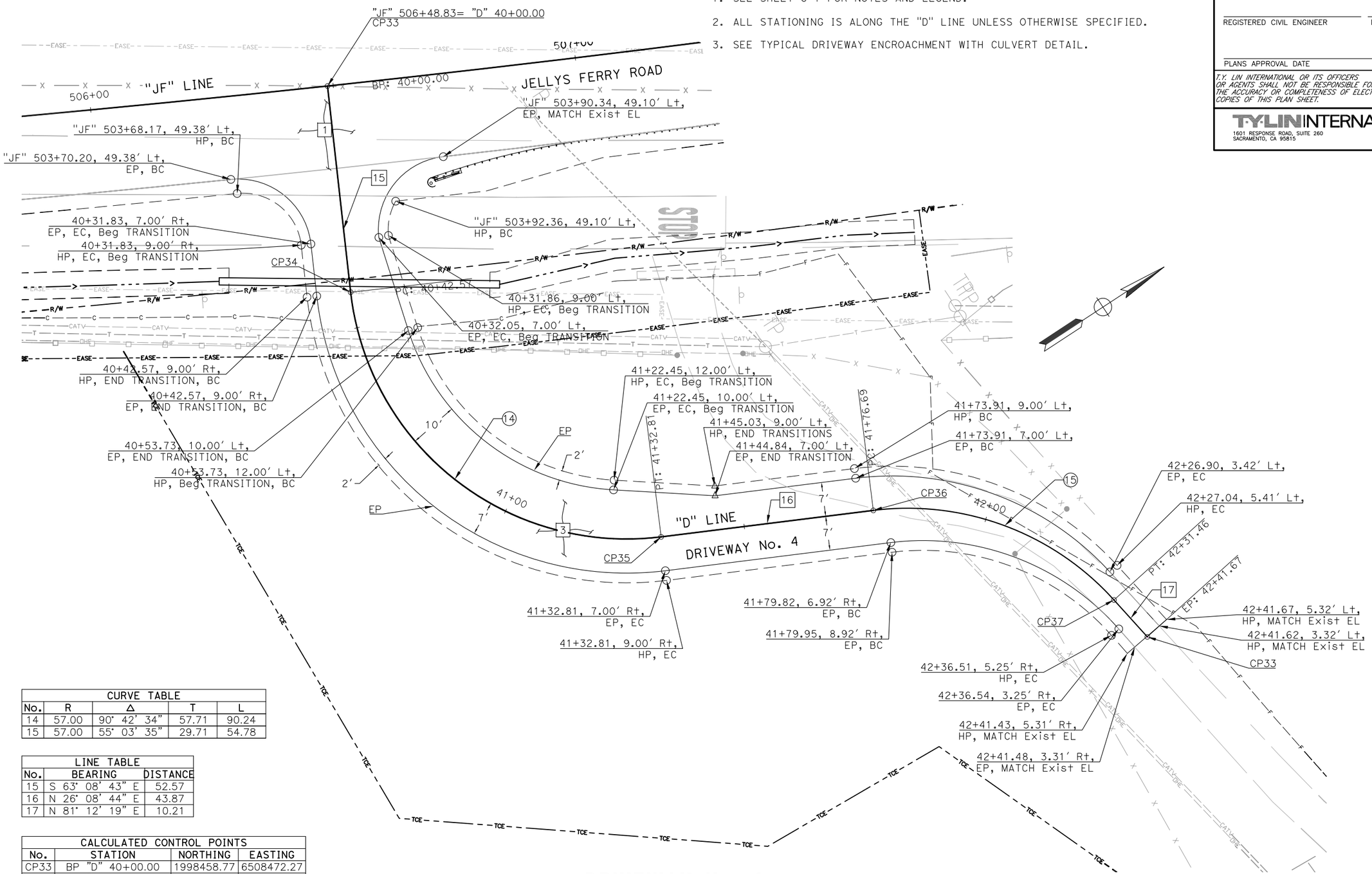

CURVE TABLE				
No.	R	Δ	T	L
14	57.00	90° 42' 34"	57.71	90.24
15	57.00	55° 03' 35"	29.71	54.78

LINE TABLE		
No.	BEARING	DISTANCE
15	S 63° 08' 43" E	52.57
16	N 26° 08' 44" E	43.87
17	N 81° 12' 19" E	10.21

CALCULATED CONTROL POINTS			
No.	STATION	NORTHING	EASTING
CP33	BP "D" 40+00.00	1998458.77	6508472.27
CP34	PC "D" 40+42.57	1998439.54	6508510.25
CP35	PT "D" 41+32.81	1998465.28	6508587.16
CP36	PC "D" 41+76.69	1998504.66	6508606.50
CP37	PT "D" 42+31.46	1998535.88	6508648.95
CP38	EP "D" 42+41.67	1998537.44	6508659.04

DRIVEWAY No. 4

CONSTRUCTION DETAILS

SCALE: 1"=10'

C-2

65% SUBMITTAL, NOT FOR CONSTRUCTION

THIS PLAN ACCURATE FOR DRIVEWAY LAYOUT, PAVEMENT ELEVATIONS, AND MISCELLANEOUS DETAILS ONLY

RELATIVE BORDER SCALE IS IN INCHES 0 1 2 3

REVISED BY | DATE REVISED

K. BEWSEY/ D. ZURCHER | KEITH RHODES

CALCULATED-DESIGNED BY | CHECKED BY

PROJECT ENGINEER: MICHAEL WOLOHAN

TEHAMA COUNTY DEPARTMENT OF PUBLIC WORKS

JELLYS FERRY IMPROVEMENT PROJECT

XRef List: | 054-BRDR | 054-C-RD | 054-X-TP | 054-Proposed ROW | 054-X-LANDNET | 054-X-UTIL | 054-Corridor | 054-Drainage |
Mar 20, 2015 - 01:27:02 DWG Name: P:\710054 - Jellys Ferry Bridge\500_Engineering\510_Civil\S11_CADD\SHEETS\054-C.dwg Updated By: DZurcher

Dist.	COUNTY	ROUTE	POST MILE TOTAL PROJECT	SHEET No.	TOTAL SHEETS
2	TEH	JF		28	138

REGISTERED CIVIL ENGINEER DATE

PLANS APPROVAL DATE

REGISTERED PROFESSIONAL ENGINEER K. BEWSEY No. 71485 Exp. 12/31/15 CIVIL STATE OF CALIFORNIA

T.Y. LIN INTERNATIONAL OR ITS OFFICERS OR AGENTS SHALL NOT BE RESPONSIBLE FOR THE ACCURACY OR COMPLETENESS OF ELECTRONIC COPIES OF THIS PLAN SHEET.

T·Y·LIN INTERNATIONAL
1601 RESPONSE ROAD, SUITE 260
SACRAMENTO, CA 95815

NOTES:

1. SEE SHEET C-1 FOR NOTES AND LEGEND.
2. ALL STATIONING IS ALONG THE "R" LINE UNLESS OTHERWISE SPECIFIED.

CALCULATED CONTROL POINTS			
No.	STATION	NORTHING	EASTING
CP20	BP "R" 10+00.00	2000394.92	6508912.46
CP21	PC "R" 10+81.19	2000393.43	6508993.64
CP22	PT "R" 12+38.30	2000283.65	6509073.38
CP23	PC "R" 13+58.14	2000169.03	6509038.42
CP24	PT "R" 15+98.77	1999933.38	6509049.68
CP25	PC "R" 16+68.78	1999868.67	6509076.40
CP26	PT "R" 17+81.02	1999762.78	6509061.16
CP27	PC "R" 18+56.81	1999703.73	6509013.65
CP28	PT "R" 19+61.61	1999605.16	6508989.45
CP29	PC "R" 20+45.73	1999522.65	6509005.82
CP30	PCC "R" 22+84.81	1999527.94	6509173.44
CP31	PT "R" 24+42.16	1999682.19	6509153.39
CP32	EP "R" 26+43.91	1999868.67	6509076.40

LINE TABLE		
No.	BEARING	DISTANCE
9	N 88° 56' 46" W	81.19
10	S 16° 57' 36" W	119.84
11	S 22° 25' 59" E	70.00
12	S 38° 48' 57" W	75.69
13	S 11° 13' 27" E	75.69
14	N 22° 25' 59" W	201.75

CURVE TABLE				
No.	R	Δ	T	L
8	85.00	105° 54' 22"	112.61	157.11
9	350.00	39° 23' 35"	125.29	240.64
10	105.00	61° 14' 56"	62.16	112.24
11	120.00	50° 02' 24"	56.01	104.80
12	85.00	161° 09' 29"	512.28	239.08
13	300.00	30° 03' 04"	80.53	157.35

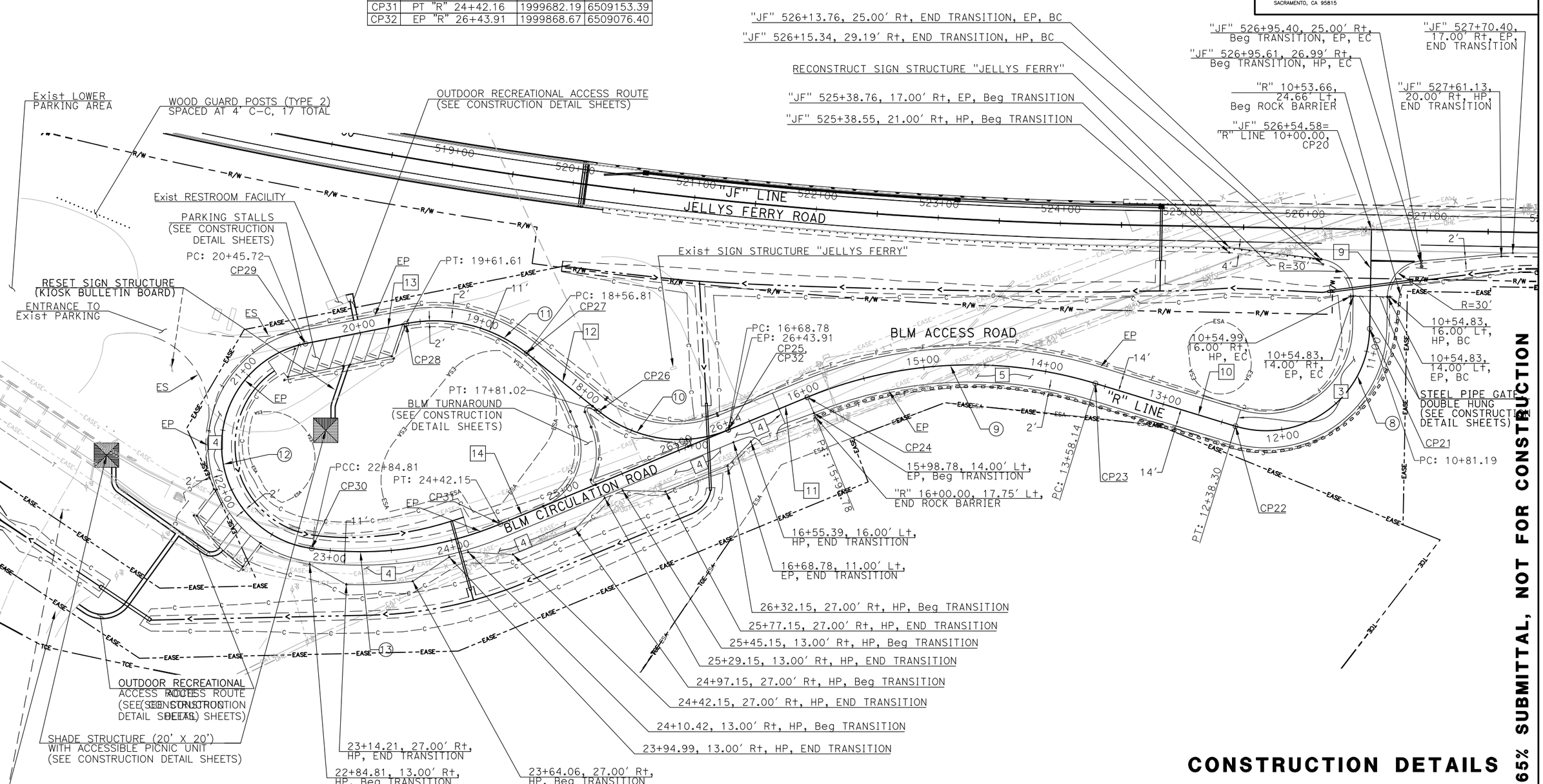

BLM ROAD

THIS PLAN ACCURATE FOR DRIVEWAY LAYOUT, PAVEMENT ELEVATIONS, AND MISCELLANEOUS DETAILS ONLY

CONSTRUCTION DETAILS

SCALE: 1"=40'

C-3

65% SUBMITTAL, NOT FOR CONSTRUCTION

RELATIVE BORDER SCALE IS IN INCHES	0 1 2 3
REVISED BY	DATE REVISED
K. BEWSEY/ D. ZURCHER	KEITH RHODES
CALCULATED-DESIGNED BY	CHECKED BY
PROJECT ENGINEER	MICHAEL WOLOHAN

TEHAMA COUNTY DEPARTMENT OF PUBLIC WORKS

JELLYS FERRY IMPROVEMENT PROJECT

XRef List: | 054-BRDR | 054-C-RD | 054-X-TP | 054-Proposed ROW | 054-X-LANDNET | 054-X-UTIL | 054-Corridor | 054-Drainage |
Mar 20, 2015 - 01:27:02 DWG Name: P:\710054 - Jellys Ferry Bridge\500_Engineering\510_Civil\S11_CADD\SHEETS\054-C.dwg Updated By: DZurcher

Dist.	COUNTY	ROUTE	POST MILE TOTAL PROJECT	SHEET No.	TOTAL SHEETS
2	TEH	JF		29	138

REGISTERED CIVIL ENGINEER DATE

PLANS APPROVAL DATE

REGISTERED PROFESSIONAL ENGINEER K. BEWSEY No. 71485 Exp. 12/31/15 CIVIL STATE OF CALIFORNIA

T.Y. LIN INTERNATIONAL OR ITS OFFICERS OR AGENTS SHALL NOT BE RESPONSIBLE FOR THE ACCURACY OR COMPLETENESS OF ELECTRONIC COPIES OF THIS PLAN SHEET.

T·Y·LIN INTERNATIONAL
1601 RESPONSE ROAD, SUITE 260
SACRAMENTO, CA 95815

NOTES:

1. ALL STATIONING IS ALONG THE "R" LINE UNLESS OTHERWISE SPECIFIED.
2. SEE SHEET C-1 FOR NOTES AND LEGEND.

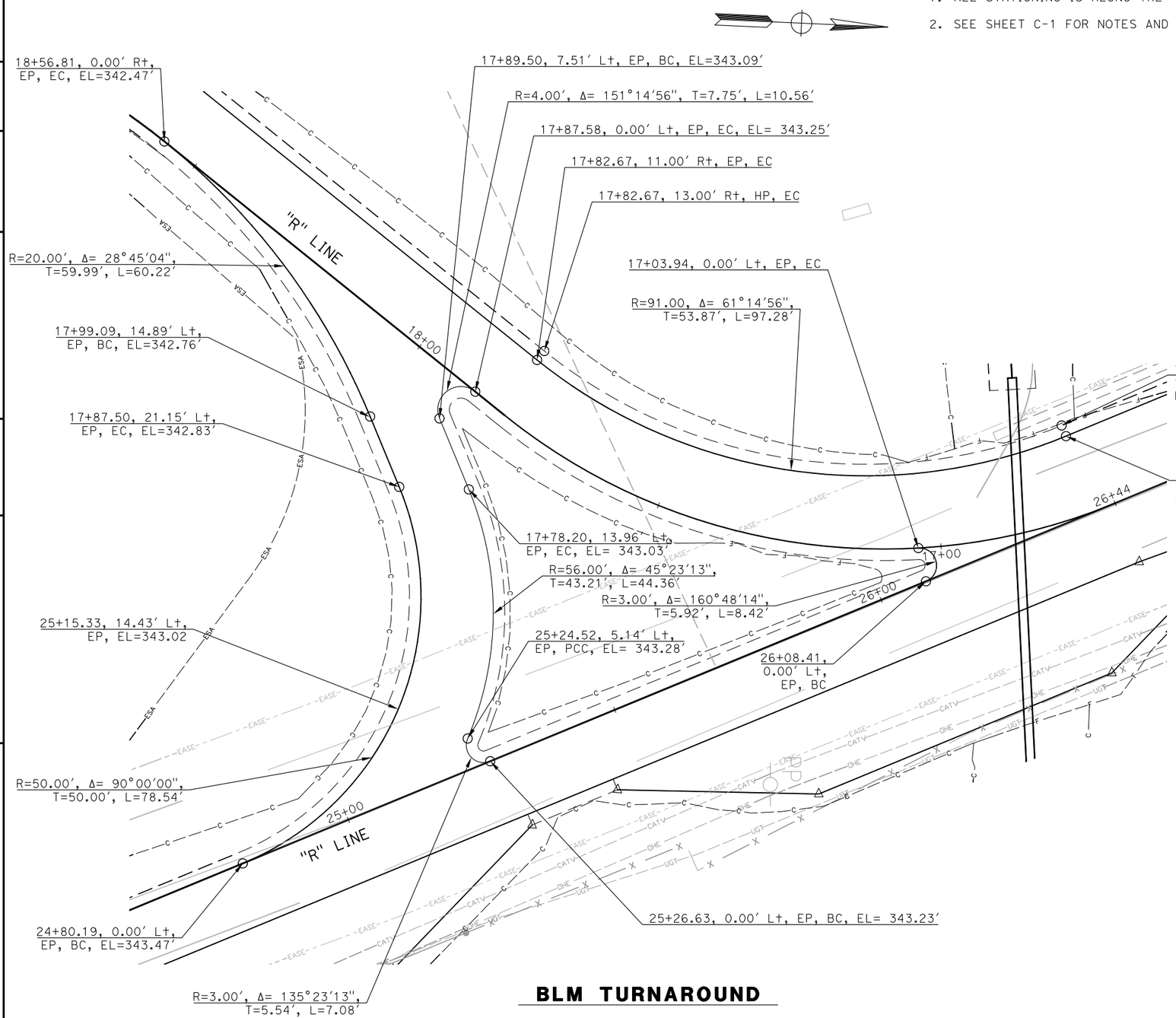

BLM TURNAROUND

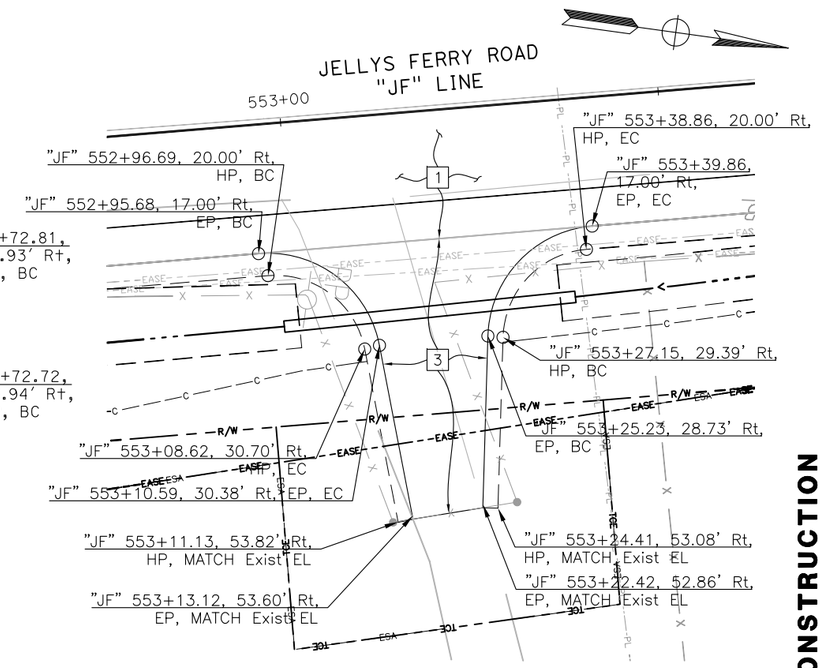

DRIVEWAY No. 5

CONSTRUCTION DETAILS

SCALE: 1"=10′

C-4

THIS PLAN ACCURATE FOR DRIVEWAY LAYOUT, PAVEMENT ELEVATIONS, AND MISCELLANEOUS DETAILS ONLY

65% SUBMITTAL, NOT FOR CONSTRUCTION

RELATIVE BORDER SCALE IS IN INCHES 0 1 2 3

REVISED BY	DATE REVISED

CALCULATED-DESIGNED BY: K. BEWSEY/ D. ZURCHER
CHECKED BY: KEITH RHODES
PROJECT ENGINEER: MICHAEL WOLOHAN

TEHAMA COUNTY DEPARTMENT OF PUBLIC WORKS
JELLYS FERRY IMPROVEMENT PROJECT

XRef List: | 054-BRDR | 054-C-RD | 054-X-TP | 054-Proposed ROW | 054-X-LANDNET | 054-X-UTIL | 054-Corridor | 054-Drainage |
Mar 20, 2015 - 01:27:02 DWG Name: P:\710054 - Jellys Ferry Bridge\500_Engineering\510_Civil\511_CADD\SHEETS\054-C.dwg Updated By: DZurcher

Dist.	COUNTY	ROUTE	POST MILE TOTAL PROJECT	SHEET No.	TOTAL SHEETS
2	TEH	JF		30	138

REGISTERED CIVIL ENGINEER DATE

PLANS APPROVAL DATE

REGISTERED PROFESSIONAL ENGINEER K. BEWSEY No. 71485 Exp. 12/31/15 CIVIL STATE OF CALIFORNIA

T.Y. LIN INTERNATIONAL OR ITS OFFICERS OR AGENTS SHALL NOT BE RESPONSIBLE FOR THE ACCURACY OR COMPLETENESS OF ELECTRONIC COPIES OF THIS PLAN SHEET.

T·Y·LIN INTERNATIONAL
1601 RESPONSE ROAD, SUITE 260
SACRAMENTO, CA 95815

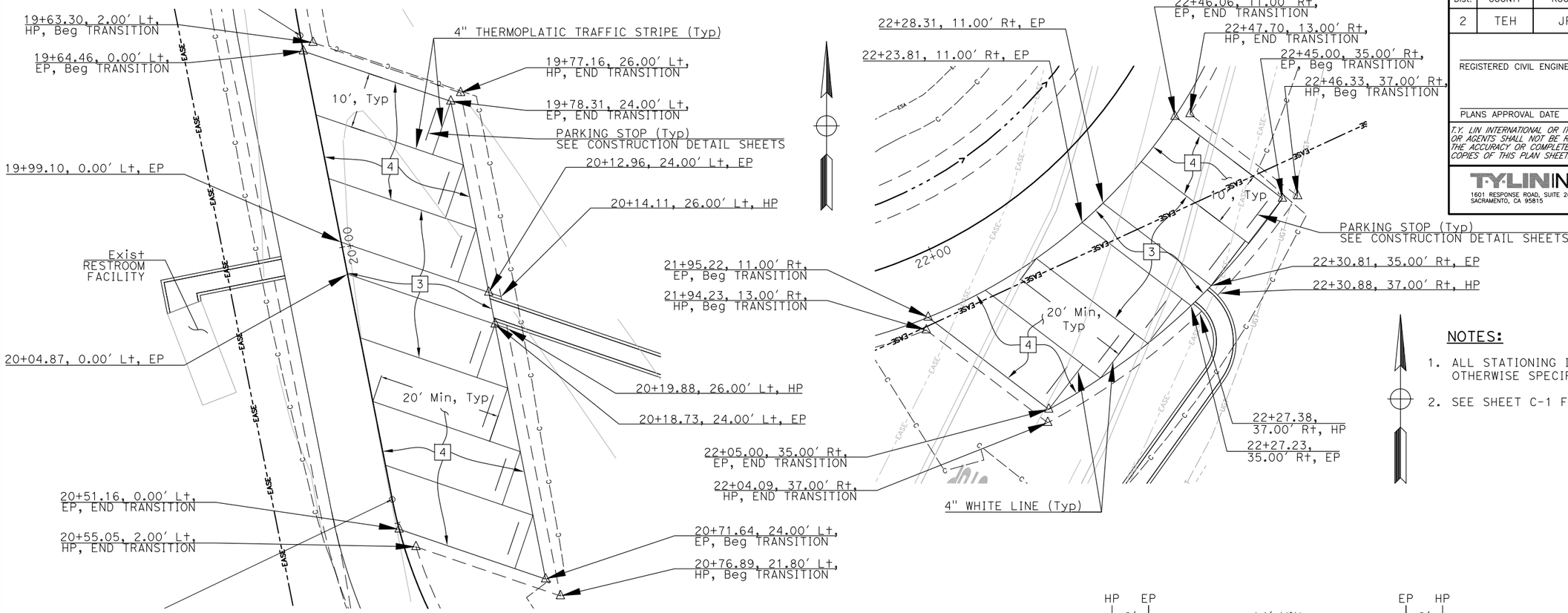

BLM PARKING AREAS

SCALE: 1"=10′

NOTES:

1. ALL STATIONING IS ALONG THE "R" LINE UNLESS OTHERWISE SPECIFIED.
2. SEE SHEET C-1 FOR NOTES AND LEGEND.

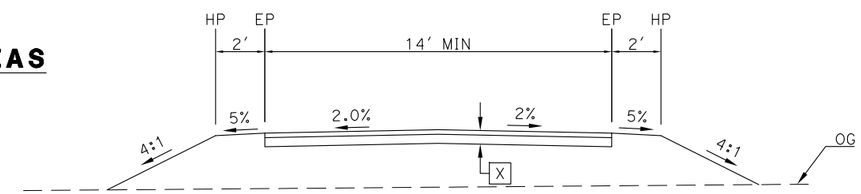

TYPICAL SECTION

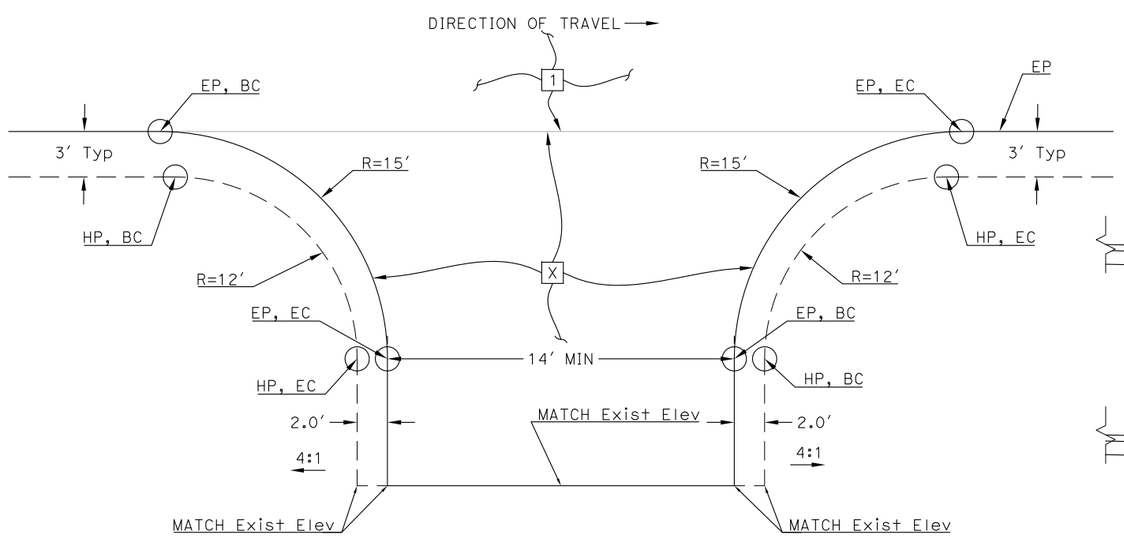

PLAN

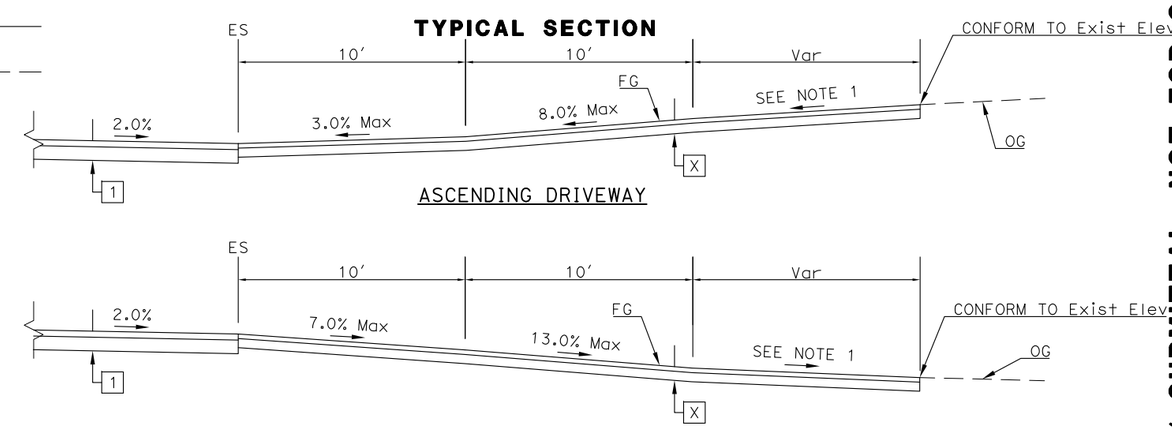

PROFILE

TYPICAL DRIVEWAY ENCROACHMENT WITH CULVERT

NO SCALE

THIS PLAN ACCURATE FOR DRIVEWAY LAYOUT, PAVEMENT ELEVATIONS, AND MISCELLANEOUS DETAILS ONLY

CONSTRUCTION DETAILS

65% SUBMITTAL, NOT FOR CONSTRUCTION

C-5

RELATIVE BORDER SCALE IS IN INCHES 0 1 2 3

REVISED BY	DATE REVISED

CALCULATED-DESIGNED BY	CHECKED BY
K. BEWSEY/ D. ZURCHER	KEITH RHODES

PROJECT ENGINEER: MICHAEL WOLOHAN

TEHAMA COUNTY DEPARTMENT OF PUBLIC WORKS

JELLYS FERRY IMPROVEMENT PROJECT

XRef List: | 054-BRDR | 054-C-RD | 054-X-TP | 054-Proposed ROW | 054-X-LANDNET | 054-X-UTIL | 054-Corridor | 054-Drainage |
Mar. 20, 2015 - 01:27:02 DWG Name: P:\710054 - Jellys Ferry Bridge\500_Engineering\510_Civil\511_CADD\SHEETS\054-C.dwg Updated By: DZurcher

Dist.	COUNTY	ROUTE	POST MILE TOTAL PROJECT	SHEET No.	TOTAL SHEETS
2	TEH	JF		31	138

REGISTERED CIVIL ENGINEER DATE

PLANS APPROVAL DATE

REGISTERED PROFESSIONAL ENGINEER K. BEWSEY No. 71485 Exp. 12/31/15 CIVIL STATE OF CALIFORNIA

T.Y. LIN INTERNATIONAL OR ITS OFFICERS OR AGENTS SHALL NOT BE RESPONSIBLE FOR THE ACCURACY OR COMPLETENESS OF ELECTRONIC COPIES OF THIS PLAN SHEET.

T·Y·LIN INTERNATIONAL
1601 RESPONSE ROAD, SUITE 260
SACRAMENTO, CA 95815

NOTES:

1. SEE SHEET C-1 FOR NOTES AND LEGEND.

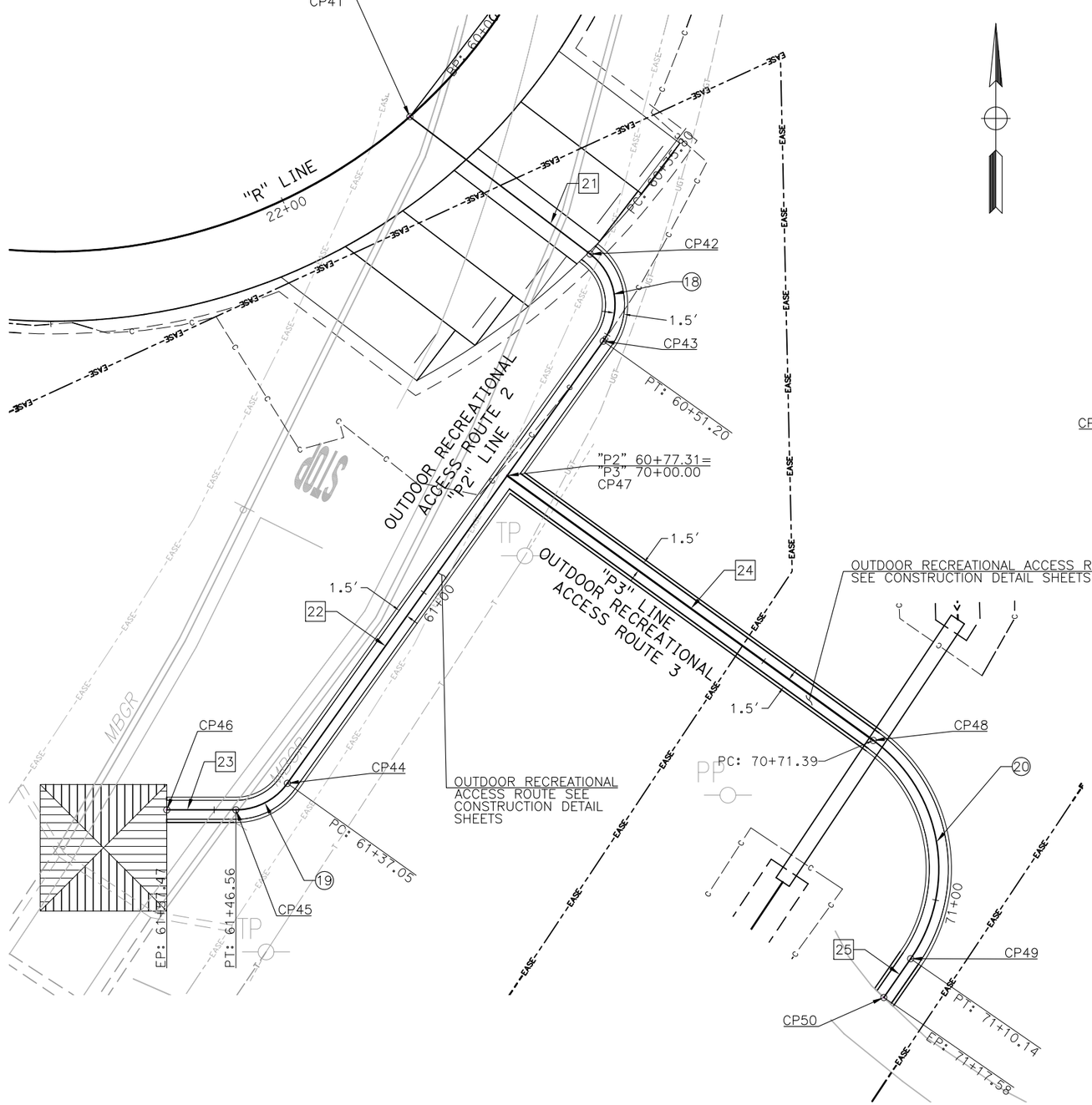

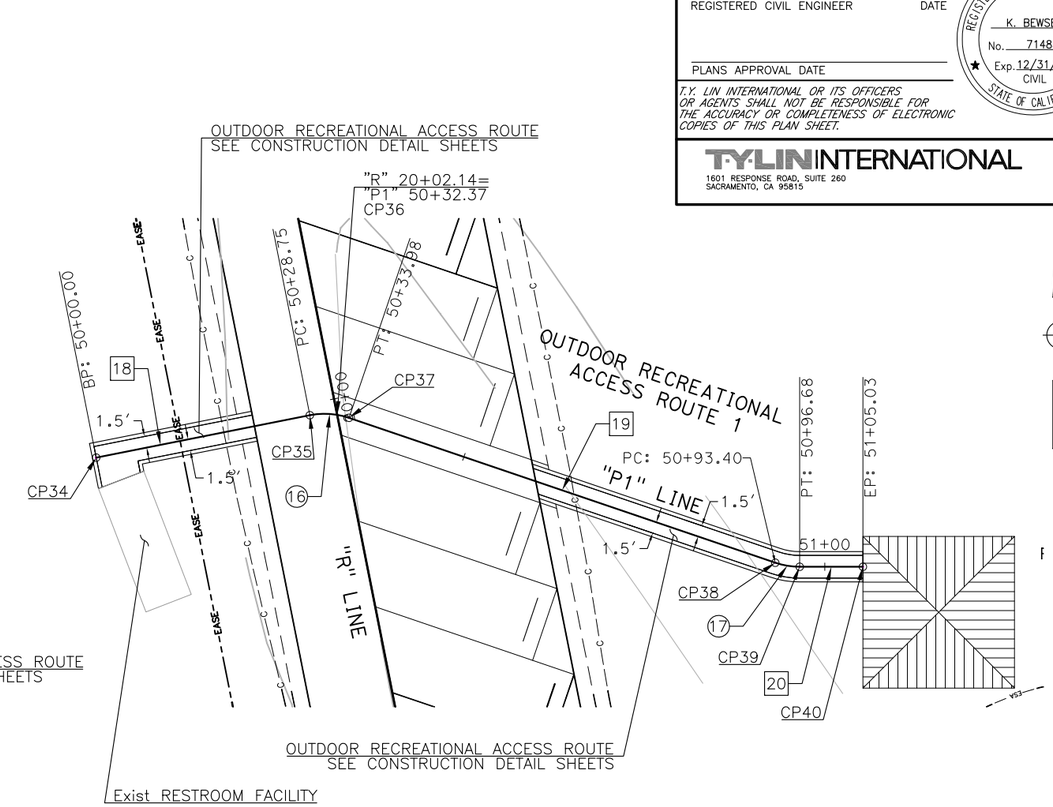

CALCULATED CONTROL POINTS			
No.	STATION	NORTHING	EASTING
CP34	BP "P1" 50+00.00	1999559.76	6508965.54
CP35	PC "P1" 50+28.75	1999565.36	6508993.73
CP36	"P1" 50+32.37	1999565.41	6508997.33
CP37	PT "P1" 50+33.98	1999565.02	6508998.90
CP38	PC "P1" 50+93.40	1999545.89	6509055.16
CP39	PT "P1" 50+96.68	1999545.36	6509058.38
CP40	EP "P1" 51+05.03	1999545.36	6509066.72
CP41	BP "P2" 60+00.00	1999475.53	6509145.51
CP42	PC "P2" 60+35.80	1999453.83	6509173.98
CP43	PT "P2" 60+51.20	1999440.06	6509176.05
CP44	PC "P2" 61+37.05	1999370.19	6509126.16
CP45	PT "P2" 61+46.56	1999366.01	6509118.02
CP46	EP "P2" 61+57.47	1999366.01	6509107.11
CP47	BP "P3" 70+00.00	1999418.81	6509160.88
CP48	PC "P3" 70+71.39	1999376.97	9509218.71
CP49	PT "P3" 71+10.14	1999342.48	6509224.62
CP50	EP "P3" 71+17.58	1999336.36	6509220.38

LINE TABLE		
No.	BEARING	DISTANCE
18	N 78° 46' 33" E	28.75
19	S 71° 13' 27" E	59.42
20	N 90° 00' 00" E	8.35
21	S 52° 40' 59" E	35.80
22	S 35° 31' 48" W	85.85
23	N 90° 00' 00" W	10.91
24	S 54° 07' 03" E	71.39
25	S 34° 41' 26" W	7.45

CURVE TABLE				
No.	R	Δ	T	L
16	10.00	30° 00' 00"	2.68	5.24
17	10.00	18° 46' 33"	1.65	3.28
18	10.00	88° 12' 46"	9.49	15.40
19	10.00	54° 28' 12"	5.15	9.51
20	25.00	88° 48' 29"	24.49	38.75

OUTDOOR RECREATIONAL ACCESS ROUTE LAYOUTS

NO SCALE

THIS PLAN ACCURATE FOR DRIVEWAY LAYOUT, PAVEMENT ELEVATIONS, AND MISCELLANEOUS DETAILS ONLY

CONSTRUCTION DETAILS

SCALE AS SHOWN

C-6

65% SUBMITTAL, NOT FOR CONSTRUCTION

REVISED BY	DATE REVISED

RELATIVE BORDER SCALE IS IN INCHES 0 1 2 3

CALCULATED-DESIGNED BY	K. BEWSEY/ D. ZURCHER
CHECKED BY	KEITH RHODES
PROJECT ENGINEER	MICHAEL WOLOHAN

TEHAMA COUNTY DEPARTMENT OF PUBLIC WORKS

JELLYS FERRY IMPROVEMENT PROJECT

XRef List: | 054-BRDR | 054-C-RD | 054-X-TP | 054-Proposed ROW | 054-X-LANDNET | 054-X-UTIL | 054-Corridor | 054-Drainage |
Mar. 20, 2015 - 01:27:02 DWG Name: P:\710054 - Jellys Ferry Bridge\500_Engineering\510_Civil\511_CADD\SHEETS\054-C.dwg Updated By: DZurcher

Dist.	COUNTY	ROUTE	POST MILE TOTAL PROJECT	SHEET No.	TOTAL SHEETS
2	TEH	JF		32	138

REGISTERED CIVIL ENGINEER DATE

PLANS APPROVAL DATE

REGISTERED PROFESSIONAL ENGINEER K. BEWSEY No. 71485 Exp. 12/31/15 CIVIL STATE OF CALIFORNIA

T.Y. LIN INTERNATIONAL OR ITS OFFICERS OR AGENTS SHALL NOT BE RESPONSIBLE FOR THE ACCURACY OR COMPLETENESS OF ELECTRONIC COPIES OF THIS PLAN SHEET.

T·Y·LIN INTERNATIONAL
1601 RESPONSE ROAD, SUITE 260
SACRAMENTO, CA 95815

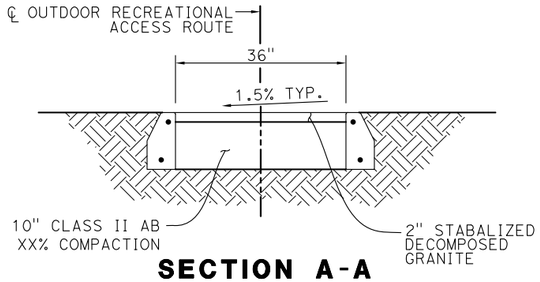

SECTION A-A
NO SCALE

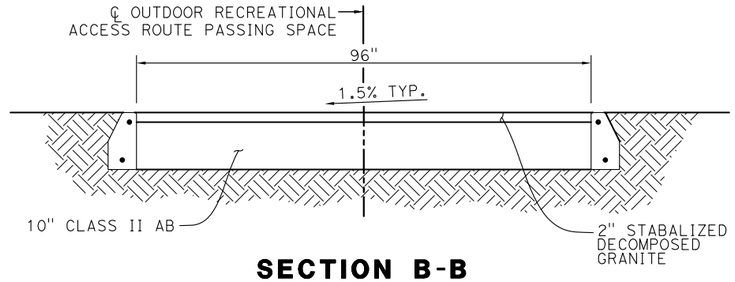

SECTION B-B
NO SCALE

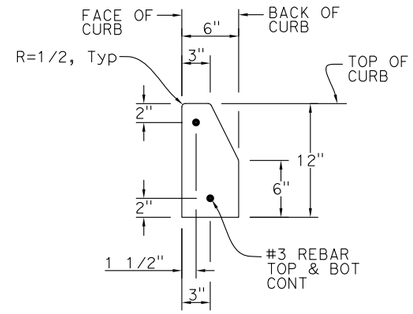

TYPICAL CURB DETAILS
NO SCALE

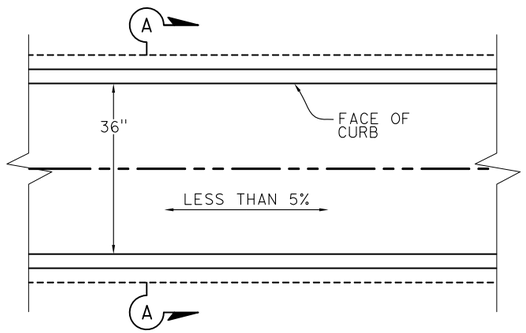

OUTDOOR RECREATIONAL ACCESS ROUTE
NO SCALE

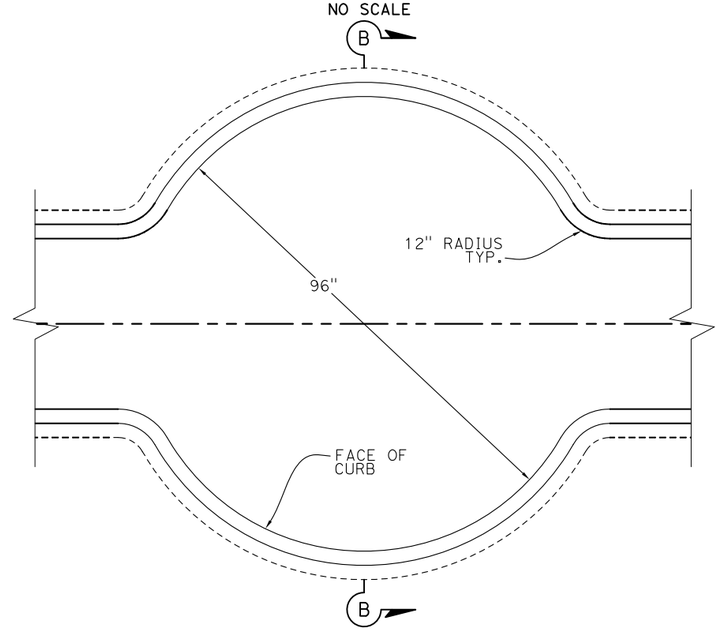

OUTDOOR RECREATIONAL ACCESS ROUTE PASSING SPACE
NO SCALE

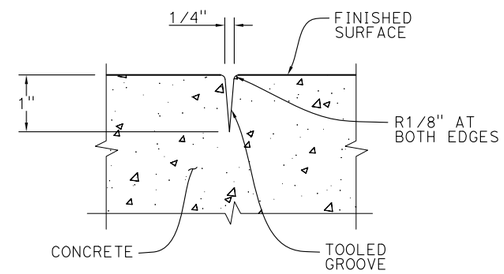

NOTE: CUSTOM FABRICATE GROOVING TOOL IF REQUIRED.

TOOLED CONTROL JOINT
NO SCALE

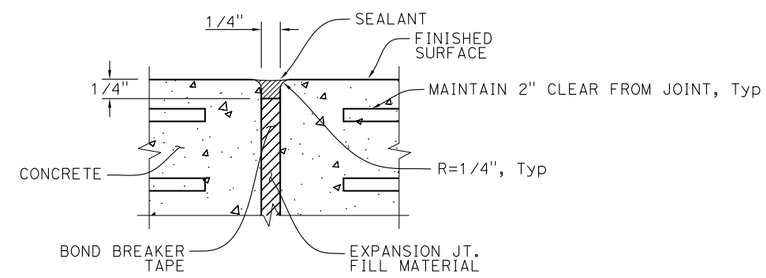

NOTE: BACKER ROD WILL NOT BE PERMITTED.

EXPANSION JOINT SEALANT
NOTE: BACKER ROD WILL NOT BE PERMITTED.
NO SCALE

NOTES:

1. PROVIDE PASSING SPACE EVERY 200 FT OR LESS.
2. PROVIDE EXPANSION JOINT EVERY 20 FT AND TOOLED CONTROL JOINTS SPACED EVENLY BETWEEN.

CONSTRUCTION DETAILS
SCALE AS SHOWN

C-7

65% SUBMITTAL, NOT FOR CONSTRUCTION

THIS PLAN ACCURATE FOR DRIVEWAY LAYOUT, PAVEMENT ELEVATIONS, AND MISCELLANEOUS DETAILS ONLY

RELATIVE BORDER SCALE IS IN INCHES 0 1 2 3

REVISED BY	DATE REVISED
K. BEWSEY/ D. ZURCHER	KEITH RHODES
CALCULATED-DESIGNED BY	CHECKED BY
PROJECT ENGINEER	MICHAEL WOLOHAN

TEHAMA COUNTY DEPARTMENT OF PUBLIC WORKS
JELLYS FERRY IMPROVEMENT PROJECT

XRef List: | 054-BRDR | 054-C-RD | 054-X-TP | 054-Proposed ROW | 054-X-LANDNET | 054-X-UTIL | 054-Corridor | 054-Drainage |
Mar. 20, 2015 - 01:27:02 DWG Name: P:\710054 - Jellys Ferry Bridge\500_Engineering\310_Civil\511_CADD\SHEETS\054-C.dwg Updated By: DZurcher

Dist.	COUNTY	ROUTE	POST MILE TOTAL PROJECT	SHEET No.	TOTAL SHEETS
2	TEH	JF		33	138

REGISTERED CIVIL ENGINEER DATE

PLANS APPROVAL DATE

REGISTERED PROFESSIONAL ENGINEER K. BEWSEY No. 71485 Exp. 12/31/15 CIVIL STATE OF CALIFORNIA

T.Y. LIN INTERNATIONAL OR ITS OFFICERS OR AGENTS SHALL NOT BE RESPONSIBLE FOR THE ACCURACY OR COMPLETENESS OF ELECTRONIC COPIES OF THIS PLAN SHEET.

T·Y·LIN INTERNATIONAL
1601 RESPONSE ROAD, SUITE 260
SACRAMENTO, CA 95815

NOTES:

1. ALL DIMENSIONS ARE IN FEET UNLESS OTHERWISE SHOWN.

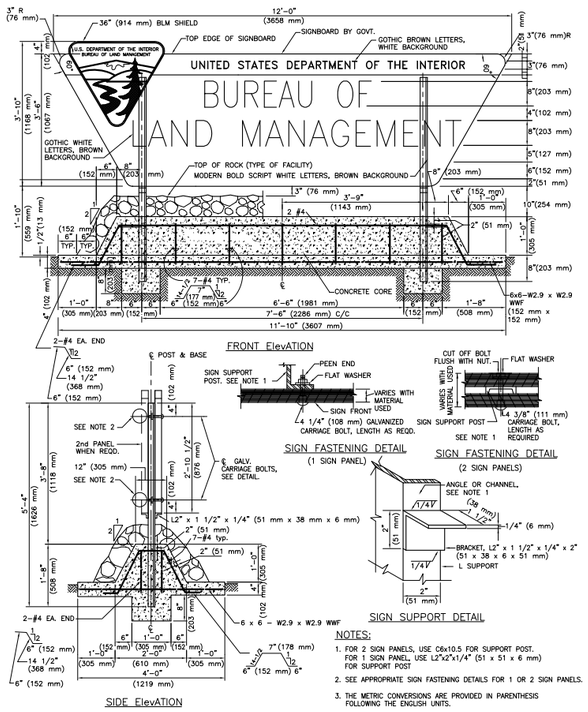

NOTES:

1. FOR 2 SIGN PANELS, USE C6x10.5 FOR SUPPORT POST. FOR 1 SIGN PANEL, USE L2"x2"x1/4" (51 x 51 x 6 mm) FOR SUPPORT POST
2. SEE APPROPRIATE SIGN FASTENING DETAILS FOR 1 OR 2 SIGN PANELS.
3. THE METRIC CONVERSIONS ARE PROVIDED IN PARENTHESIS FOLLOWING THE ENGLISH UNITS.

SIGN STRUCTURE "JELLYS FERRY"

NO SCALE

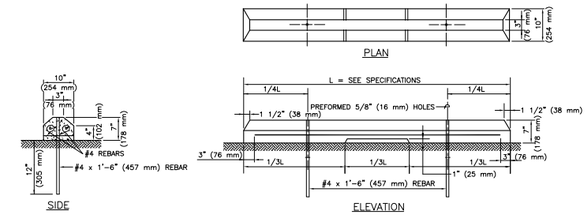

PARKING STOP

NO SCALE

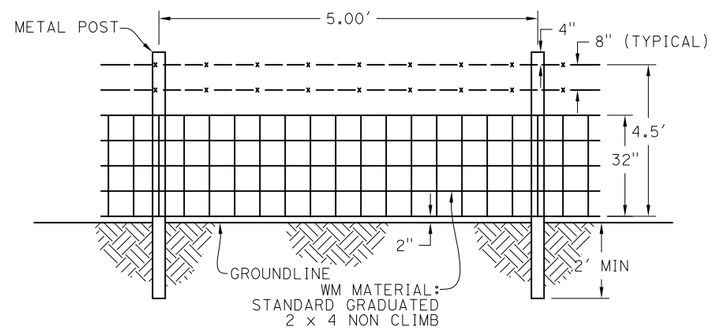

FENCE (TYPE WM)

NO SCALE

NOTES:

1. SEE STD PLAN A86 FOR WIRE MESH FENCE DETAILS NOT SHOWN HERE.

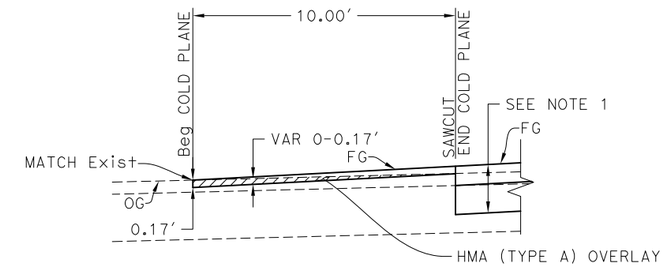

COLD PLANE AC PAVEMENT (CONFORM)

NO SCALE

NOTES:

1. PROVIDE NEAT VERTICAL EDGE AT Beg COLD PLANE.

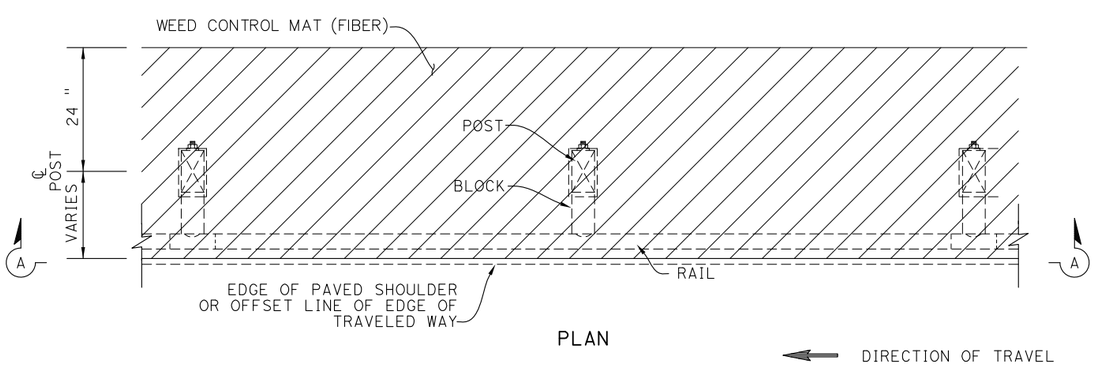

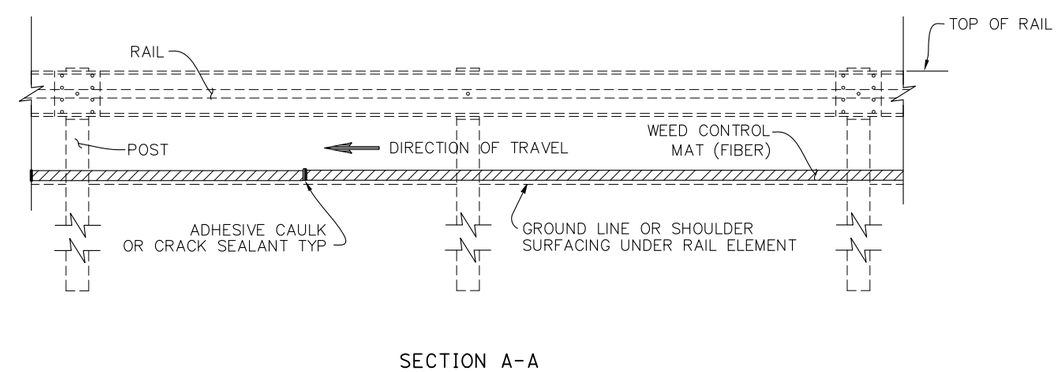

NOTES:

1. TRIM WEED CONTROL MAT FLUSH WITH EDGE OF SHOULDER, OR PAVEMENT.
2. APPLIES TO ALL LOCATIONS INCLUDING TRANSITIONS, TERMINAL SYSTEMS AND THE RECOMMENDED T-INTERSECTION SYSTEM.

WEED CONTROL MAT (FIBER)

NO SCALE

CONSTRUCTION DETAILS

SCALE AS SHOWN

C-8

65% SUBMITTAL, NOT FOR CONSTRUCTION

THIS PLAN ACCURATE FOR DRIVEWAY LAYOUT, PAVEMENT ELEVATIONS, AND MISCELLANEOUS DETAILS ONLY

RELATIVE BORDER SCALE IS IN INCHES 0 1 2 3

REVISED BY	DATE REVISED
K. BEWSEY/ D. ZURCHER	KEITH RHODES
CALCULATED-DESIGNED BY	CHECKED BY
PROJECT ENGINEER	MICHAEL WOLOHAN

TEHAMA COUNTY DEPARTMENT OF PUBLIC WORKS

JELLYS FERRY IMPROVEMENT PROJECT

XRef List: | 054-BRDR | 054-C-RD | 054-X-TP | 054-Proposed ROW | 054-X-LANDNET | 054-X-UTIL | 054-Corridor | 054-Drainage |
Mar. 20, 2015 - 01:27:02 DWG Name: P:\710054 - Jellys Ferry Bridge\500_Engineering\510_Civil\511_CADD\SHEETS\054-C.dwg Updated By: DZurcher

Dist.	COUNTY	ROUTE	POST MILE TOTAL PROJECT	SHEET No.	TOTAL SHEETS
2	TEH	JF		34	138

REGISTERED CIVIL ENGINEER DATE

PLANS APPROVAL DATE

REGISTERED PROFESSIONAL ENGINEER K. BEWSEY No. 71485 Exp. 12/31/15 CIVIL STATE OF CALIFORNIA

T.Y. LIN INTERNATIONAL OR ITS OFFICERS OR AGENTS SHALL NOT BE RESPONSIBLE FOR THE ACCURACY OR COMPLETENESS OF ELECTRONIC COPIES OF THIS PLAN SHEET.

T·Y·LIN INTERNATIONAL
1601 RESPONSE ROAD, SUITE 260
SACRAMENTO, CA 95815

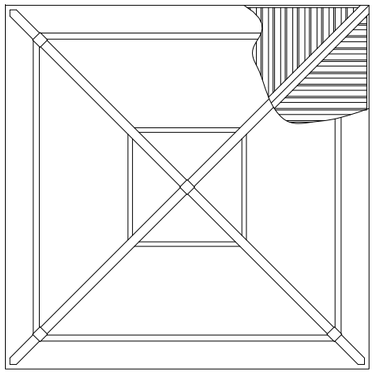

PLAN

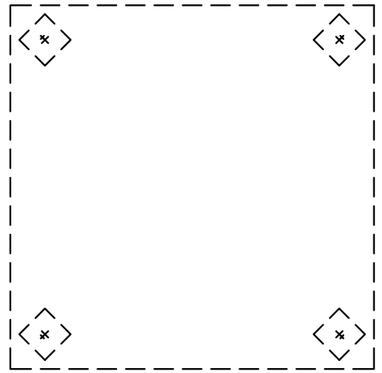

FOUNDATION LAYOUT

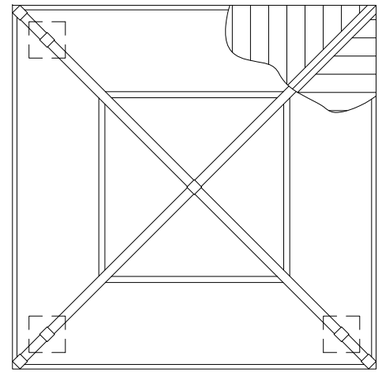

PLAN

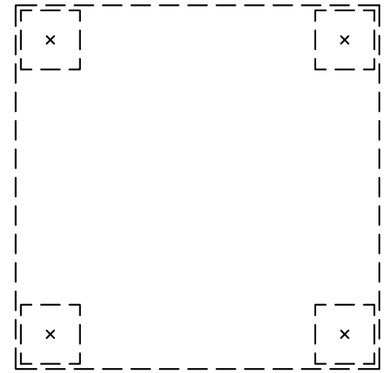

FOUNDATION LAYOUT

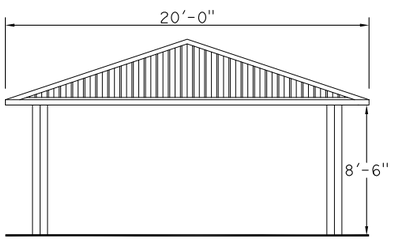

ELEVATION

SHADE STRUCTURE WITH EXPOSED COLUMNS

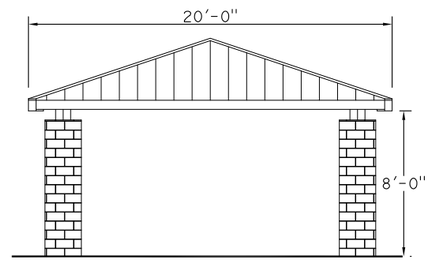

ELEVATION

SHADE STRUCTURE WITH CMU ENCLOSED STEEL COLUMNS

SHADE STRUCTURE (20' X 20') FOR ACCESSIBLE PICNIC UNIT

NO SCALE

NOTES:

1. 2 PICNIC TABLE UNITS PER ACCESSIBLE PICNIC UNIT.
2. 1 GRILL UNIT PER ACCESSIBLE PICNIC UNIT.

DETAIL TO BE PROVIDED WITH 90% PLANS SHOWING LAYOUT OF ACCESSIBLE PICNIC TABLE AND GRILL UNIT

ACCESSIBLE PICNIC UNIT

NO SCALE

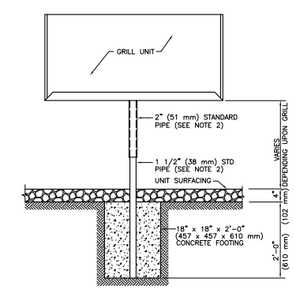

MOUNTING DETAIL

NOTES:

1. SEE SPECIFICATIONS FOR TYPE OF GRILL & UNIT SURFACING TO BE USED.
2. FOR SOME MODELS PIPE DIAMETER MAY VARY AND ONLY ONE PIPE WILL BE USED TO CONNECT GRILL TO THE FOOTING.
3. THE METRIC CONVERSIONS ARE PROVIDED IN PARENTHESIS FOLLOWING THE ENGLISH UNITS.

ACCESSIBLE GRILL UNIT

NO SCALE

THIS PLAN ACCURATE FOR DRIVEWAY LAYOUT, PAVEMENT ELEVATIONS, AND MISCELLANEOUS DETAILS ONLY

CONSTRUCTION DETAILS

SCALE AS SHOWN

C-9

65% SUBMITTAL, NOT FOR CONSTRUCTION

RELATIVE BORDER SCALE IS IN INCHES 0 1 2 3

REVISED BY	DATE REVISED

CALCULATED-DESIGNED BY	K. BEWSEY/ D. ZURCHER
CHECKED BY	KEITH RHODES
PROJECT ENGINEER	MICHAEL WOLOHAN

TEHAMA COUNTY DEPARTMENT OF PUBLIC WORKS

JELLYS FERRY IMPROVEMENT PROJECT

XRef List: | 054-BRDR | 054-C-RD | 054-X-TP | 054-Proposed ROW | 054-X-LANDNET | 054-X-UTIL | 054-Corridor | 054-Drainage |
Mar 20, 2015 - 01:27:02 DWG Name: P:\710054 - Jellys Ferry Bridge\500_Engineering\510_Civil\511_CADD\SHEETS\054-C.dwg Updated By: DZurcher

Dist.	COUNTY	ROUTE	POST MILE TOTAL PROJECT	SHEET No.	TOTAL SHEETS
2	TEH	JF		35	138

REGISTERED CIVIL ENGINEER DATE

PLANS APPROVAL DATE

REGISTERED PROFESSIONAL ENGINEER K. BEWSEY No. 71485 Exp. 12/31/15 CIVIL STATE OF CALIFORNIA

T.Y. LIN INTERNATIONAL OR ITS OFFICERS OR AGENTS SHALL NOT BE RESPONSIBLE FOR THE ACCURACY OR COMPLETENESS OF ELECTRONIC COPIES OF THIS PLAN SHEET.

T·Y·LIN INTERNATIONAL
1601 RESPONSE ROAD, SUITE 260
SACRAMENTO, CA 95815

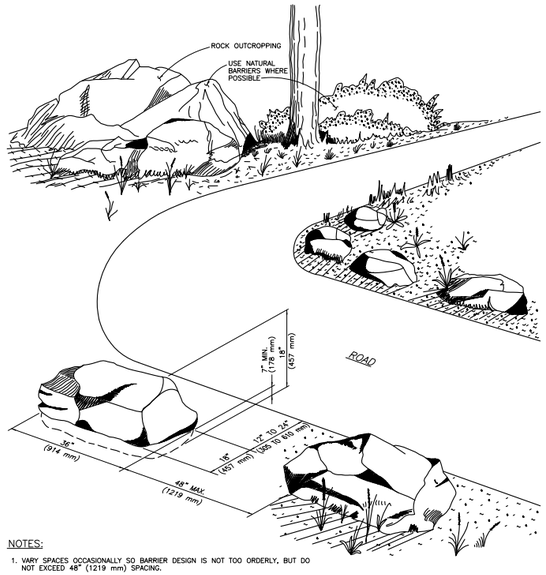

NOTES:

1. VARY SPACES OCCASIONALLY SO BARRIER DESIGN IS NOT TOO ORDERLY, BUT DO NOT EXCEED 48" (1219 mm) SPACING.
2. THE IDEAL ROCK SIZE SHALL BE 18" x 18" x 36" (457 x 457 x 914 mm) AT A MINIMUM WEIGHT OF 400 LBS. (180 kg); OTHER SIZES SHALL BE AS SPECIFIED.
3. PLACE ROCK WITH WEATHERED SIDE EXPOSED.
4. THE METRIC CONVERSIONS ARE PROVIDED IN PARENTHESIS FOLLOWING THE ENGLISH UNITS.

ROCK BARRIER
NO SCALE

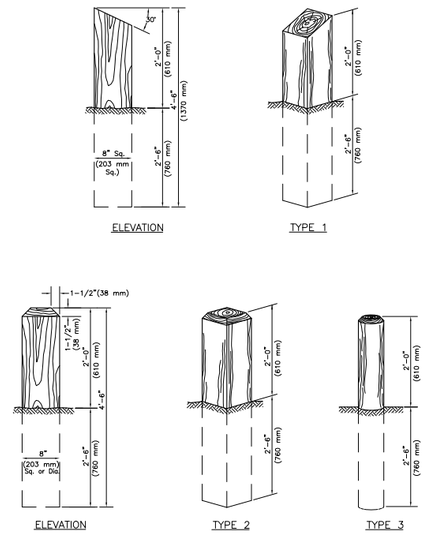

NOTE:

1. THE METRIC CONVERSIONS ARE PROVIDED IN PARENTHESIS FOLLOWING THE ENGLISH UNITS.

WOOD GUARD POSTS
NO SCALE

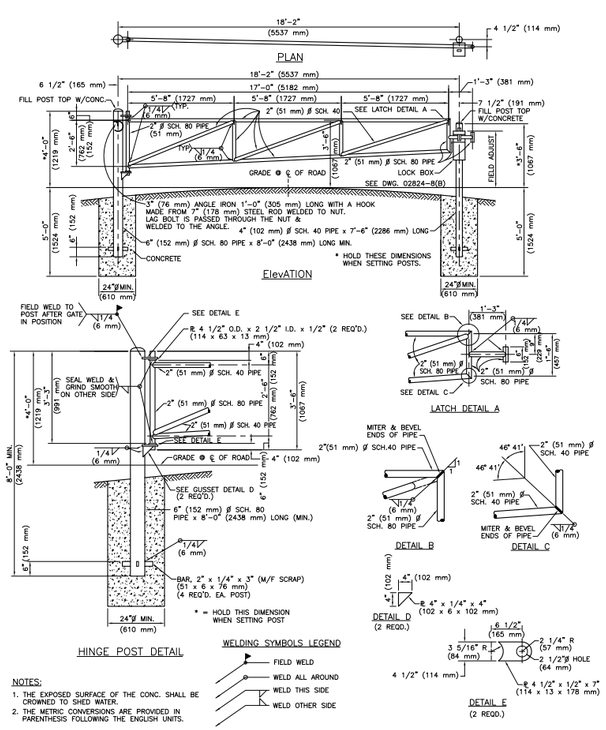

NOTES:

1. THE EXPOSED SURFACE OF THE CONC. SHALL BE CROWNED TO SHED WATER.
2. THE METRIC CONVERSIONS ARE PROVIDED IN PARENTHESIS FOLLOWING THE ENGLISH UNITS.

STEEL PIPE GATE
NO SCALE

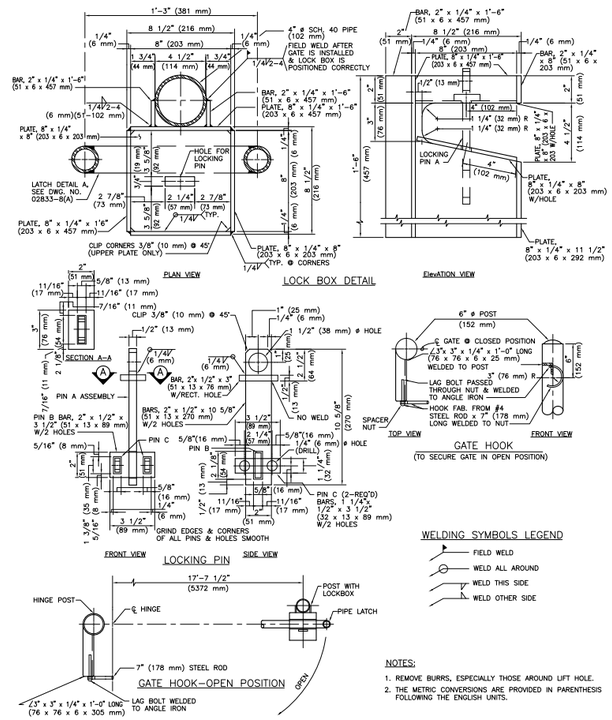

NOTES:

1. REMOVE BURRS, ESPECIALLY THOSE AROUND LIFT HOLE.
2. THE METRIC CONVERSIONS ARE PROVIDED IN PARENTHESIS FOLLOWING THE ENGLISH UNITS.

STEEL PIPE GATE LOCKBOX AND LOCKING PINS
NO SCALE

THIS PLAN ACCURATE FOR DRIVEWAY LAYOUT, PAVEMENT ELEVATIONS, AND MISCELLANEOUS DETAILS ONLY

DETAIL TO BE PROVIDED WITH 90% PLANS

ACCESSIBLE PICNIC TABLE
NO SCALE

CONSTRUCTION DETAILS
SCALE AS SHOWN

C-10

65% SUBMITTAL, NOT FOR CONSTRUCTION

CALCULATED-DESIGNED BY	K. BEWSEY/ D. ZURCHER
CHECKED BY	KEITH RHODES
REVISED BY	
DATE REVISED	

RELATIVE BORDER SCALE IS IN INCHES 0 1 2 3

PROJECT ENGINEER: MICHAEL WOLOHAN

TEHAMA COUNTY DEPARTMENT OF PUBLIC WORKS

JELLYS FERRY IMPROVEMENT PROJECT

XRef List: | 054-BRDR | 054-C-RD | 054-X-TP | 054-Proposed ROW | 054-X-LANDNET | 054-X-UTIL | 054-Corridor | 054-Drainage |
Mar 20, 2015 - 01:27:02 DWG Name: P:\710054 - Jellys Ferry Bridge\500_Engineering\510_Civil\511_CADD\SHEETS\054-C.dwg Updated By: DZurcher

Dist.	COUNTY	ROUTE	POST MILE TOTAL PROJECT	SHEET No.	TOTAL SHEETS
2	TEH	JF		36	138

REGISTERED CIVIL ENGINEER DATE

PLANS APPROVAL DATE

REGISTERED PROFESSIONAL ENGINEER K. BEWSEY No. 71485 Exp. 12/31/15 CIVIL STATE OF CALIFORNIA

T.Y. LIN INTERNATIONAL OR ITS OFFICERS OR AGENTS SHALL NOT BE RESPONSIBLE FOR THE ACCURACY OR COMPLETENESS OF ELECTRONIC COPIES OF THIS PLAN SHEET.

T·Y·LIN INTERNATIONAL
1601 RESPONSE ROAD, SUITE 260
SACRAMENTO, CA 95815

NOTES:

1. ALL DIMENSIONS ARE IN FEET UNLESS OTHERWISE SHOWN.
2. FOR COMPLETE RIGHT OF WAY, SEE RIGHT OF WAY RECORD MAPS AT TEHAMA COUNTY.
3. ALL STATIONING IS ALONG THE "JF" LINE UNLESS OTHERWISE SPECIFIED.

LEGEND

- HINGE
- FILL
- CUT
- RIGHT OF WAY
- TEMPORARY CONSTRUCTION EASEMENT
- ORDINARY HIGH WATER MARK, JURISDICTIONAL LIMIT
- RETAINING WALL
- METAL BEAM GUARD RAIL
- RSP LIMITS
- RETAINING WALL RSP EXCAVATION LIMITS
- LOCAL BORROW BASIN (SEE SHEET CG-6)

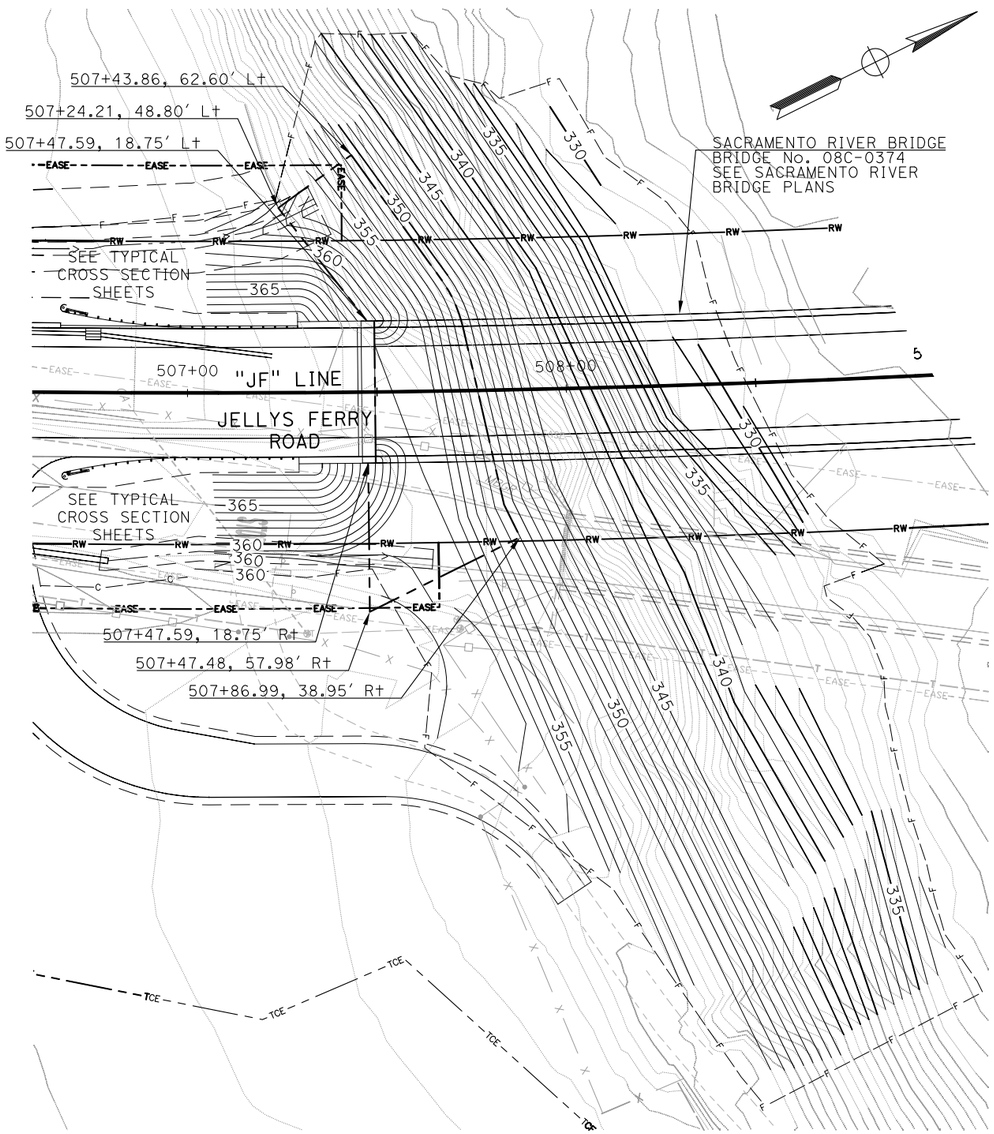

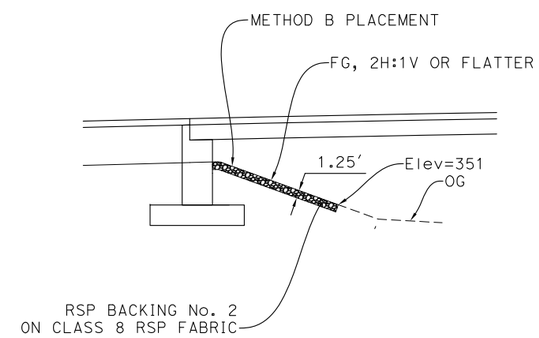

SACRAMENTO RIVER BRIDGE - ABUTMENT 1
SLOPE PROTECTION
NTS

SACRAMENTO RIVER BRIDGE
ABUTMENT 1

CONTOUR GRADING
SCALE 1"=20'

G-1

65% SUBMITTAL, NOT FOR CONSTRUCTION

THIS PLAN ACCURATE FOR CONTOUR GRADING AND SLOPE PROTECTION WORK ONLY

REVISED BY	DATE REVISED

RELATIVE BORDER SCALE IS IN INCHES 0 1 2 3

CALCULATED-DESIGNED BY	CHECKED BY
K. BEWSEY/ D. ZURCHER	KEITH RHODES

PROJECT ENGINEER: MICHAEL WOLOHAN

TEHAMA COUNTY DEPARTMENT OF PUBLIC WORKS
JELLYS FERRY IMPROVEMENT PROJECT

XRef List: | 054-BRDR | 054-X-TP | 054-X-UTIL | 054-X-LANDNET | 054-Proposed ROW | 054-CG-D | 054-C-RD | 054-Corridor | 054-Drainage | 054-ENV |
Mar. 20, 2015 - 09:43:14 DWG Name: P:\710\054 - Jellys Ferry Bridge\500_Engineering\510_Civil\51_CADD\SHEETS\054-G.dwg Updated By: DZurcher

Dist.	COUNTY	ROUTE	POST MILE TOTAL PROJECT	SHEET No.	TOTAL SHEETS
2	TEH	JF		37	138

REGISTERED CIVIL ENGINEER DATE

PLANS APPROVAL DATE

REGISTERED PROFESSIONAL ENGINEER K. BEWSEY No. 71485 Exp. 12/31/15 CIVIL STATE OF CALIFORNIA

T.Y. LIN INTERNATIONAL OR ITS OFFICERS OR AGENTS SHALL NOT BE RESPONSIBLE FOR THE ACCURACY OR COMPLETENESS OF ELECTRONIC COPIES OF THIS PLAN SHEET.

T·Y·LIN INTERNATIONAL
1601 RESPONSE ROAD, SUITE 260
SACRAMENTO, CA 95815

NOTES:

1. SEE SHEET CG-1 FOR GENERAL NOTES AND LEGEND

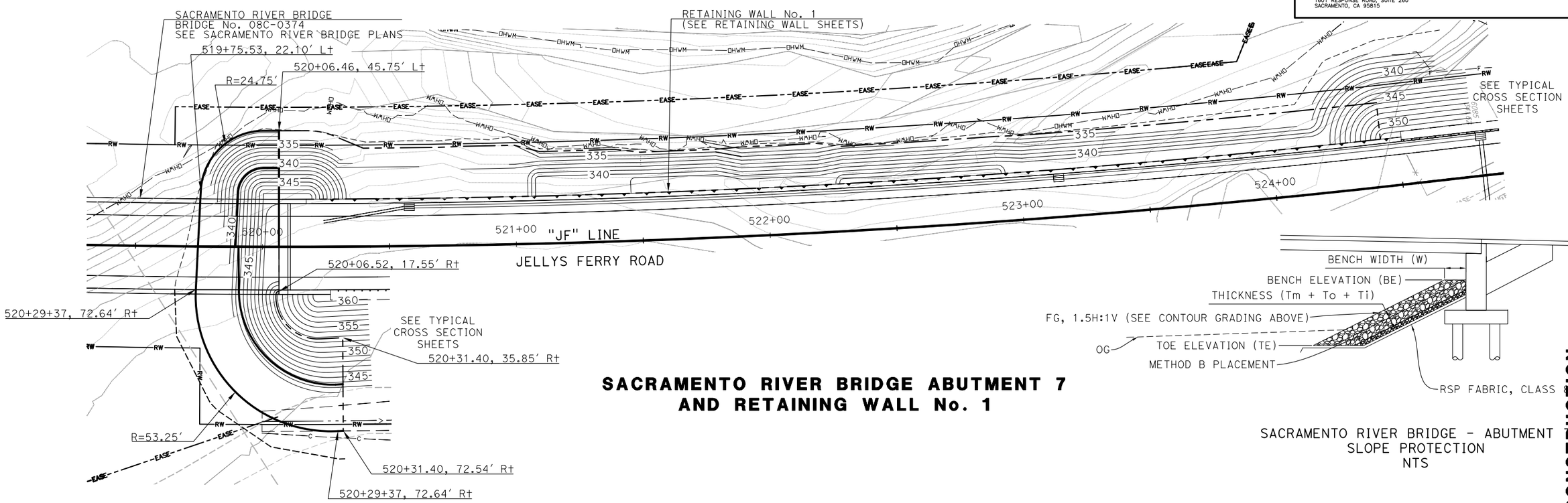

SACRAMENTO RIVER BRIDGE ABUTMENT 7 AND RETAINING WALL No. 1

SACRAMENTO RIVER BRIDGE - ABUTMENT
SLOPE PROTECTION
NTS

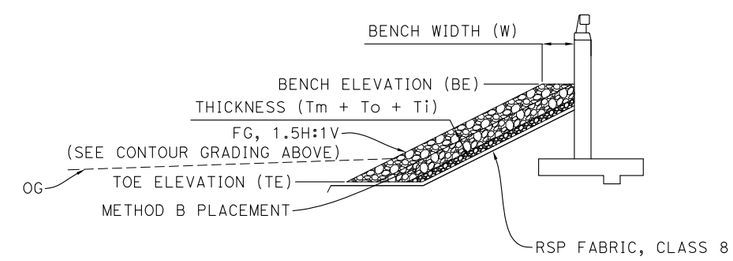

RETAINING WALL No. 1
SLOPE PROTECTION
NTS

COUNTOUR GRADING AND RSP DATA

GRADING LOCATION	BE (FT)	W (FT)	TE (FT)	Tm (FT)	To (FT)	Tm & To RSP CLASS	Ti (FT)	Ti RSP CLASS	SLOPE (XH:1V)
ABUT 7 "JF" 520+06 TO 520+31, RT	350.15	0.00	331.50	3	4.3	1/2 T	1.8	FACING	1.5
ABUT 7 ALONG RIGHT EDGE OF DECK	350.15	0.00	331.50	3	4.3	1/2 T	1.8	FACING	1.5
ABUT 7 ALONG LEFT EDGE OF DECK	348.87	4.75	331.50	2.75	4.3	1/2 T	1.8	FACING	1.5
RW - "JF" 520+10 to 520+30	343.00	9.87	330.00	2.5	4.3	1/2 T	1.8	FACING	1.5
RW - "JF" 520+40 to 520+70	338.50	11.75	333.00	3.47	1.8	FACING	0	-	1.5
RW - "JF" 520+80 to 521+00	338.50	10.50	332.00	3.47	1.8	FACING	0	-	1.5
RW - "JF" 521+10 to 521+40	340.00	7.75	333.50	3.61	1.8	FACING	0	-	1.5
RW - "JF" 521+50 to 521+80	341.79	4.82	334.29	3.47	1.8	FACING	0	-	1.5
RW - "JF" 521+90 to 522+91	341.39	3.15	332.39	2.22	1.8	FACING	0	-	1.5
RW - "JF" 523+01 to 524+11	343.48	1.29	334.48	3.34	1.8	FACING	0	-	1.5
RW - "JF" 524+40 to 524+51.3	343.48	1.29	334.48	3.34	1.8	FACING	0	-	1.5

NOTES:

1. FOR RSP, PROVIDE A LINEAR TRANSITION BETWEEN DEFINED RANGES DESCRIBED ABOVE.

THIS PLAN ACCURATE FOR CONTOUR GRADING AND SLOPE PROTECTION WORK ONLY

CONTOUR GRADING

SCALE 1"=20'

G-2

65% SUBMITTAL, NOT FOR CONSTRUCTION

REVISED BY	DATE REVISED

RELATIVE BORDER SCALE IS IN INCHES 0 1 2 3

CALCULATED-DESIGNED BY	CHECKED BY
K. BEWSEY/ D. ZURCHER	KEITH RHODES

PROJECT ENGINEER: MICHAEL WOLOHAN

TEHAMA COUNTY DEPARTMENT OF PUBLIC WORKS

JELLYS FERRY IMPROVEMENT PROJECT

XRef List: | 054-BRDR | 054-X-TP | 054-X-UTIL | 054-X-LANDNET | 054-Proposed ROW | 054-CG-D | 054-C-RD | 054-Corridor | 054-Drainage | 054-ENV |
Mar. 20, 2015 - 09:43:14 DWG Name: P:\710054 - Jellys Ferry Bridge\500_Engineering\510_Civil\511_CADD\SHEETS\054-G.dwg Updated By: DZurcher

Dist.	COUNTY	ROUTE	POST MILE TOTAL PROJECT	SHEET No.	TOTAL SHEETS
2	TEH	JF		38	138

REGISTERED CIVIL ENGINEER DATE

PLANS APPROVAL DATE

REGISTERED PROFESSIONAL ENGINEER K. BEWSEY No. 71485 Exp. 12/31/15 CIVIL STATE OF CALIFORNIA

T.Y. LIN INTERNATIONAL OR ITS OFFICERS OR AGENTS SHALL NOT BE RESPONSIBLE FOR THE ACCURACY OR COMPLETENESS OF ELECTRONIC COPIES OF THIS PLAN SHEET.

T·Y·LIN INTERNATIONAL
1601 RESPONSE ROAD, SUITE 260
SACRAMENTO, CA 95815

NOTES:

1. SEE SHEET CG-1 FOR NOTES & LEGEND.

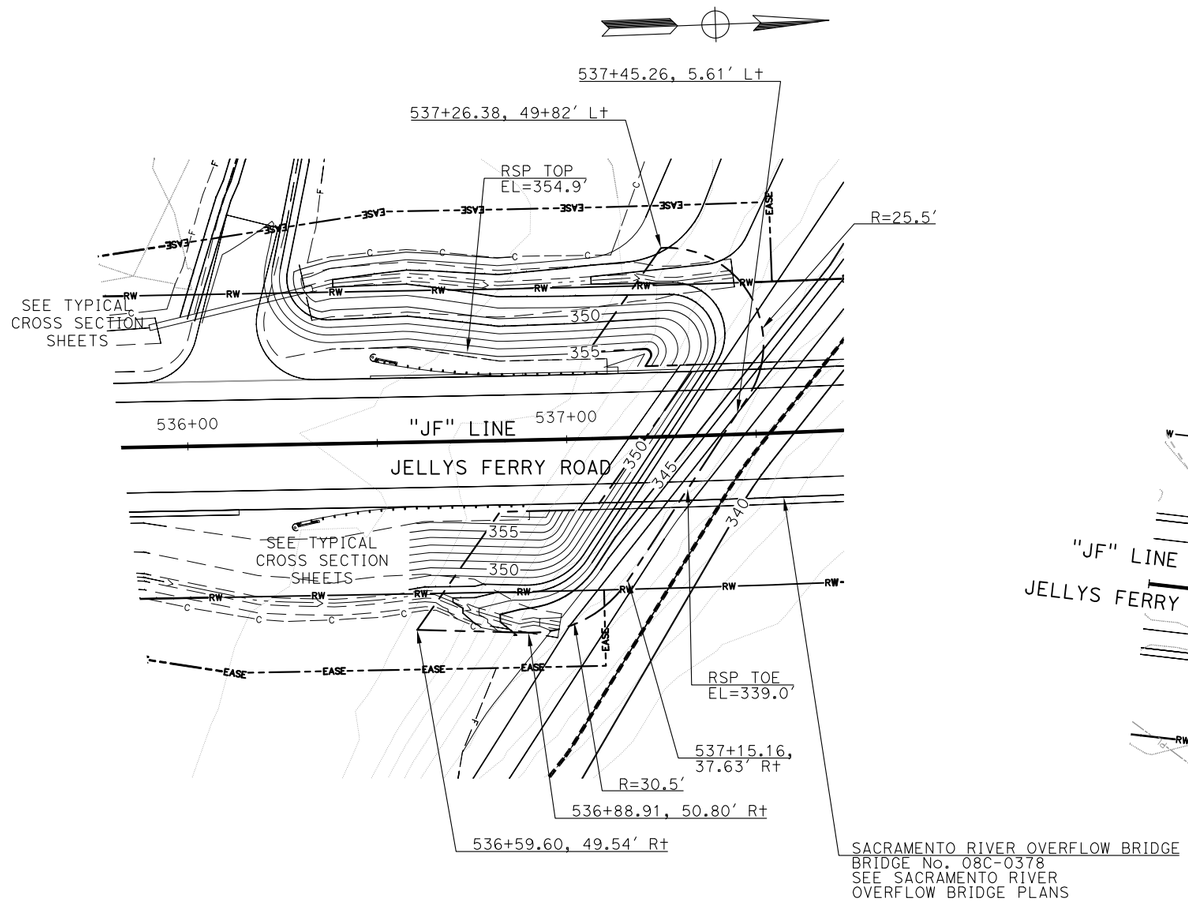

SACRAMENTO RIVER OVERFLOW BRIDGE ABUTMENT 1

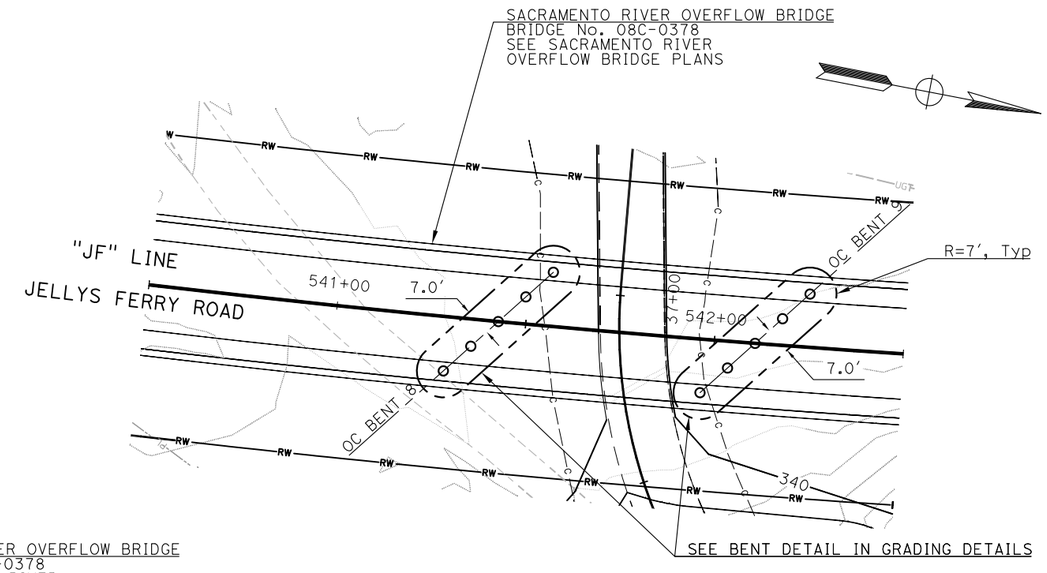

SACRAMENTO RIVER OVERFLOW BRIDGE BENT 8&9

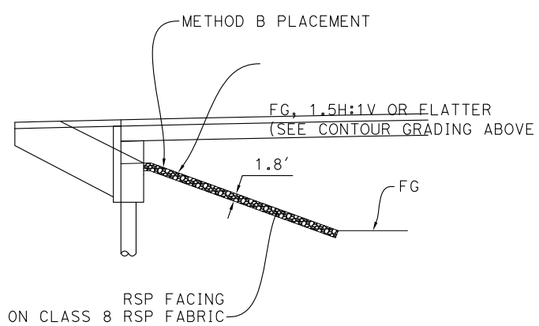

SACRAMENTO RIVER OVERFLOW BRIDGE - ABUTMENT 1
SLOPE PROTECTION
NTS

THIS PLAN ACCURATE FOR CONTOUR GRADING AND SLOPE PROTECTION WORK ONLY

CONTOUR GRADING
SCALE 1"=20'
G-3

65% SUBMITTAL, NOT FOR CONSTRUCTION

RELATIVE BORDER SCALE IS IN INCHES 0 1 2 3

REVISED BY	DATE REVISED

CALCULATED-DESIGNED BY	CHECKED BY
K. BEWSEY/ D. ZURCHER	KEITH RHODES

PROJECT ENGINEER: MICHAEL WOLOHAN

TEHAMA COUNTY DEPARTMENT OF PUBLIC WORKS
JELLYS FERRY IMPROVEMENT PROJECT

XRef List: | 054-BRDR | 054-X-TP | 054-X-UTIL | 054-X-LANDNET | 054-Proposed ROW | 054-CG-D | 054-C-RD | 054-Corridor | 054-Drainage | 054-Drainage | 054-
Mar. 20, 2015 - 09:43:14 DWG Name: P:\710054 - Jellys Ferry Bridge\500_Engineering\510_Civil\511_CADD\SHEETS\054-G.dwg Updated By: DZurcher

Dist.	COUNTY	ROUTE	POST MILE TOTAL PROJECT	SHEET No.	TOTAL SHEETS
2	TEH	JF		39	138

REGISTERED CIVIL ENGINEER DATE

PLANS APPROVAL DATE

REGISTERED PROFESSIONAL ENGINEER K. BEWSEY No. 71485 Exp. 12/31/15 CIVIL STATE OF CALIFORNIA

T.Y. LIN INTERNATIONAL OR ITS OFFICERS OR AGENTS SHALL NOT BE RESPONSIBLE FOR THE ACCURACY OR COMPLETENESS OF ELECTRONIC COPIES OF THIS PLAN SHEET.

T·Y·LIN INTERNATIONAL
1601 RESPONSE ROAD, SUITE 260
SACRAMENTO, CA 95815

NOTES:

1. SEE SHEET CG-1 FOR NOTES & LEGEND.

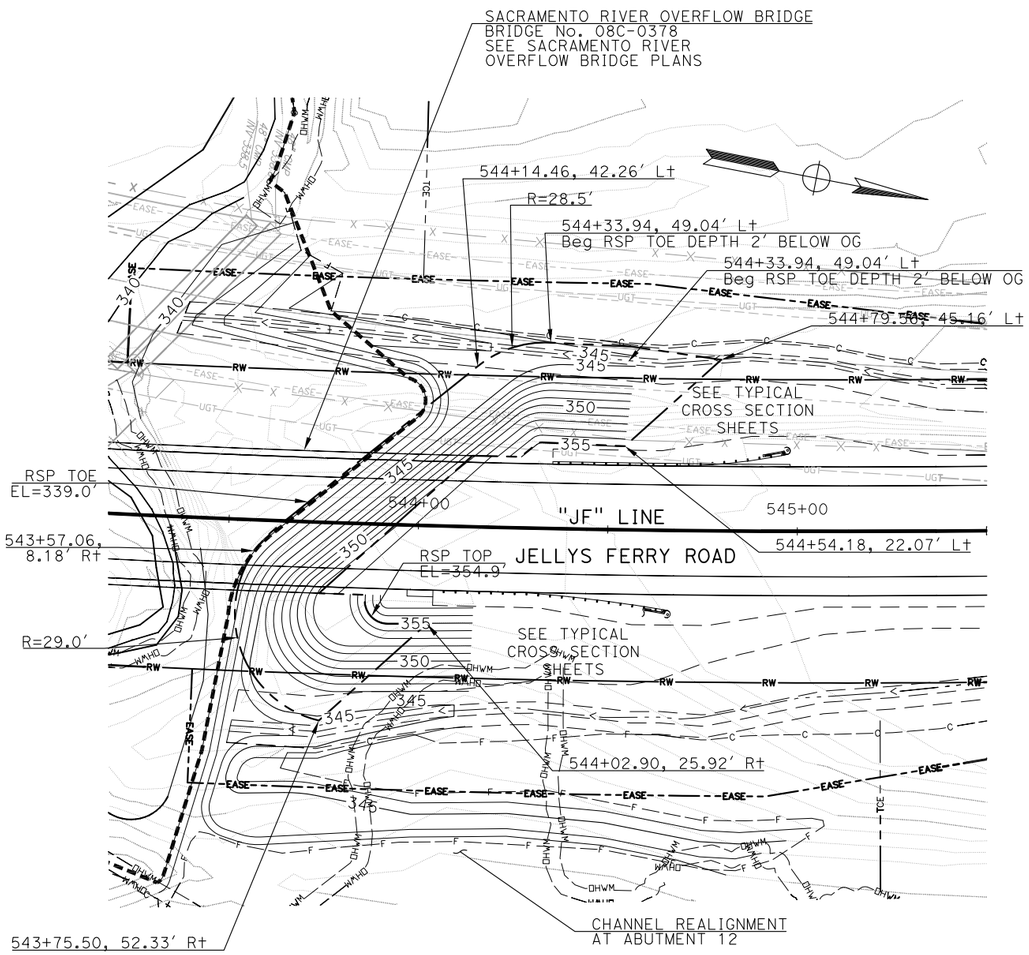

SACRAMENTO RIVER OVERFLOW BRIDGE - ABUTMENT 12

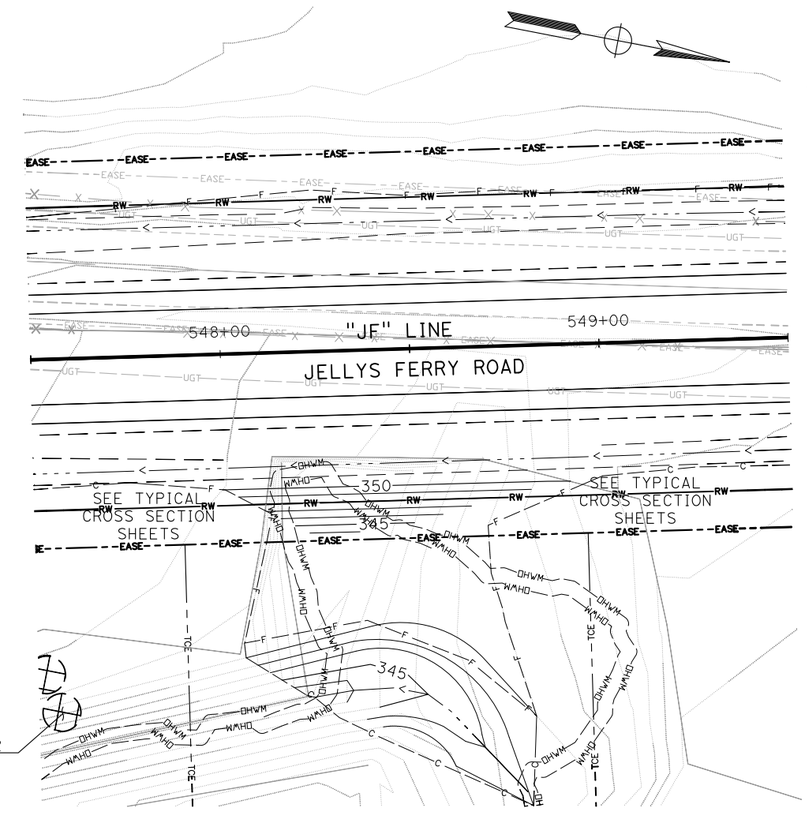

CHANNEL REALIGNMENT

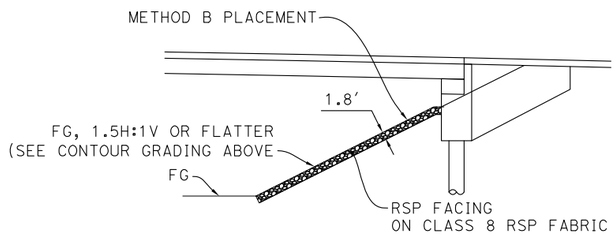

SACRAMENTO RIVER OVERFLOW BRIDGE - ABUTMENT 12
SLOPE PROTECTION
NTS

CONTOUR GRADING
SCALE 1"=20'

G-4

THIS PLAN ACCURATE FOR CONTOUR GRADING AND SLOPE PROTECTION WORK ONLY

65% SUBMITTAL, NOT FOR CONSTRUCTION

RELATIVE BORDER SCALE IS IN INCHES 0 1 2 3

REVISED BY	DATE REVISED

CALCULATED-DESIGNED BY	CHECKED BY
K. BEWSEY/ D. ZURCHER	KEITH RHODES

PROJECT ENGINEER: MICHAEL WOLOHAN

TEHAMA COUNTY DEPARTMENT OF PUBLIC WORKS

JELLYS FERRY IMPROVEMENT PROJECT

XRef List: | 054-BRDR | 054-X-TP | 054-X-UTIL | 054-X-LANDNET | 054-Proposed ROW | 054-CG-D | 054-C-RD | 054-Corridor | 054-Drainage | 054-ENV |
Mar. 20, 2015 - 09:43:14 DWG Name: P:\710054 - Jellys Ferry Bridge\500_Engineering\510_Civil\511_CADD\SHEETS\054-G.dwg Updated By: DZurcher

Dist.	COUNTY	ROUTE	POST MILE TOTAL PROJECT	SHEET No.	TOTAL SHEETS
2	TEH	JF		40	138

REGISTERED CIVIL ENGINEER DATE

PLANS APPROVAL DATE

REGISTERED PROFESSIONAL ENGINEER
K. BEWSEY
No. 71485
Exp. 12/31/15
CIVIL
STATE OF CALIFORNIA

T.Y. LIN INTERNATIONAL OR ITS OFFICERS OR AGENTS SHALL NOT BE RESPONSIBLE FOR THE ACCURACY OR COMPLETENESS OF ELECTRONIC COPIES OF THIS PLAN SHEET.

T·Y·LIN INTERNATIONAL
1601 RESPONSE ROAD, SUITE 260
SACRAMENTO, CA 95815

NOTES:

1. SEE SHEET CG-1 FOR NOTES & LEGEND.

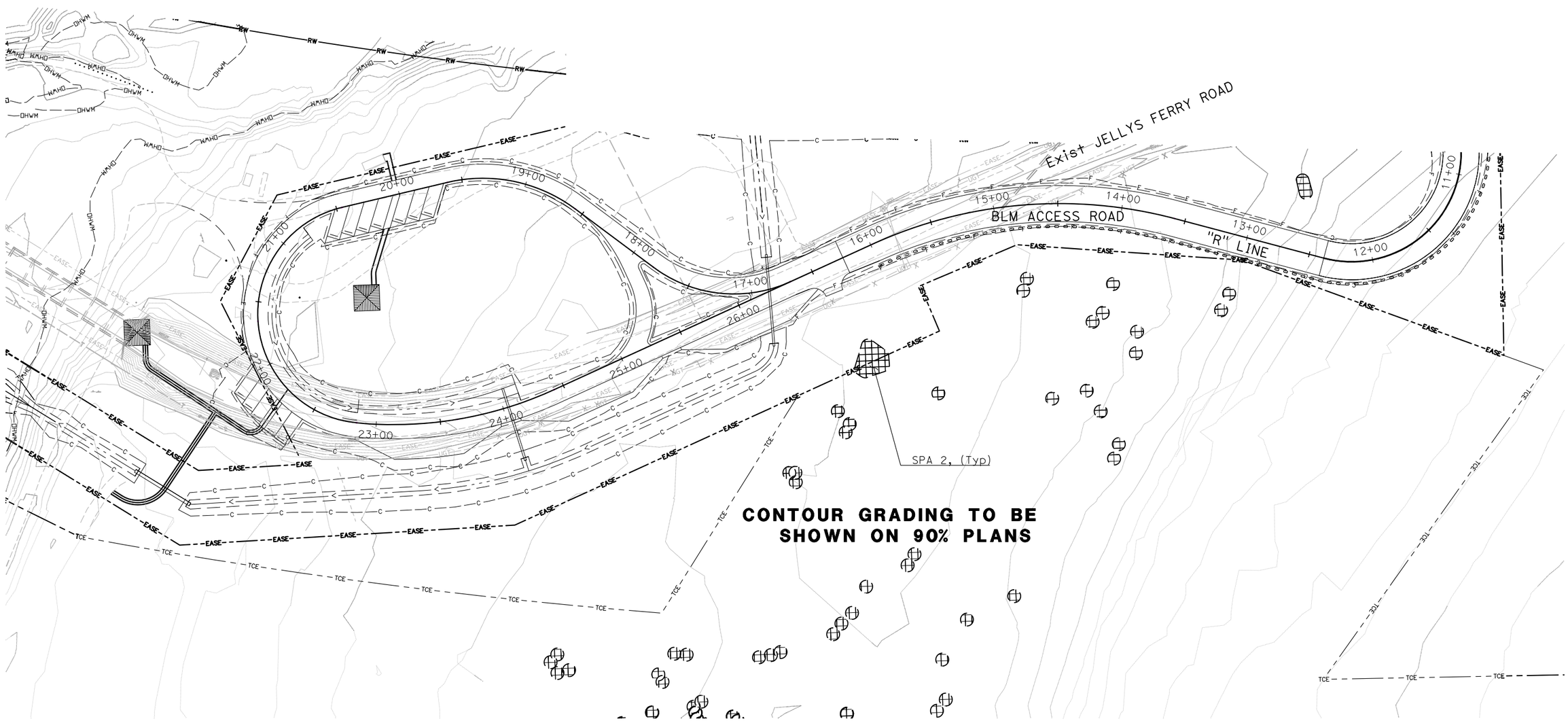

JELLYS FERRY RECREATIONAL SITE

CONTOUR GRADING
SCALE 1"=40'

G-5

65% SUBMITTAL, NOT FOR CONSTRUCTION

THIS PLAN ACCURATE FOR CONTOUR GRADING WORK ONLY

RELATIVE BORDER SCALE IS IN INCHES 0 1 2 3

REVISED BY	DATE REVISED

CALCULATED-DESIGNED BY	CHECKED BY
K. BEWSEY/ D. ZURCHER	KEITH RHODES

PROJECT ENGINEER
MICHAEL WOLOHAN

TEHAMA COUNTY DEPARTMENT OF PUBLIC WORKS

JELLYS FERRY IMPROVEMENT PROJECT

XRef List: | 054-BRDR | 054-X-TP | 054-X-UTIL | 054-X-LANDNET | 054-Proposed ROW | 054-CG-D | 054-C-RD | 054-Corridor | 054-Drainage | 054-ENV |
Mar. 20, 2015 - 09:43:14 DWG Name: P:\710054 - Jellys Ferry Bridge\500_Engineering\510_Civil\511_CADD\SHEETS\054-G.dwg Updated By: DZurcher

Dist.	COUNTY	ROUTE	POST MILE TOTAL PROJECT	SHEET No.	TOTAL SHEETS
2	TEH	JF		41	138

REGISTERED CIVIL ENGINEER DATE

PLANS APPROVAL DATE

REGISTERED PROFESSIONAL ENGINEER
K. BEWSEY
No. 71485
Exp. 12/31/15
CIVIL
STATE OF CALIFORNIA

T.Y. LIN INTERNATIONAL OR ITS OFFICERS OR AGENTS SHALL NOT BE RESPONSIBLE FOR THE ACCURACY OR COMPLETENESS OF ELECTRONIC COPIES OF THIS PLAN SHEET.

T·Y·LIN INTERNATIONAL
1601 RESPONSE ROAD, SUITE 260
SACRAMENTO, CA 95815

NOTES:

1. SEE SHEET CG-1 FOR NOTES & LEGEND.

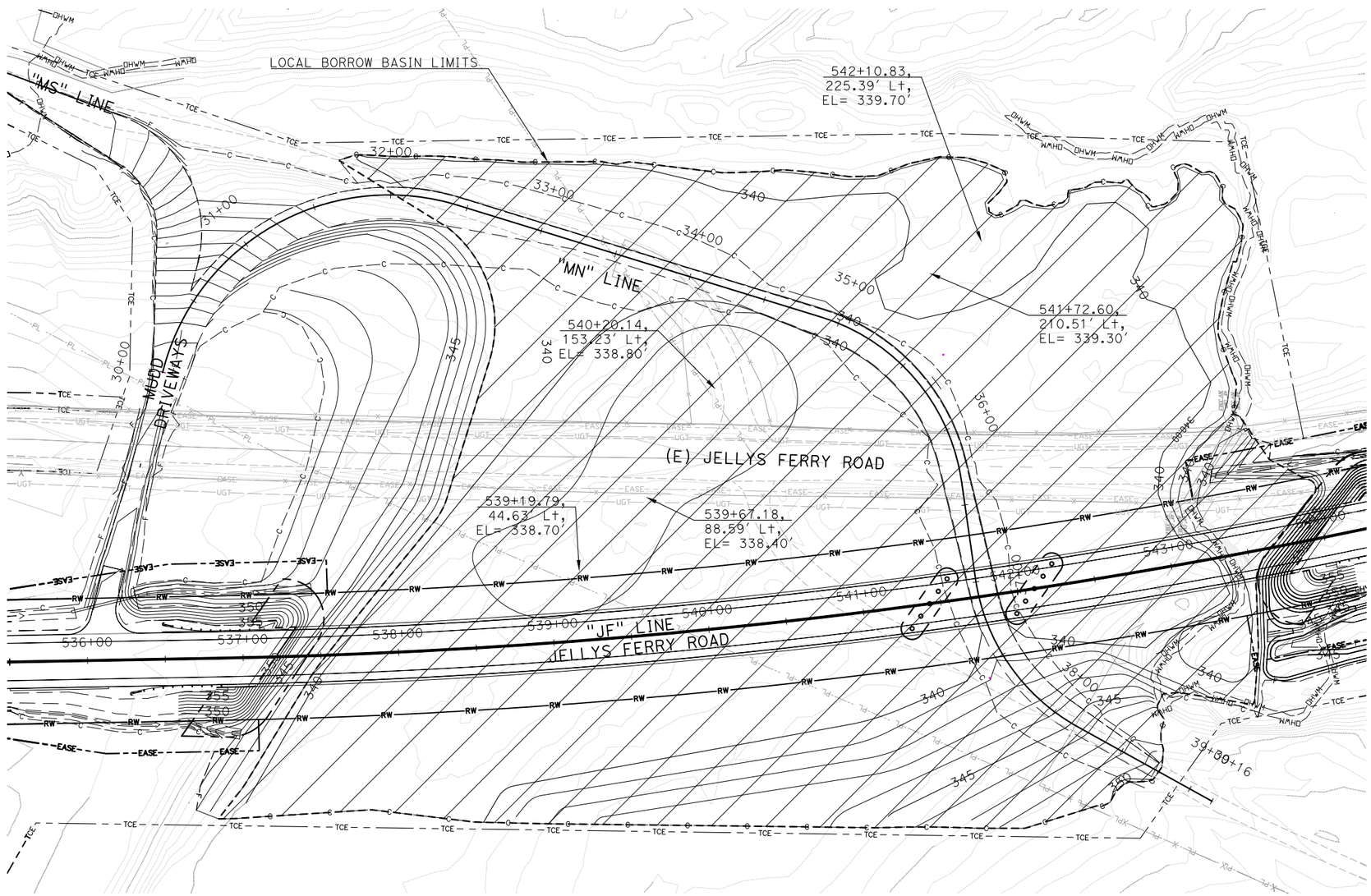

LOCAL BORROW BASIN

CONTOUR GRADING
SCALE 1"=40'
G-6

63% SUBMITTAL, NOT FOR CONSTRUCTION

THIS PLAN ACCURATE FOR CONTOUR GRADING WORK ONLY

RELATIVE BORDER SCALE IS IN INCHES 0 1 2 3	
REVISED BY	DATE REVISED
K. BEWSEY/ D. ZURCHER	KEITH RHODES
CALCULATED-DESIGNED BY	CHECKED BY
PROJECT ENGINEER	MICHAEL WOLOHAN

TEHAMA COUNTY DEPARTMENT OF PUBLIC WORKS

JELLYS FERRY IMPROVEMENT PROJECT

XRef List: | 054-BRDR | 054-X-TP | 054-X-UTIL | 054-X-LANDNET | 054-Proposed ROW | 054-CG-D | 054-C-RD | 054-Corridor | 054-Drainage | 054-ENV |
Mar. 20, 2015 - 09:43:14 DWG Name: P:\710054 - Jellys Ferry Bridge\500_Engineering\510_Civil\511_CADD\SHEETS\054-G.dwg Updated By: DZurcher

Dist.	COUNTY	ROUTE	POST MILE TOTAL PROJECT	SHEET No.	TOTAL SHEETS
2	TEH	JF		42	138

REGISTERED CIVIL ENGINEER DATE

PLANS APPROVAL DATE

REGISTERED PROFESSIONAL ENGINEER K. BEWSEY No. 71485 Exp. 12/31/15 CIVIL STATE OF CALIFORNIA

T.Y. LIN INTERNATIONAL OR ITS OFFICERS OR AGENTS SHALL NOT BE RESPONSIBLE FOR THE ACCURACY OR COMPLETENESS OF ELECTRONIC COPIES OF THIS PLAN SHEET.

T·Y·LIN INTERNATIONAL
1601 RESPONSE ROAD, SUITE 260
SACRAMENTO, CA 95815

ABBREVIATIONS:

Tm THICKNESS OF MOUNTED TOE LAYER OF RSP
To THICKNESS OF OUTSIDE LAYER OF RSP
Ti THICKNESS OF INNER LAYER OF RSP

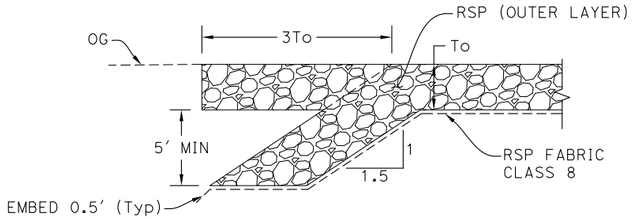

UPSTREAM FLANK DETAIL
SEE LOCATIONS ON PLANS
NO SCALE

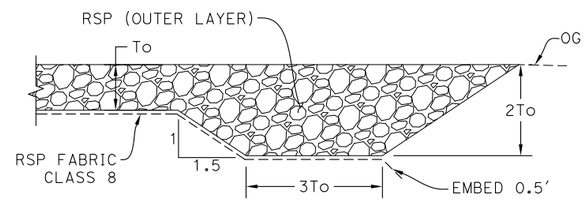

DOWNSTREAM FLANK DETAIL
SEE LOCATIONS ON PLANS
NO SCALE

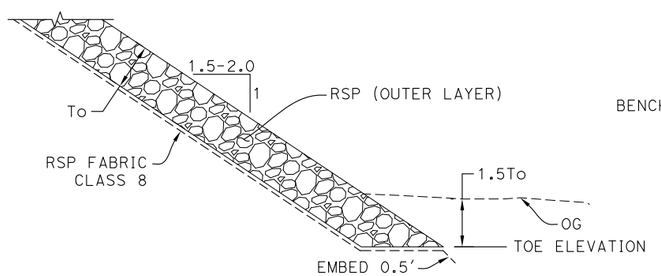

TYPICAL TOE DETAIL
SEE LOCATIONS ON PLANS
NO SCALE

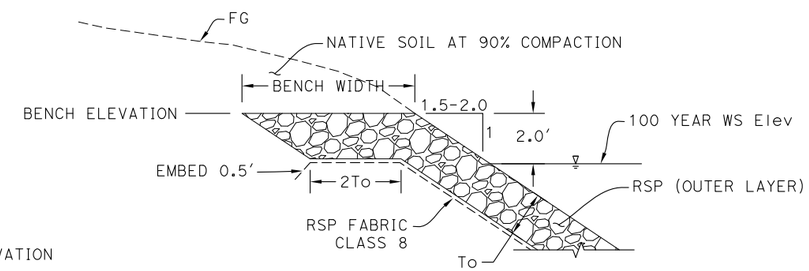

TOP KEY DETAIL
SEE LOCATIONS ON PLANS
NO SCALE

NOTES:

1. NATIVE SOIL MAY BE OMITTED WHEN TOP OF RSP IS BELOW 100 YEAR WS Elev.
2. TOP KEY SHALL BE OMITTED WHEN THE KEY WOULD PENETRATE A PROPOSED OR EXISTING IMPROVEMENT SUCH AS A RETAINING WALL OR ABUTMENT.

RSP QUANTITIES

LOCATION	ROCK SLOPE PROTECTION (½ TON, METHOD B)	ROCK SLOPE PROTECTION (FACING, METHOD B)	ROCK SLOPE PROTECTION (No. 2, METHOD B)	ROCK SLOPE PROTECTION FABRIC (CLASS 8)
	CY	CY	CY	SY
SRO ABUT 1	###	###	###	###
SRO ABUT 7 - LEFT EDGE OF DECK	###	###	###	###
SRO ABUT 7 - RIGHT EDGE OF DECK	###	###	###	###
RW - "JF" 520+10 to 520+30	###	###	###	###
RW - "JF" 520+30 to 524+51	###	###	###	###
RW - "JF" 520+80 to 521+00	###	###	###	###
SROB ABUT 1	###	###	###	###
SROB BENT 8 & 9	###	###	###	###
SROB ABUT 12	###	###	###	###
TOTAL	###	###	###	###

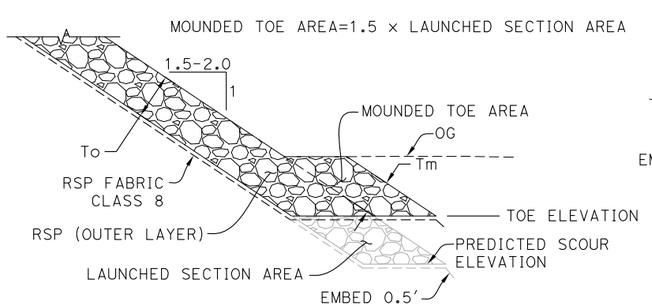

MOUNDED TOE DETAIL
SEE LOCATIONS ON PLANS
NO SCALE

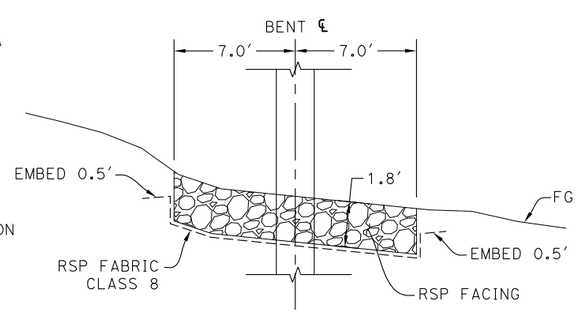

BENT DETAIL
SEE LOCATIONS ON PLANS
NO SCALE

NOTES:

1. ALL DIMENSIONS ARE IN FEET UNLESS OTHERWISE SHOWN.
2. SEE DRAINAGE SHEETS FOR DRAINAGE IMPROVEMENTS.
3. SEE RETAINING WALL PLANS FOR RETAINING WALL.
4. RSP INNER LAYER NOT SHOWN FOR CLARITY.

CONTOUR GRADING DETAILS

SCALE 1"=20'

GD-1

65% SUBMITTAL, NOT FOR CONSTRUCTION

THIS PLAN ACCURATE FOR SLOPE PROTECTION WORK ONLY

TEHAMA COUNTY DEPARTMENT OF PUBLIC WORKS
JELLYS FERRY IMPROVEMENT PROJECT

PROJECT ENGINEER: MICHAEL WOLOHAN
CALCULATED-DESIGNED BY: K. BEWSEY/ D. ZURCHER
CHECKED BY: KEITH RHODES
REVISED BY / DATE REVISED

RELATIVE BORDER SCALE IS IN INCHES 0 1 2 3

XRef List: | 054-BRDR | 054-X-TP | 054-X-UTIL | 054-X-LANDNET | 054-Proposed ROW | 054-CG-D | 054-C-RD | 054-Corridor | 054-Drainage | 054-ENV |
Mar. 20, 2015 - 09:43:14 DWG Name: P:\710054 - Jellys Ferry Bridge\500_Engineering\510_Civil\511_CADD\SHEETS\054-G.dwg Updated By: DZurcher

Dist.	COUNTY	ROUTE	POST MILE TOTAL PROJECT	SHEET No.	TOTAL SHEETS
2	TEH	JF		43	138

REGISTERED CIVIL ENGINEER DATE

PLANS APPROVAL DATE

REGISTERED PROFESSIONAL ENGINEER K. BEWSEY No. 71485 Exp. 12/31/15 CIVIL STATE OF CALIFORNIA

T.Y. LIN INTERNATIONAL OR ITS OFFICERS OR AGENTS SHALL NOT BE RESPONSIBLE FOR THE ACCURACY OR COMPLETENESS OF ELECTRONIC COPIES OF THIS PLAN SHEET.

T·Y·LIN INTERNATIONAL
1601 RESPONSE ROAD, SUITE 260
SACRAMENTO, CA 95815

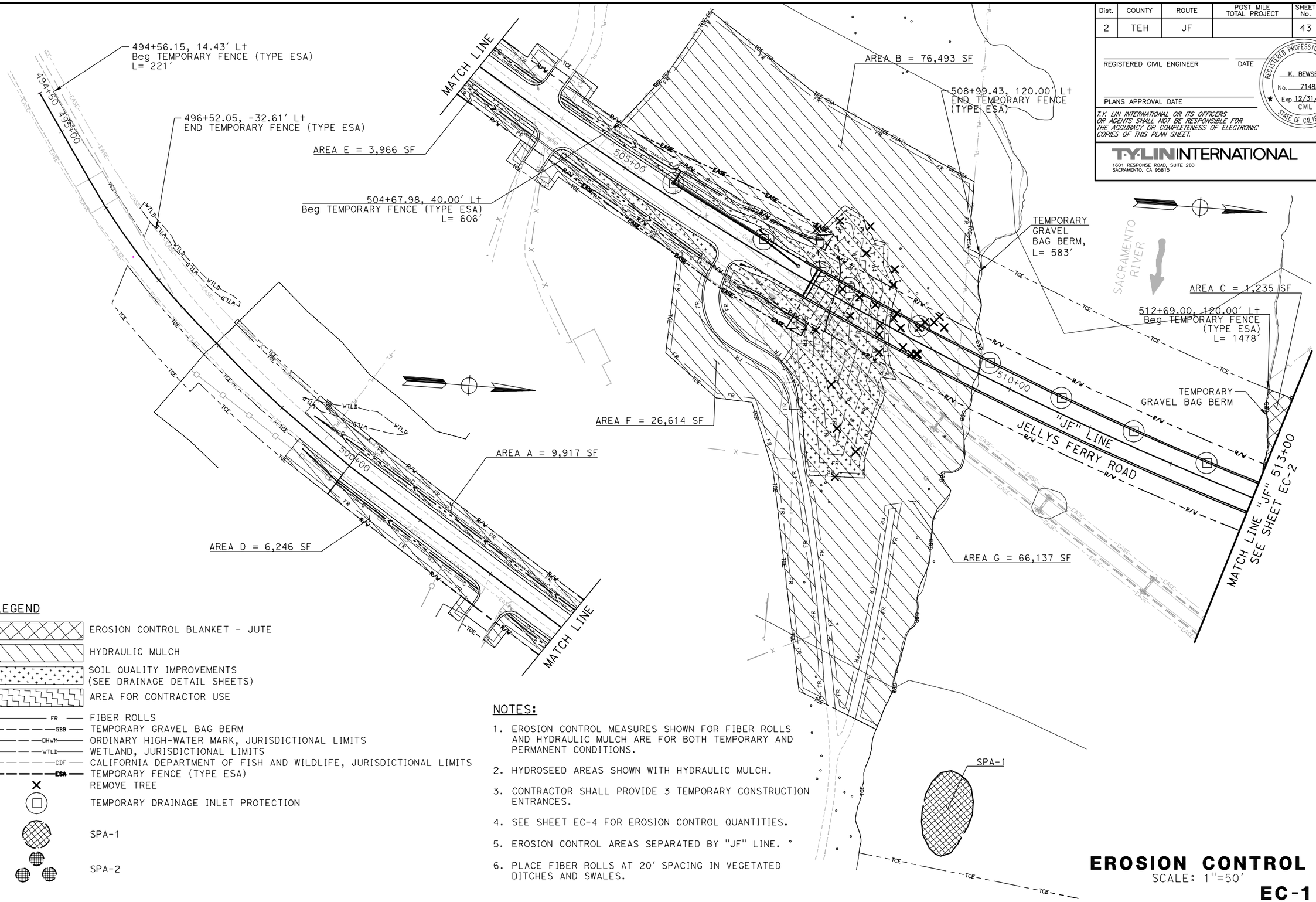

LEGEND

- EROSION CONTROL BLANKET - JUTE
- HYDRAULIC MULCH
- SOIL QUALITY IMPROVEMENTS (SEE DRAINAGE DETAIL SHEETS)
- AREA FOR CONTRACTOR USE
- FR — FIBER ROLLS
- GBB — TEMPORARY GRAVEL BAG BERM
- OHWM — ORDINARY HIGH-WATER MARK, JURISDICTIONAL LIMITS
- WTLD — WETLAND, JURISDICTIONAL LIMITS
- CDF — CALIFORNIA DEPARTMENT OF FISH AND WILDLIFE, JURISDICTIONAL LIMITS
- ESA — TEMPORARY FENCE (TYPE ESA)
- REMOVE TREE
- TEMPORARY DRAINAGE INLET PROTECTION
- SPA-1
- SPA-2

NOTES:

1. EROSION CONTROL MEASURES SHOWN FOR FIBER ROLLS AND HYDRAULIC MULCH ARE FOR BOTH TEMPORARY AND PERMANENT CONDITIONS.
2. HYDROSEED AREAS SHOWN WITH HYDRAULIC MULCH.
3. CONTRACTOR SHALL PROVIDE 3 TEMPORARY CONSTRUCTION ENTRANCES.
4. SEE SHEET EC-4 FOR EROSION CONTROL QUANTITIES.
5. EROSION CONTROL AREAS SEPARATED BY "JF" LINE.
6. PLACE FIBER ROLLS AT 20' SPACING IN VEGETATED DITCHES AND SWALES.

THIS PLAN ACCURATE FOR EROSION CONTROL WORK ONLY

EROSION CONTROL

SCALE: 1"=50'

EC-1

65% SUBMITTAL, NOT FOR CONSTRUCTION

TEHAMA COUNTY DEPARTMENT OF PUBLIC WORKS

JELLYS FERRY IMPROVEMENT PROJECT

PROJECT ENGINEER: MICHAEL WOLOHAN

CALCULATED-DESIGNED BY: K. BEWSEY/ D. ZURCHER

CHECKED BY: KEITH RHODES

REVISED BY | DATE REVISED

RELATIVE BORDER SCALE IS IN INCHES 0 1 2 3

XRef List: | 054-BRDR | 054-C-RD | 054-X-TP | 054-X-LANDNET | 054-Proposed ROW | 054-Drainage | 054-Corridor | 054-CG-D | 054-ENV |
Mar. 20, 2015 - 10:18:32 DWG Name: P:\710054 - Jellys Ferry Bridge\500_Engineering\510_Civil\511_CADD\SHEETS\054-EC.dwg Updated By: DZurcher

Dist.	COUNTY	ROUTE	POST MILE TOTAL PROJECT	SHEET No.	TOTAL SHEETS
2	TEH	JF		44	138

REGISTERED CIVIL ENGINEER DATE

PLANS APPROVAL DATE

REGISTERED PROFESSIONAL ENGINEER
K. BEWSEY
No. 71485
Exp. 12/31/15
CIVIL
STATE OF CALIFORNIA

T.Y. LIN INTERNATIONAL OR ITS OFFICERS OR AGENTS SHALL NOT BE RESPONSIBLE FOR THE ACCURACY OR COMPLETENESS OF ELECTRONIC COPIES OF THIS PLAN SHEET.

T·Y·LIN INTERNATIONAL
1601 RESPONSE ROAD, SUITE 260
SACRAMENTO, CA 95815

NOTES:

1. SEE SHEET EC-1 FOR NOTES AND LEGEND.

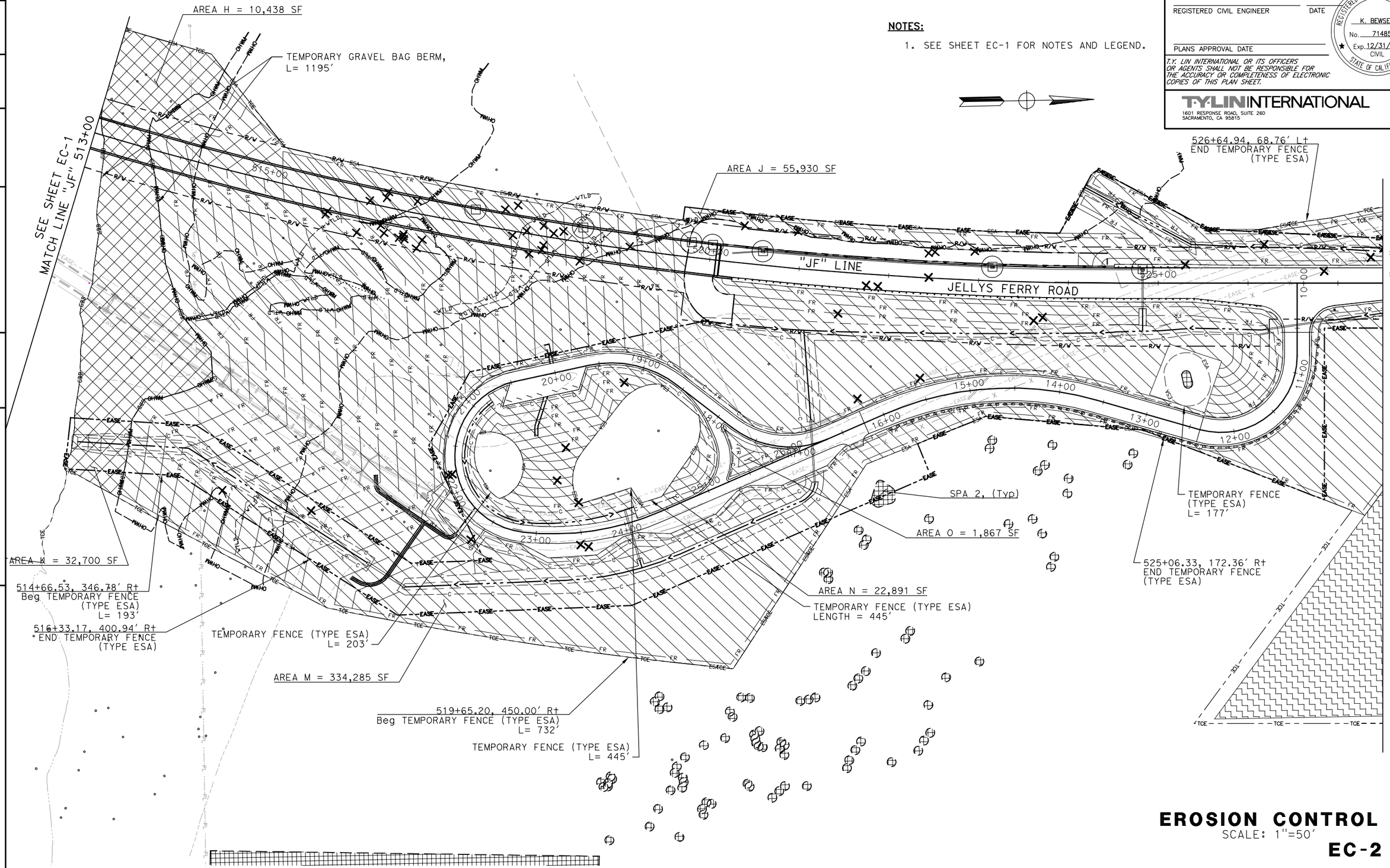

THIS PLAN ACCURATE FOR EROSION CONTROL WORK ONLY

EROSION CONTROL

SCALE: 1"=50'

EC-2

65% SUBMITTAL, NOT FOR CONSTRUCTION

RELATIVE BORDER SCALE IS IN INCHES	0 1 2 3
REVISED BY	
DATE REVISED	
CALCULATED-DESIGNED BY	K. BEWSEY/ D. ZURCHER
CHECKED BY	KEITH RHODES
PROJECT ENGINEER	MICHAEL WOLOHAN

TEHAMA COUNTY DEPARTMENT OF PUBLIC WORKS

JELLYS FERRY IMPROVEMENT PROJECT

XRef List: | 054-BRDR | 054-C-RD | 054-X-TP | 054-X-LANDNET | 054-Proposed ROW | 054-Drainage | 054-Corridor | 054-CG-D | 054-ENV |
Mar. 20, 2015 – 10:18:32 DWG Name: P:\710054 – Jellys Ferry Bridge\500_Engineering\510_Civil\511_CADD\SHEETS\054-EC.dwg Updated By: DZurcher

Dist.	COUNTY	ROUTE	POST MILE TOTAL PROJECT	SHEET No.	TOTAL SHEETS
2	TEH	JF		45	138

REGISTERED CIVIL ENGINEER DATE

PLANS APPROVAL DATE

REGISTERED PROFESSIONAL ENGINEER K. BEWSEY No. 71485 Exp. 12/31/15 CIVIL STATE OF CALIFORNIA

T.Y. LIN INTERNATIONAL OR ITS OFFICERS OR AGENTS SHALL NOT BE RESPONSIBLE FOR THE ACCURACY OR COMPLETENESS OF ELECTRONIC COPIES OF THIS PLAN SHEET.

T·Y·LIN INTERNATIONAL
1601 RESPONSE ROAD, SUITE 260
SACRAMENTO, CA 95815

NOTES:

1. SEE SHEET EC-1 FOR NOTES AND LEGEND.

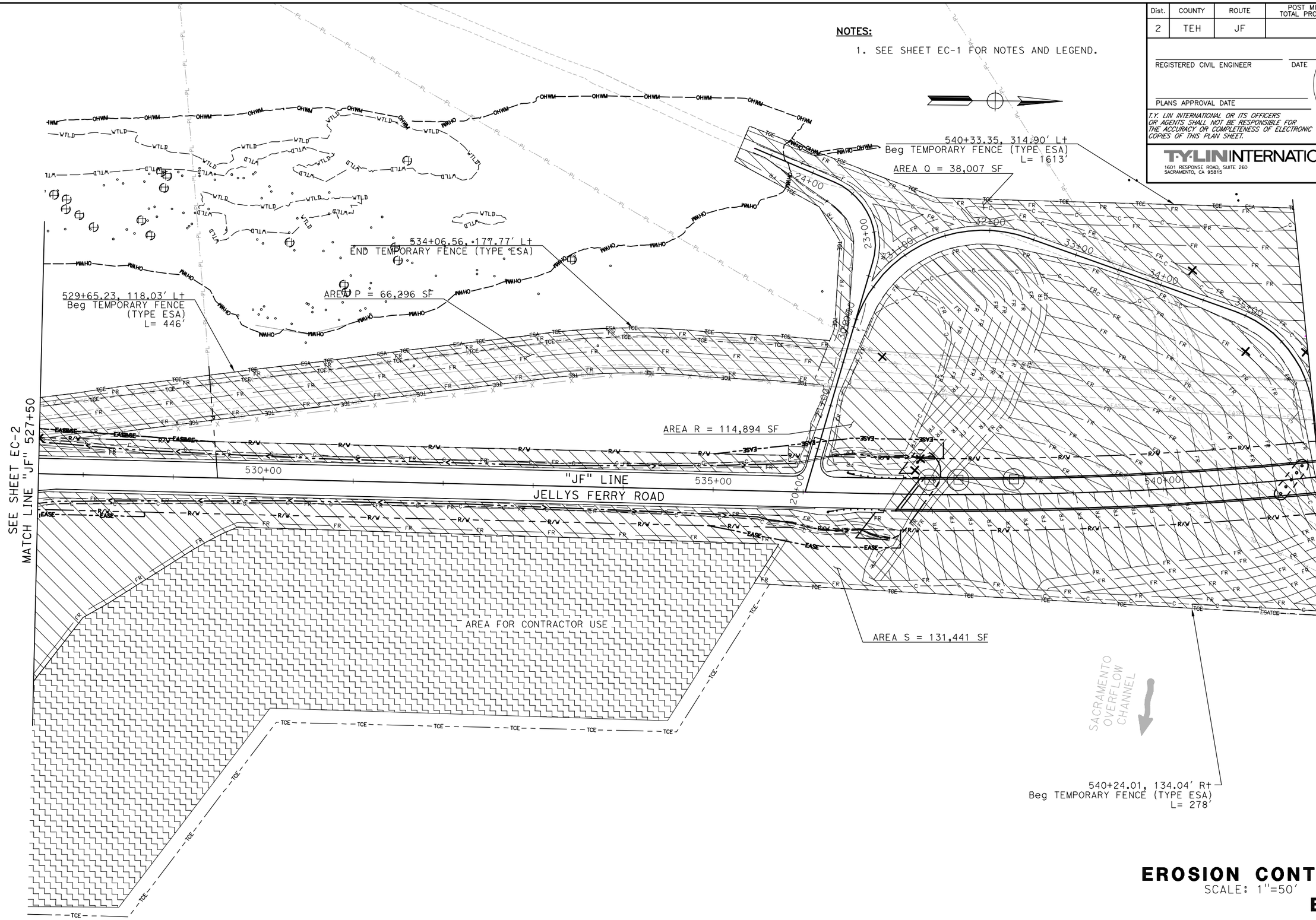

EROSION CONTROL
SCALE: 1"=50'
EC-3

65% SUBMITTAL, NOT FOR CONSTRUCTION

THIS PLAN ACCURATE FOR EROSION CONTROL WORK ONLY

RELATIVE BORDER SCALE IS IN INCHES 0 1 2 3

REVISED BY	DATE REVISED

CALCULATED-DESIGNED BY	CHECKED BY
K. BEWSEY/ D. ZURCHER	KEITH RHODES

PROJECT ENGINEER: MICHAEL WOLOHAN

TEHAMA COUNTY DEPARTMENT OF PUBLIC WORKS
JELLYS FERRY IMPROVEMENT PROJECT

XRef List: | 054-BRDR | 054-C-RD | 054-X-TP | 054-X-LANDNET | 054-Proposed ROW | 054-Drainage | 054-Corridor | 054-CG-D | 054-ENV |
Mar. 20, 2015 - 10:18:32 DWG Name: P:\710054 - Jellys Ferry Bridge\500_Engineering\510_Civil\511_CADD\SHEETS\054-EC.dwg Updated By: DZurcher

Dist.	COUNTY	ROUTE	POST MILE TOTAL PROJECT	SHEET No.	TOTAL SHEETS
2	TEH	JF		46	138

REGISTERED CIVIL ENGINEER DATE

PLANS APPROVAL DATE

REGISTERED PROFESSIONAL ENGINEER K. BEWSEY No. 71485 Exp. 12/31/15 CIVIL STATE OF CALIFORNIA

T.Y. LIN INTERNATIONAL OR ITS OFFICERS OR AGENTS SHALL NOT BE RESPONSIBLE FOR THE ACCURACY OR COMPLETENESS OF ELECTRONIC COPIES OF THIS PLAN SHEET.

T·Y·LIN INTERNATIONAL
1601 RESPONSE ROAD, SUITE 260
SACRAMENTO, CA 95815

NOTES:

1. SEE SHEET EC-1 FOR NOTES AND LEGEND.

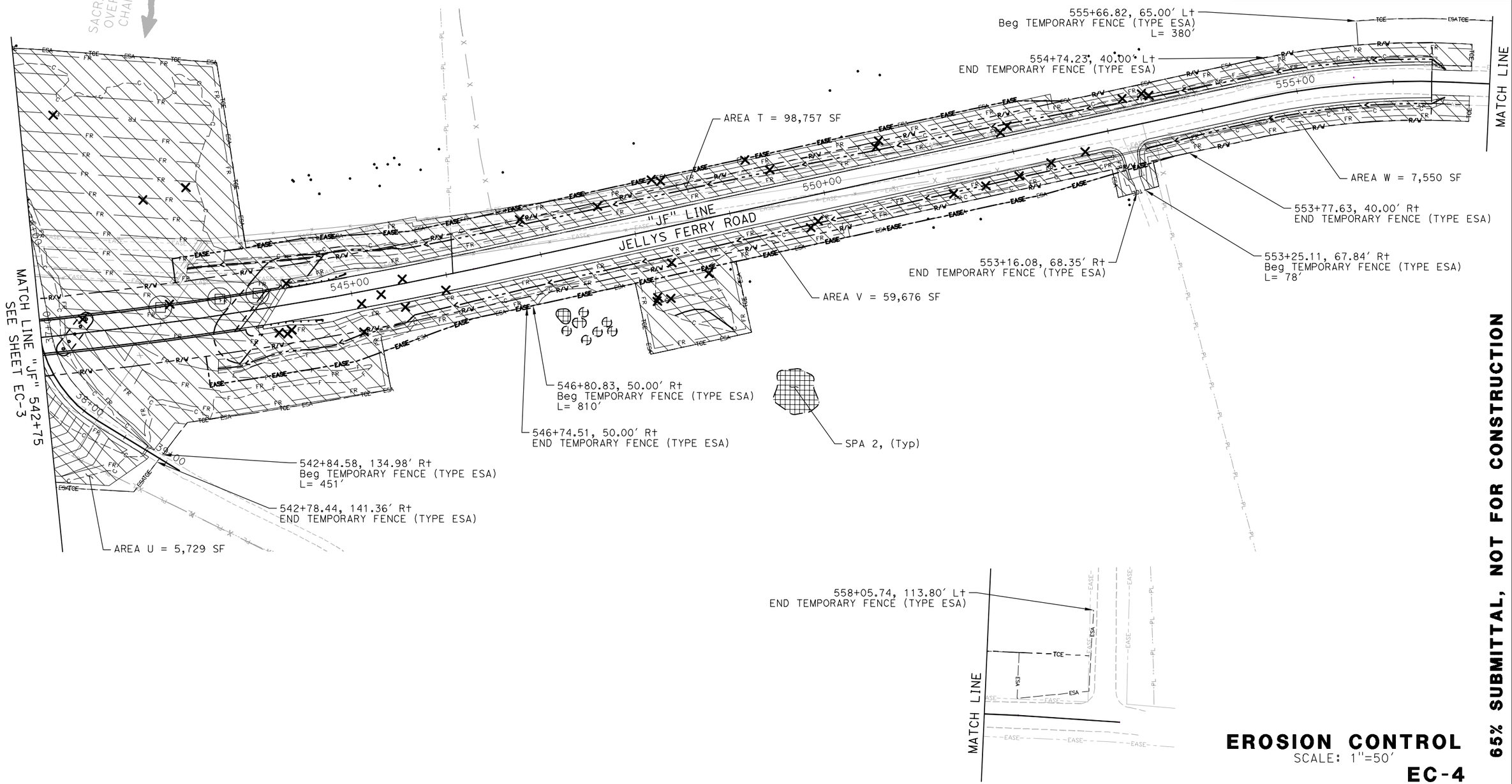

EROSION CONTROL
SCALE: 1"=50′

EC-4

65% SUBMITTAL, NOT FOR CONSTRUCTION

THIS PLAN ACCURATE FOR EROSION CONTROL WORK ONLY

REVISED BY	DATE REVISED

CALCULATED-DESIGNED BY	CHECKED BY
K. BEWSEY/ D. ZURCHER	KEITH RHODES

PROJECT ENGINEER
MICHAEL WOLOHAN

TEHAMA COUNTY DEPARTMENT OF PUBLIC WORKS

JELLYS FERRY IMPROVEMENT PROJECT

RELATIVE BORDER SCALE IS IN INCHES 0 1 2 3

XRef List: | 054-BRDR | 054-C-RD | 054-X-TP | 054-X-LANDNET | 054-Proposed ROW | 054-Drainage | 054-Corridor | 054-CG-D | 054-ENV |
Mar. 20, 2015 – 10:18:32 DWG Name: P:\710054 – Jellys Ferry Bridge\500_Engineering\510_Civil\511_CADD\SHEETS\054-EC.dwg Updated By: DZurcher

Dist.	COUNTY	ROUTE	POST MILE TOTAL PROJECT	SHEET No.	TOTAL SHEETS
2	TEH	JF		47	138

REGISTERED CIVIL ENGINEER DATE

PLANS APPROVAL DATE

REGISTERED PROFESSIONAL ENGINEER K. BEWSEY No. 71485 Exp. 12/31/15 CIVIL STATE OF CALIFORNIA

T.Y. LIN INTERNATIONAL OR ITS OFFICERS OR AGENTS SHALL NOT BE RESPONSIBLE FOR THE ACCURACY OR COMPLETENESS OF ELECTRONIC COPIES OF THIS PLAN SHEET.

T·Y·LIN INTERNATIONAL
1601 RESPONSE ROAD, SUITE 260
SACRAMENTO, CA 95815

EROSION CONTROL QUANTITIES

	TEMPORARY FIBER ROLL	TEMPORARY EROSION CONTROL (HYDRAULIC MULCH)	TEMPORARY GRAVEL BAG BERM	FIBER ROLL	EROSION CONTROL (HYDRAULIC MULCH)	ROLLED EROSION CONTROL BLANKET (TYPE A)	FENCE (TYPE ESA)	DUFF	TREE REMOVAL	TEMPORARY INLET PROTECTION	DRAINAGE INLET MARKER
AREA	LF	SF	LF	LF	SF	SF	LF	AC	EA	EA	EA
A	461	9,917		461	9,917	0	0	0	0	0	0
B	1,827	76,493		1,827	76,493	0	0	0	17	0	0
C						1,235	0	0	0	0	0
D	292	6,246		292	6,246	0	0	0	0	0	0
E	214	3,966		214	3,966	0	0	0	0	0	0
F	1,314	26,614		1,314	26,614	0	0	0	0	0	0
G	2,960	66,137		2,960	66,137	0	0	0	15	0	0
H						10,438	0	0	0	0	0
J	3,540	55,930		3,540	55,930	0	0	0	21	0	0
K						32,700	0	0	0	0	0
M	15,023	334,285		15,023	334,285	0	0	0	30	0	0
N	1,470	22,891		1,470	22,891	0	0	0	4	0	0
O	119	1,867		119	1,867	0	0	0	1	0	0
P	1,251	64,436		3,900	66,296	0	0	0	0	0	0
Q	2,357	38,007		2,357	38,007	0	0	0	2	0	0
R	7,066	114,894		7,066	114,894	0	0	0	4	0	0
S	6,833	131,441		6,833	131,441	0	0	0	0	0	0
T	5,979	98,757		5,979	98,757	0	0	0	20	0	0
U	532	5,729		532	5,729	0	0	0	0	0	0
V	3,742	59,676		3,742	59,676	0	0	0	20	0	0
W	755	7,550	1195	755	7,550	0	0	0	0	0	0
MISC	0					0	8033	0	20	22	22
TOTAL	55,735	1,124,836	1,195	58,384	1,126,696	44,373	8,033	0	154	22	22

NOTES:

1. SEE SHEET EC-1 FOR NOTES AND LEGEND.

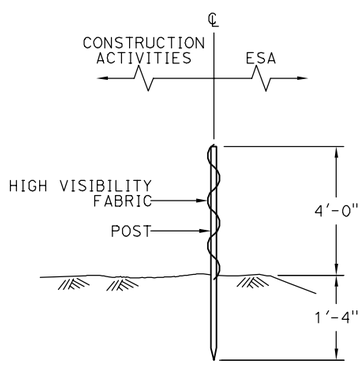

TEMPORARY FENCE (TYPE ESA)
NO SCALE

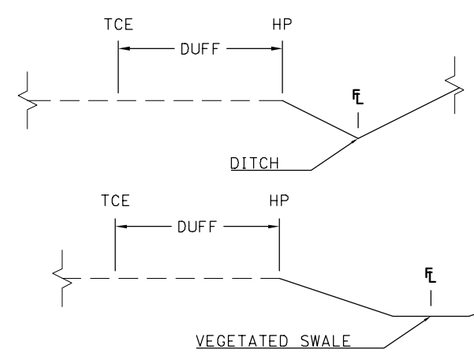

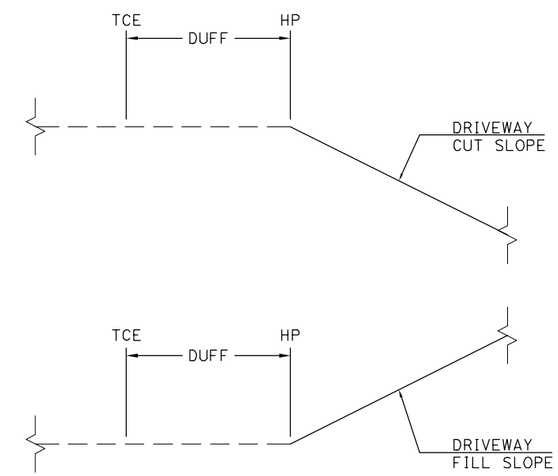

DUFF PLACEMENT
NO SCALE

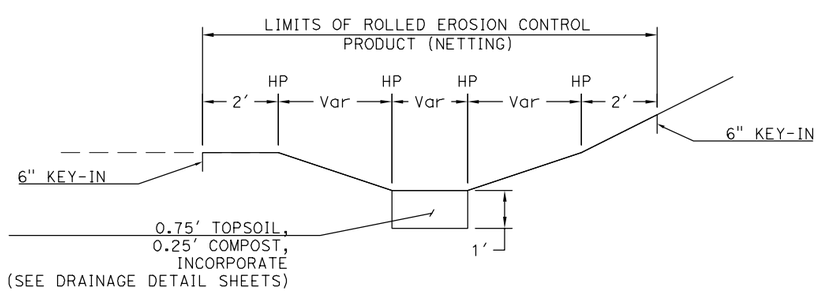

TRAPEZOIDAL VEGETATED SWALE SECTION
NO SCALE

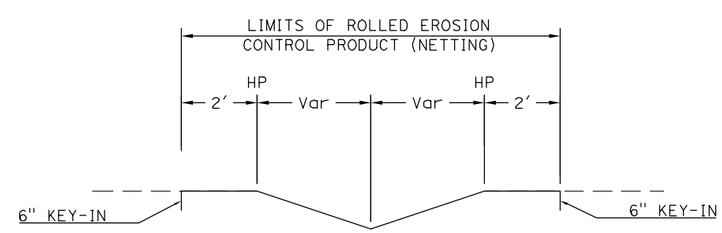

V-SHAPED VEGETATED SWALE SECTION
NO SCALE

EROSION CONTROL DETAILS

SCALE: 1"=50'

ECD-1

65% SUBMITTAL, NOT FOR CONSTRUCTION

THIS PLAN ACCURATE FOR EROSION CONTROL WORK ONLY

REVISED BY	DATE REVISED

CALCULATED-DESIGNED BY	CHECKED BY
K. BEWSEY/ D. ZURCHER	KEITH RHODES

PROJECT ENGINEER: MICHAEL WOLOHAN

TEHAMA COUNTY DEPARTMENT OF PUBLIC WORKS

JELLYS FERRY IMPROVEMENT PROJECT

RELATIVE BORDER SCALE IS IN INCHES 0 1 2 3

xRef List: | 054-BRDR | 054-C-RD | 054-X-TP | 054-X-LANDNET | 054-Proposed ROW | 054-Drainage | 054-Corridor | 054-CG-D | 054-ENV |
Mar. 20, 2015 - 10:18:32 DWG Name: P:\710054 - Jellys Ferry Bridge\500_Engineering\510_Civil\511_CADD\SHEETS\054-EC.dwg Updated By: DZurcher

Dist.	COUNTY	ROUTE	POST MILE TOTAL PROJECT	SHEET No.	TOTAL SHEETS
2	TEH	JF		48	138

REGISTERED CIVIL ENGINEER DATE

PLANS APPROVAL DATE

REGISTERED PROFESSIONAL ENGINEER K. BEWSEY No. 71485 Exp. 12/31/15 CIVIL STATE OF CALIFORNIA

T.Y. LIN INTERNATIONAL OR ITS OFFICERS OR AGENTS SHALL NOT BE RESPONSIBLE FOR THE ACCURACY OR COMPLETENESS OF ELECTRONIC COPIES OF THIS PLAN SHEET.

T·Y·LIN INTERNATIONAL
1601 RESPONSE ROAD, SUITE 260
SACRAMENTO, CA 95815

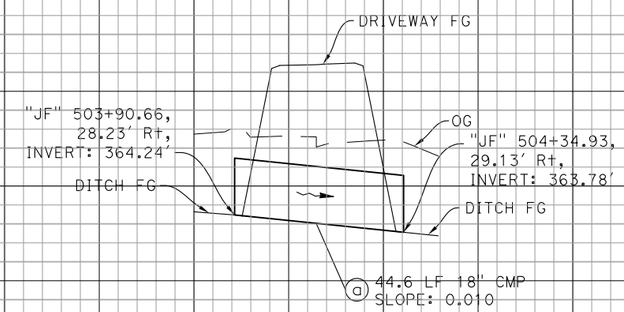

DRAINAGE SYSTEM No. 1

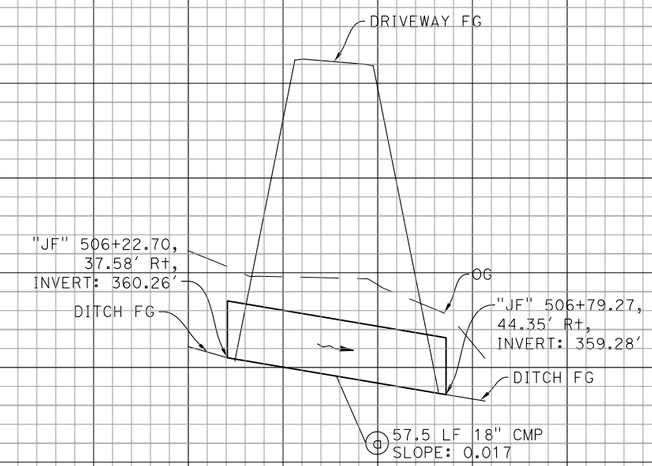

DRAINAGE SYSTEM No. 2

NOTES:

1. ALL DIMENSIONS ARE IN FEET UNLESS OTHERWISE SHOWN.
2. ALL STATIONING ALONG "JF" LINE UNLESS OTHERWISE NOTED.
3. FOR COMPLETE RIGHT OF WAY, SEE RIGHT OF WAY RECORD MAPS AT TEHAMA COUNTY.

LEGEND

(#) DRAINAGE SYSTEM No.

(x) DRAINAGE UNIT No.

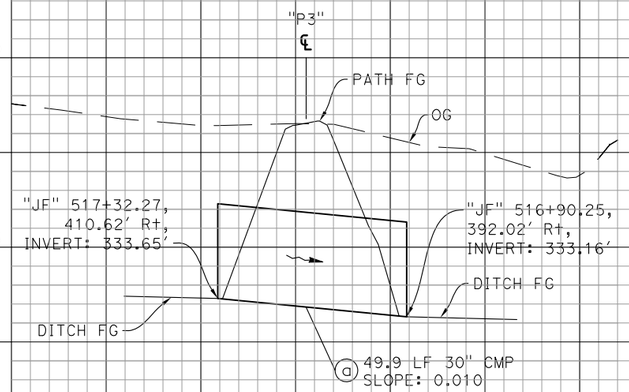

DRAINAGE SYSTEM No. 4

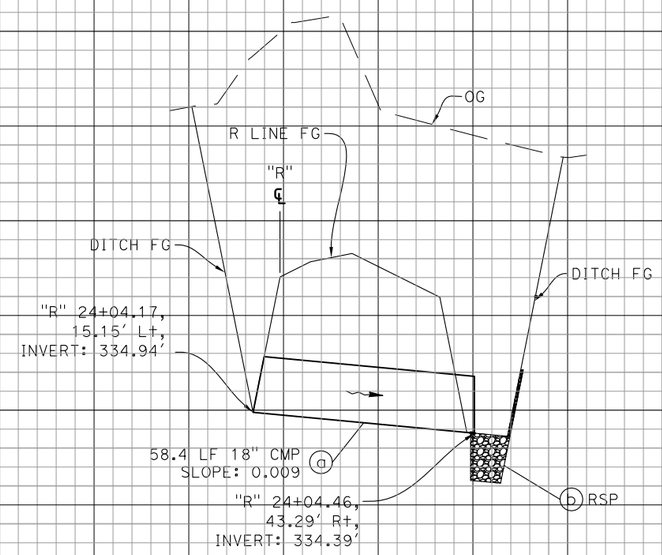

DRAINAGE SYSTEM No. 5

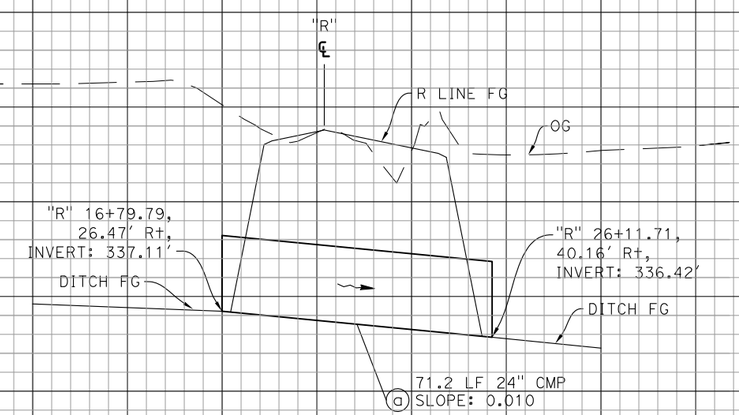

DRAINAGE SYSTEM No. 6

DRAINAGE PROFILES

SCALE: Horiz 1" = 20'
Vert 1" = 2'

DP-1

65% SUBMITTAL, NOT FOR CONSTRUCTION

STATION		TOTAL
CY	Exc	
	Emb	

RELATIVE BORDER SCALE IS IN INCHES 0 1 2 3

REVISED BY	DATE REVISED
K. BEWSEY/ D. ZURCHER	KEITH RHODES
CALCULATED-DESIGNED BY	CHECKED BY
PROJECT ENGINEER	MICHAEL WOLOHAN

TEHAMA COUNTY DEPARTMENT OF PUBLIC WORKS

JELLYS FERRY IMPROVEMENT PROJECT

XRef List: | 054-C-RD | 054-BRDR | 054-Drainage |
Mar. 20, 2015 - 11:13:29 DWG Name: P:\710054 - Jellys Ferry Bridge\500_Engineering\510_Civil\511_CADD\SHEETS\054-DP.dwg Updated By: DZurcher

Dist.	COUNTY	ROUTE	POST MILE TOTAL PROJECT	SHEET No.	TOTAL SHEETS
2	TEH	JF		49	138

REGISTERED CIVIL ENGINEER DATE

PLANS APPROVAL DATE

REGISTERED PROFESSIONAL ENGINEER K. BEWSEY No. 71485 Exp. 12/31/15 CIVIL STATE OF CALIFORNIA

T.Y. LIN INTERNATIONAL OR ITS OFFICERS OR AGENTS SHALL NOT BE RESPONSIBLE FOR THE ACCURACY OR COMPLETENESS OF ELECTRONIC COPIES OF THIS PLAN SHEET.

T·Y·LIN INTERNATIONAL
1601 RESPONSE ROAD, SUITE 260
SACRAMENTO, CA 95815

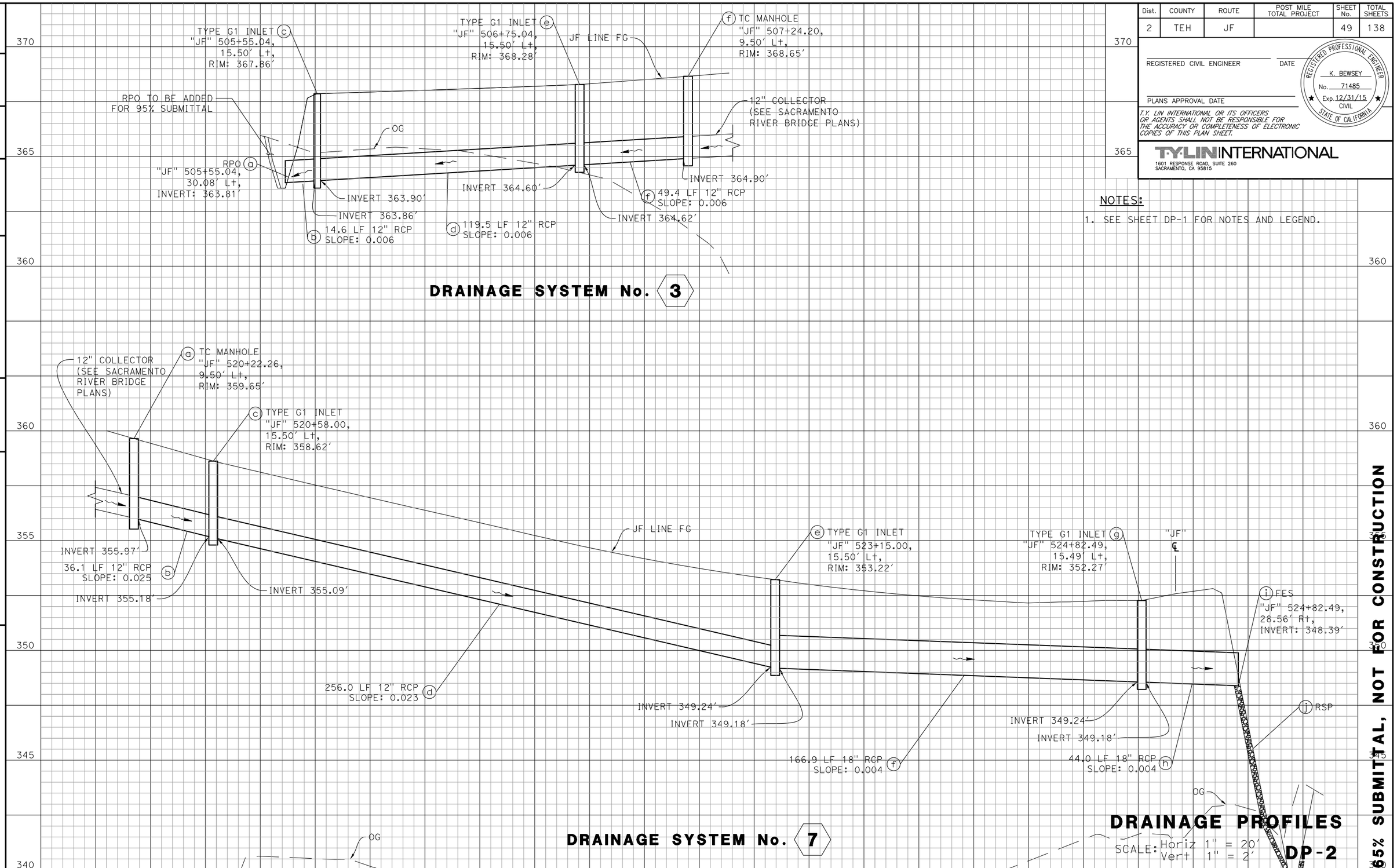

NOTES:

1. SEE SHEET DP-1 FOR NOTES AND LEGEND.

STATION		340	345	350	355	360	365	370	TOTAL
CY	Exc								
	Emb								

65% SUBMITTAL, NOT FOR CONSTRUCTION

RELATIVE BORDER SCALE IS IN INCHES 0 1 2 3

REVISED BY	DATE REVISED

CALCULATED-DESIGNED BY	CHECKED BY
K. BEWSEY/ D. ZURCHER	KEITH RHODES

PROJECT ENGINEER
MICHAEL WOLOHAN

TEHAMA COUNTY DEPARTMENT OF PUBLIC WORKS

JELLYS FERRY IMPROVEMENT PROJECT

XRef List: | 054-C-RD | 054-BRDR | 054-Drainage |
Mar. 20, 2015 – 11:13:29 DWG Name: P:\710054 – Jellys Ferry Bridge\500_Engineering\510_Civil\511_CADD\SHEETS\054-DP.dwg Updated By: DZurcher

Dist.	COUNTY	ROUTE	POST MILE TOTAL PROJECT	SHEET No.	TOTAL SHEETS
2	TEH	JF		50	138

REGISTERED CIVIL ENGINEER DATE

PLANS APPROVAL DATE

REGISTERED PROFESSIONAL ENGINEER
K. BEWSEY
No. 71485
Exp. 12/31/15
CIVIL
STATE OF CALIFORNIA

T.Y. LIN INTERNATIONAL OR ITS OFFICERS OR AGENTS SHALL NOT BE RESPONSIBLE FOR THE ACCURACY OR COMPLETENESS OF ELECTRONIC COPIES OF THIS PLAN SHEET.

T·Y·LIN INTERNATIONAL
1601 RESPONSE ROAD, SUITE 260
SACRAMENTO, CA 95815

NOTES:

1. SEE SHEET DP-1 FOR NOTES AND LEGEND.

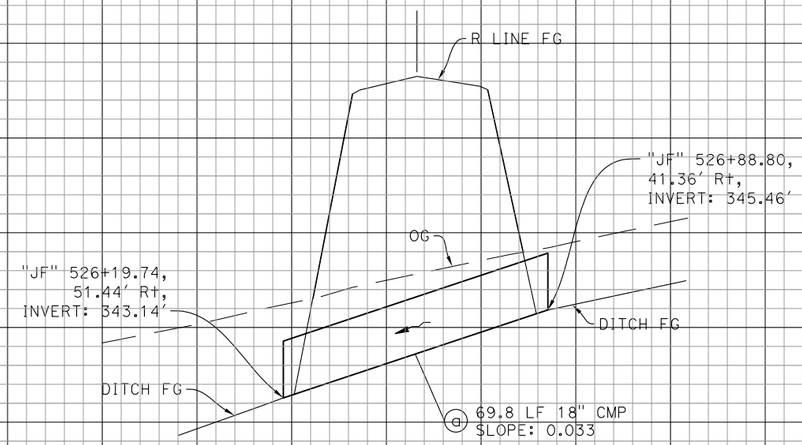

DRAINAGE SYSTEM No. 8

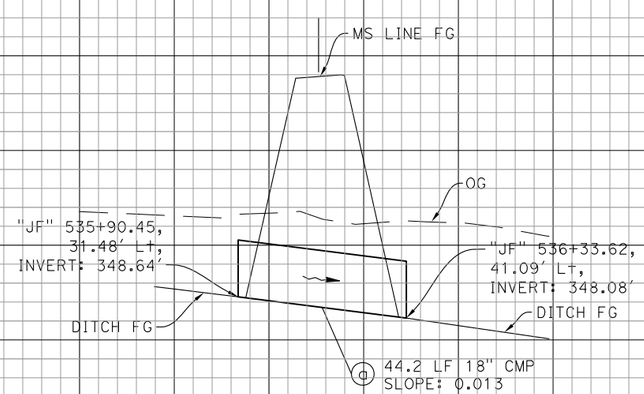

DRAINAGE SYSTEM No. 9

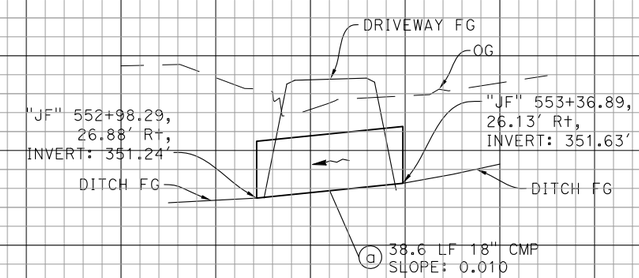

DRAINAGE SYSTEM No. 10

DRAINAGE PROFILES

SCALE: Horiz 1" = 20'
Vert 1" = 2'

DP-3

65% SUBMITTAL, NOT FOR CONSTRUCTION

STATION		TOTAL
CY	Exc	
	Emb	

RELATIVE BORDER SCALE IS IN INCHES 0 1 2 3

REVISED BY	DATE REVISED
K. BEWSEY/ D. ZURCHER	KEITH RHODES
CALCULATED-DESIGNED BY	CHECKED BY
PROJECT ENGINEER	MICHAEL WOLOHAN

TEHAMA COUNTY DEPARTMENT OF PUBLIC WORKS
JELLYS FERRY IMPROVEMENT PROJECT

XRef List: | 054-C-RD | 054-BRDR | 054-Drainage |
Mar. 20, 2015 – 11:13:29 DWG Name: P:\710054 – Jellys Ferry Bridge\500_Engineering\510_Civil\511_CADD\SHEETS\054-DP.dwg Updated By: DZurcher

Dist.	COUNTY	ROUTE	POST MILE TOTAL PROJECT	SHEET No.	TOTAL SHEETS
2	TEH	JF		51	138

REGISTERED CIVIL ENGINEER DATE

PLANS APPROVAL DATE

REGISTERED PROFESSIONAL ENGINEER K. BEWSEY No. 71485 Exp. 12/31/15 CIVIL STATE OF CALIFORNIA

T.Y. LIN INTERNATIONAL OR ITS OFFICERS OR AGENTS SHALL NOT BE RESPONSIBLE FOR THE ACCURACY OR COMPLETENESS OF ELECTRONIC COPIES OF THIS PLAN SHEET.

T·Y·LIN INTERNATIONAL
1601 RESPONSE ROAD, SUITE 260
SACRAMENTO, CA 95815

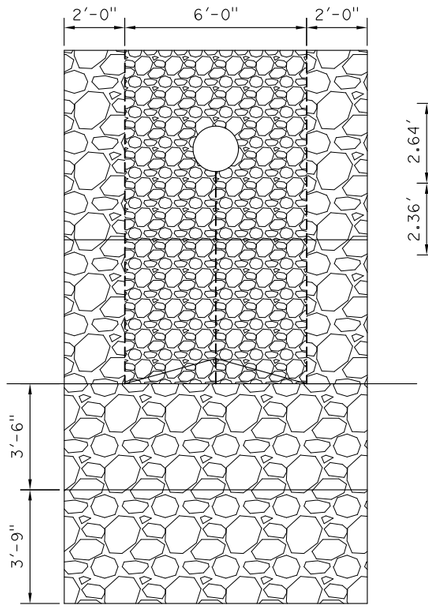

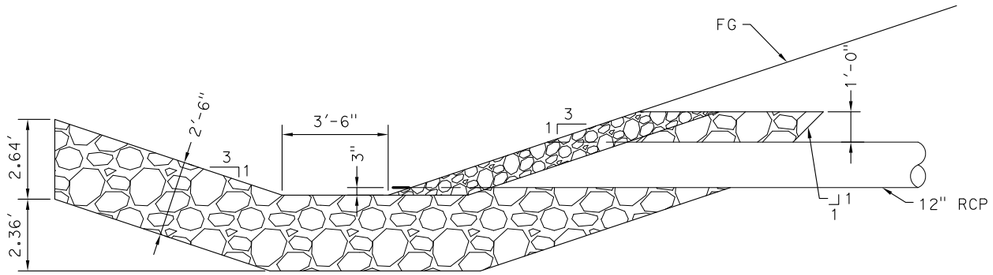

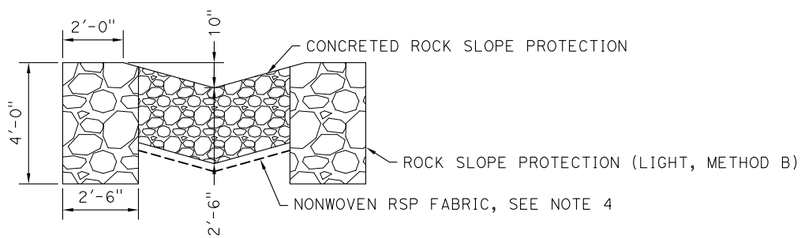

NOTES:

1. CONCRETED-ROCK SLOPE PROTECTION AND ROCK SLOPE PROTECTION SHALL CONFORM TO THE STATE STANDARD SPECIFICATIONS. UNLESS OTHERWISE SPECIFIED, THE ROCK CLASS SHALL BE LIGHT, METHOD B PLACEMENT.
2. LAP ROCK SLOPE PROTECTION FABRIC IN ACCORDANCE WITH THE MANUFACTURERS REQUIREMENTS.
3. CONCRETE SHALL BE PLACED IN ACCORDANCE WITH STATE STANDARD SPECIFICATIONS.
4. FABRIC SHALL COMPLY TO STATE STANDARD SPECIFICATION 72-2 "ROCK SLOPE PROTECTION".

ROCK PIPE OUTFALL

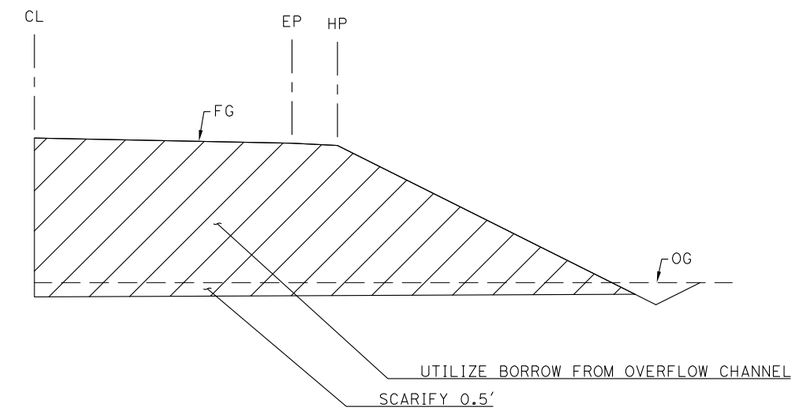

NOTES:

1. FROM BP TO SACRAMENTO RIVER BRIDGE BB.

SOIL QUALITY IMPROVEMENTS

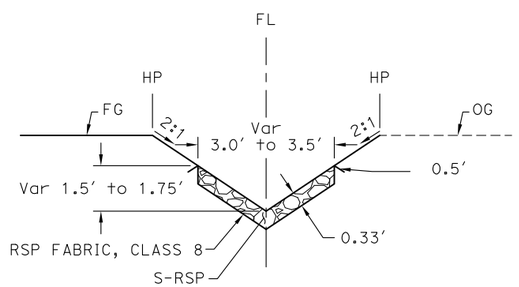

RSP DITCH SECTION

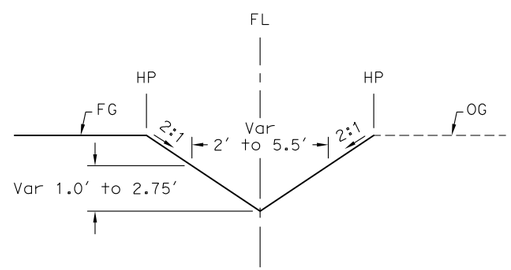

VEGETATED DITCH SECTION

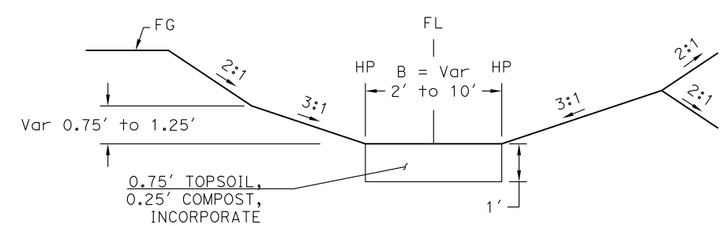

TRAPEZOIDAL VEGETATED SWALE SECTION

DRAINAGE DETAILS

NO SCALE

DD-1

65% SUBMITTAL, NOT FOR CONSTRUCTION

THIS PLAN ACCURATE FOR DRAINAGE DETAILS ONLY

RELATIVE BORDER SCALE IS IN INCHES 0 1 2 3

REVISED BY	DATE REVISED

CALCULATED-DESIGNED BY	CHECKED BY
K. BEWSEY/ D. ZURCHER	KEITH RHODES

PROJECT ENGINEER: MICHAEL WOLOHAN

TEHAMA COUNTY DEPARTMENT OF PUBLIC WORKS

JELLYS FERRY IMPROVEMENT PROJECT

XRef List: | 054-BRDR |
Mar. 20, 2015 – 11:19:54 DWG Name: P:\710054 – Jellys Ferry Bridge\500_Engineering\510_Civil\511_CADD\SHEETS\054-DD.dwg Updated By: DZurcher

Dist.	COUNTY	ROUTE	POST MILE TOTAL PROJECT	SHEET No.	TOTAL SHEETS
2	TEH	JF		52	138

REGISTERED CIVIL ENGINEER DATE

PLANS APPROVAL DATE

REGISTERED PROFESSIONAL ENGINEER K. BEWSEY No. 71485 Exp. 12/31/15 CIVIL STATE OF CALIFORNIA

T.Y. LIN INTERNATIONAL OR ITS OFFICERS OR AGENTS SHALL NOT BE RESPONSIBLE FOR THE ACCURACY OR COMPLETENESS OF ELECTRONIC COPIES OF THIS PLAN SHEET.

T·Y·LIN INTERNATIONAL
1601 RESPONSE ROAD, SUITE 260
SACRAMENTO, CA 95815

ROCK SLOPE PROTECTION

DRAINAGE SYSTEM No.	LENGTH, L (FT)	WIDTH, W (FT)		THICKNESS, T (FT)
		UPPER	LOWER	
7i	9	4.0	4.5	1.25

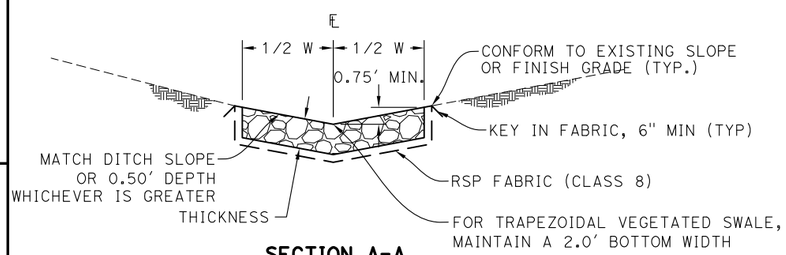

SECTION A-A

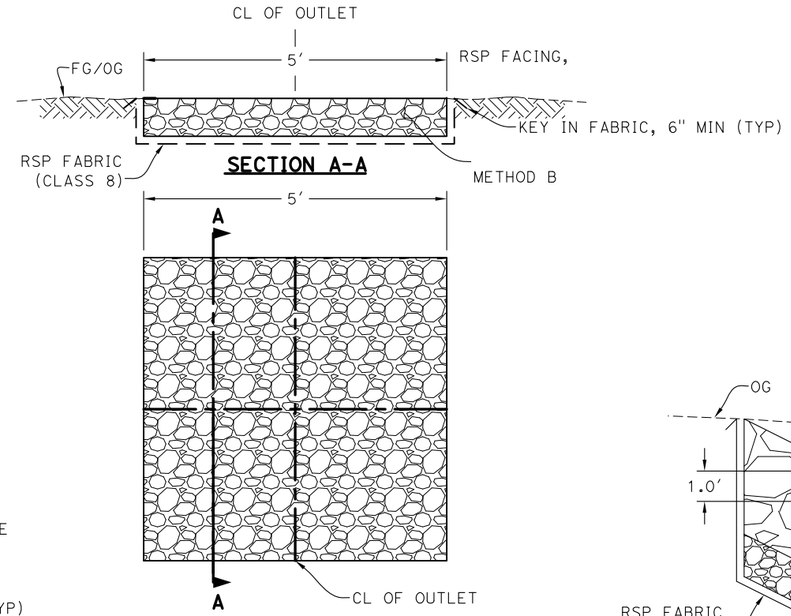

SECTION A-A

PLAN

ROCK SLOPE PROTECTION AT DECK DRAIN

NO SCALE

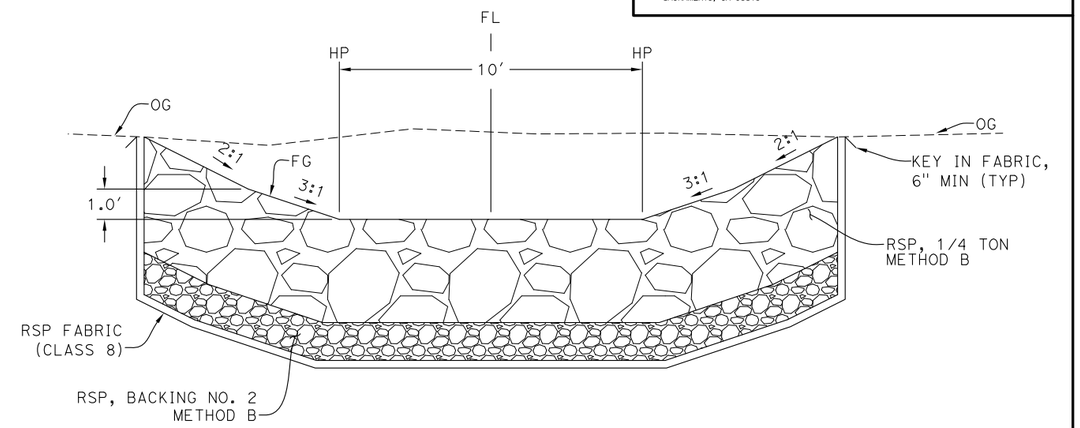

SECTION A-A

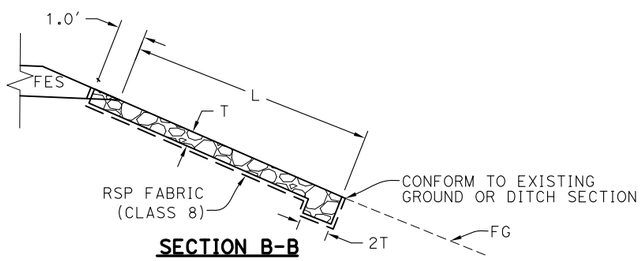

SECTION B-B

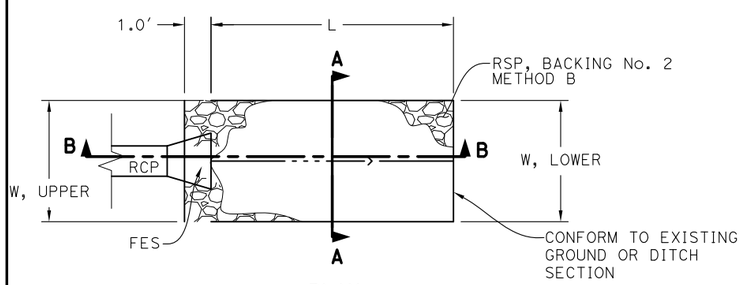

PLAN

ROCK SLOPE PROTECTION

NO SCALE

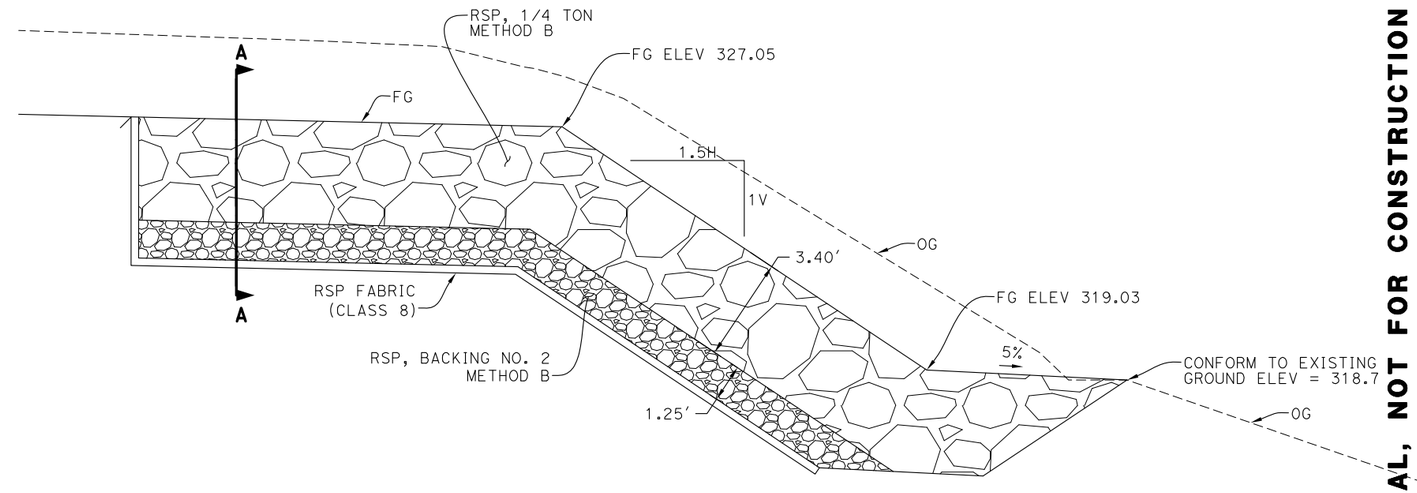

ELEVATION AT FLOWLINE

ROCK SLOPE PROTECTION AT THE SACRAMENTO RIVER

NO SCALE

DRAINAGE DETAILS

NO SCALE

DD-2

65% SUBMITTAL, NOT FOR CONSTRUCTION

THIS PLAN ACCURATE FOR DRAINAGE DETAILS ONLY

RELATIVE BORDER SCALE IS IN INCHES 0 1 2 3

REVISED BY	DATE REVISED

K. BEWSEY/ D. ZURCHER	KEITH RHODES
CALCULATED-DESIGNED BY	CHECKED BY

PROJECT ENGINEER: MICHAEL WOLOHAN

TEHAMA COUNTY DEPARTMENT OF PUBLIC WORKS

JELLYS FERRY IMPROVEMENT PROJECT

XRef List: | 054-BRDR |
Mar. 20, 2015 – 11:19:54 DWG Name: P:\710054 – Jellys Ferry Bridge\500_Engineering\510_Civil\511_CADD\SHEETS\054-DD.dwg Updated By: DZurcher

Dist.	COUNTY	ROUTE	POST MILE TOTAL PROJECT	SHEET No.	TOTAL SHEETS
2	TEH	JF		53	138

REGISTERED CIVIL ENGINEER DATE

PLANS APPROVAL DATE

REGISTERED PROFESSIONAL ENGINEER K. BEWSEY No. 71485 Exp. 12/31/15 CIVIL STATE OF CALIFORNIA

T.Y. LIN INTERNATIONAL OR ITS OFFICERS OR AGENTS SHALL NOT BE RESPONSIBLE FOR THE ACCURACY OR COMPLETENESS OF ELECTRONIC COPIES OF THIS PLAN SHEET.

T·Y·LIN INTERNATIONAL
1601 RESPONSE ROAD, SUITE 260
SACRAMENTO, CA 95815

DRAINAGE QUANTITIES

LAYOUT PLAN SHEET NUMBER	DRAINAGE SYSTEM NUMBER ⬡	DRAINAGE UNIT NUMBER ◯	12" RCP	18" RCP	18" CSP	24" CSP	30" CSP	ROCK SLOPE PROTECTION (¼ TON, METHOD B)	ROCK SLOPE PROTECTION (NO. 2, METHOD B)	ROCK SLOPE PROTECTION (LIGHT, METHOD B)	ROCK SLOPE PROTECTION (FACING, METHOD B)	SMALL-ROCK SLOPE PROTECTION (4")	CONCRETED-ROCK SLOPE PROTECTION (LIGHT, METHOD B)	ROCK SLOPE PROTECTION FABRIC (CLASS 8)	INCORPORATE MATERIALS	LOCAL TOPSOIL (N)	COMPOST	TYPE G1 INLET	INLET FRAME AND GRATE (TYPE 24-13)	TC MANHOLE	MISCELLANEOUS IRON AND STEEL (N)	HEIGHT OF INLET (N)	CONCRETE FLARED END SECTION	ROCK PIPE OUTFALL (RPO) (N)	DRAINAGE INLET MARKER	DESCRIPTION	STATION
			LF	LF	LF	LF	LF	CY	CY	CY	CY	CY	CY	SY	SF	CY	SF	EA	EA	EA	EA	EA	EA	EA	EA		
L-1	1	a			46																					18" CMP	503+90.66 to 504+34.93
L-1/2	2	a			58																					18" CMP	506+22.70 to 506+79.27
	3	a								#			#	#										1		RPO	505+55.04
		b	16																						1	12" RCP	505+55.04
		c																1	1		#	#				TYPE G1 INLET	505+55.04
		d	120																							12" RCP	505+55.04 to 506+75.04
		e																1	1		#	#			1	TYPE G1 INLET	506+75.04
		f	50																							12" RCP	506+75.04 to 507+24.20
		g																		1						TC MANHOLE	507+24.20
L-2/3	4	a					50																			30" CMP	517+32.27 to 516+90.25
L-3	5	a			60																					18" CMP	"R" 24+04.17 to "R" 24+04.46
		b							#					#												8.7' RSP DITCH, D=1.50'	"R" 24+04.46
	6	a				72																				24" CMP	"R" 16+79.79 to "R" 26+11.71
	7	a																		1						TC MANHOLE	520+22.26
		b	38																							12" RCP	520+22.26 to 520+58.00
		c																1	1		#	#			1	TYPE G1 INLET	520+58.00
		d	256																							12" RCP	520+58.00 to 523+15.00
		e																1	1		#	#			1	TYPE G1 INLET	523+15.00
		f		168																						18" RCP	523+15.00 to 524+82.49
		g																1	1		#	#			1	TYPE G1 INLET	524+82.49
		h		44																						18" RCP	524+82.49
		i																					1			FES	524+82.49
		j							#					#												RSP	524+82.49
	8	a			70																					18" CMP	526+19.74 to 526+88.80
L-4	9	a			46																					18" CMP	535+90.45 to 536+33.62
L-6	10	a			40																					18" CMP	552+98.29 to 553+36.89
L-1	11	a																								364.7' VEGETATED DITCH, D=1.25'	499+98.85 to 503+65.56
L-1	12	a																								149.5' VEGETATED DITCH, D=1.25'	503+94.59 to 504+45.09
L-1/2		b													#											191.0' VEGETATED SWALE, B=3.25', D=1.25'	504+45.09 to 507+34.33
L-1	13	a																								199.3' VEGETATED DITCH, D=1.25'	500+00.00 to 501+99.29
	14	a																								150.4' VEGETATED DITCH, D=1.25'	502+41.32 to 503+90.66
	15	a																								189.5' VEGETATED DITCH, D=1.25'	504+34.93 to 506+22.70
L-2	16	a																								86.0' VEGETATED DITCH, D=1.25'	506+79.27 to 507+64.09
L-3	17	a																								627.4' VEGETATED DITCH, D=2.00'	520+00.00 to 526+19.74
		b																								100.0' VEGETATED DITCH, D=2.00'	521+11.11 to "R" 16+79.79
L-3	18	a																								134.2' RSP DITCH, D=1.50'	524+16.95 to 525+36.10
L-3/4		b																								789.4' VEGETATED DITCH, D=1.50'	525+36.10 to 533+25.00
L-4		c																								265.6' VEGETATED DITCH, D=1.25'	533+25.00 to 535+90.45
L-3/4	19	a																								537.1' VEGETATED DITCH, D=1.25'	526+88.80 to 532+24.47
L-4		b																								325.1' VEGETATED DITCH, D=1.00'	532+24.47 to 535+50.00
		c													#											150.2' VEGETATED SWALE, B=2.0', D=0.75'	535+50.00 to 536+97.07
	20	a													#											111.6' VEGETATED SWALE, B=2.0', D=1.00'	536+33.74 to 537+45.30
L-5	21	a													#											223.3' VEGETATED SWALE, B=2.0', D=1.00'	543+35.70 to 545+60.00
L-5/6		b																								1084.8' VEGETATED DITCH, D=1.50'	545+60.00 to 556+40.00
L-5	22	a													#											213.2' VEGETATED SWALE, B=3.0', D=1.00'	543+52.51 to 545+60.00
L-5/6		b																								738.9' VEGETATED DITCH, D=1.50'	545+60.00 to 552+98.29
L-6	23	a																								297.9' VEGETATED DITCH, D=1.50'	553+26.13 to 556+40.00
L-3	24	a							#					#												217.9' RSP DITCH, D=1.75'	"R" 26+11.71 to "R" 24+04.50
		b																								265.3' VEGETATED DITCH, D=2.75'	"R" 24+04.50 to "R" 22+29.28
	25	a																								302.9' VEGETATED DITCH, D=1.50'	"R" 20+80.00 to "R" 24+15.00
L-2	26	a																								95.7' VEGETATED DITCH, D=2.75'	516+90.25 to 516+08.64
		b																								260.0' VEGETATED SWALE, B=10.0', D=1.00'	516+08.64 to 513+78.20
		c							#					#	#											RSP	513+78.20
	SUBTOTAL		480	212	320	72	50	#	#	#	#	#	#	#	#	#	#	5	5	2	#	#	1	1	5		

(N) - NOT A SEPARATE PAY ITEM, FOR INFORMATION ONLY

THIS PLAN ACCURATE FOR DRAINAGE DETAILS ONLY

DRAINAGE DETAILS
NO SCALE

DD-3

65% SUBMITTAL, NOT FOR CONSTRUCTION

RELATIVE BORDER SCALE IS IN INCHES 0 1 2 3

REVISED BY | DATE REVISED

K. BEWSEY/ D. ZURCHER | KEITH RHODES

CALCULATED-DESIGNED BY | CHECKED BY

PROJECT ENGINEER MICHAEL WOLOHAN

TEHAMA COUNTY DEPARTMENT OF PUBLIC WORKS

JELLYS FERRY IMPROVEMENT PROJECT

XRef List: | 054-BRDR |
Mar. 20, 2015 - 11:19:54 DWG Name: P:\710054 - Jellys Ferry Bridge\500_Engineering\510_Civil\511_CADD\SHEETS\054-DD.dwg Updated By: DZurcher

Dist.	COUNTY	ROUTE	POST MILE TOTAL PROJECT	SHEET No.	TOTAL SHEETS
2	TEH	JF		54	138

REGISTERED CIVIL ENGINEER DATE

PLANS APPROVAL DATE

REGISTERED PROFESSIONAL ENGINEER K. BEWSEY No. 71485 Exp. 12/31/15 CIVIL STATE OF CALIFORNIA

T.Y. LIN INTERNATIONAL OR ITS OFFICERS OR AGENTS SHALL NOT BE RESPONSIBLE FOR THE ACCURACY OR COMPLETENESS OF ELECTRONIC COPIES OF THIS PLAN SHEET.

T·Y·LIN INTERNATIONAL
1601 RESPONSE ROAD, SUITE 260
SACRAMENTO, CA 95815

NOTES:

1. ALL DIMENSIONS ARE IN FEET UNLESS OTHERWISE SHOWN.
2. SIGN LOCATIONS SHOWN ARE APPROXIMATE. EXACT LOCATIONS TO BE DETERMINED BY THE ENGINEER.
3. GENERAL CONSTRUCTION AREA SIGNS SHOWN ON CS-1 TO BE INSTALLED PRIOR TO STAGE 1 AND TO REMAIN THROUGHOUT THE DURATION OF PROJECT CONSTRUCTION.

LEGEND:

(A) SIGN NUMBER

┤ SIGN LOCATION, ONE POST

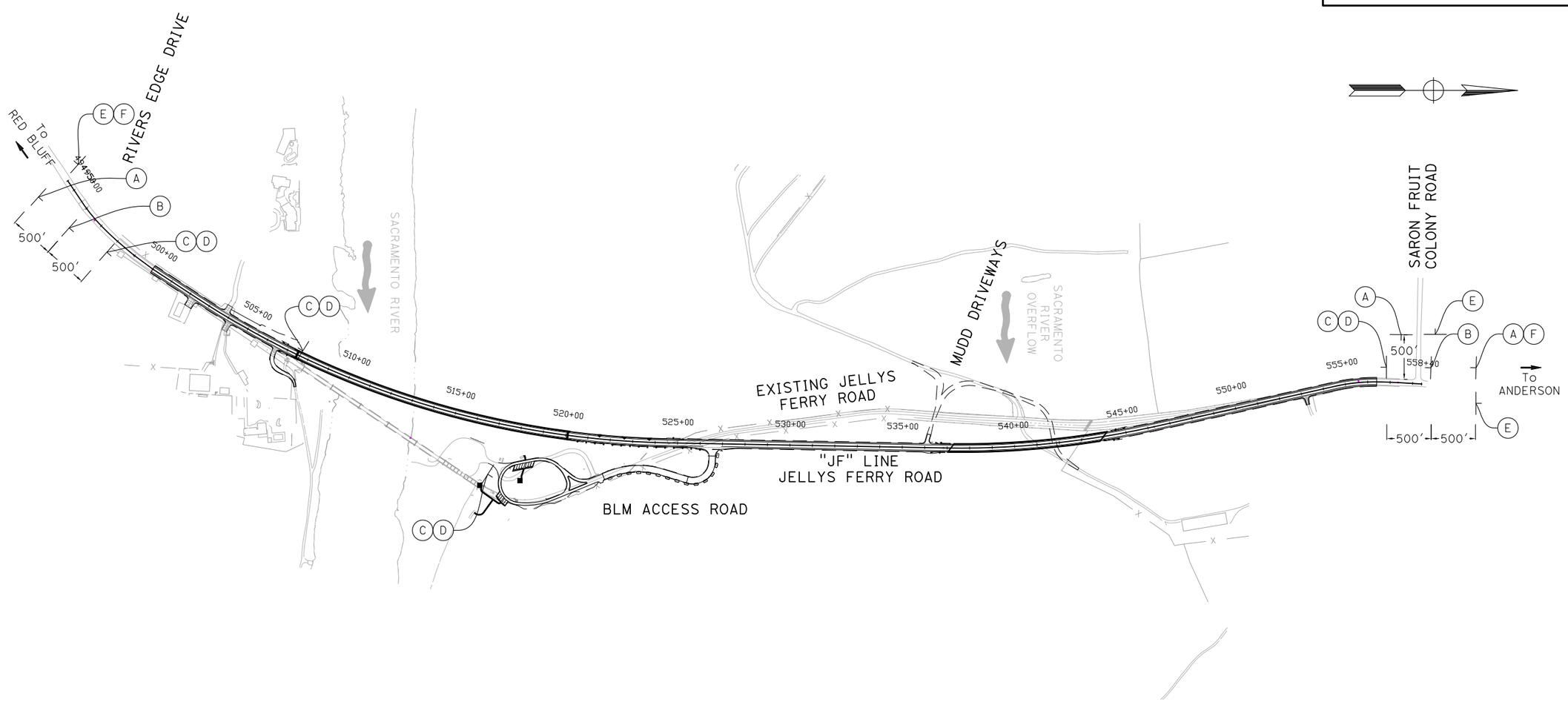

CONSTRUCTION AREA SIGN QUANTITIES

SIGN NO.	SIGN CODE	SIGN MESSAGE	POSTS	SIGN SIZE (INCHES)	# OF SIGN INSTALLATIONS	POST SIZE (INCHES)
(A)	W20-1	ROAD WORK AHEAD	1	36x36	3	4x6
(B)	W3-5A	25 MPH SPEED ZONE AHEAD	1	36x36	2	4x6
(C)	G20-5AP	WORK ZONE	1	24x18	4	4x6
(D)	R2-1	SPEED LIMIT 25	N/A	24x30	4	N/A
(E)	G20-2	END ROAD WORK	1	36x18	3	4x4
(F)	"DUST INFORMATION SIGN"		N/A	N/A	2	4x8

THIS PLAN ACCURATE FOR CONSTRUCTION AREA SIGN WORK ONLY

CONSTRUCTION AREA SIGNS

SCALE: 1"=250'

CAS-1

65% SUBMITTAL, NOT FOR CONSTRUCTION

RELATIVE BORDER SCALE IS IN INCHES 0 1 2 3

REVISED BY	DATE REVISED

CALCULATED-DESIGNED BY: K. BEWSEY/ D. ZURCHER
CHECKED BY: KEITH RHODES

PROJECT ENGINEER: MICHAEL WOLOHAN

TEHAMA COUNTY DEPARTMENT OF PUBLIC WORKS
JELLYS FERRY IMPROVEMENT PROJECT

XRef List: | 054-BRDR | 054-C-RD | 054-X-TP | 054-Corridor |
Mar. 20, 2015 – 11:38:07 DWG Name: P:\710054 – Jellys Ferry Bridge\500_Engineering\510_Civil\511_CADD\SHEETS\054-CAS.dwg Updated By: DZurcher

Dist.	COUNTY	ROUTE	POST MILE TOTAL PROJECT	SHEET No.	TOTAL SHEETS
2	TEH	JF		55	138

REGISTERED CIVIL ENGINEER DATE

PLANS APPROVAL DATE

REGISTERED PROFESSIONAL ENGINEER K. BEWSEY No. 71485 Exp. 12/31/15 CIVIL STATE OF CALIFORNIA

T.Y. LIN INTERNATIONAL OR ITS OFFICERS OR AGENTS SHALL NOT BE RESPONSIBLE FOR THE ACCURACY OR COMPLETENESS OF ELECTRONIC COPIES OF THIS PLAN SHEET.

T·Y·LIN INTERNATIONAL
1601 RESPONSE ROAD, SUITE 260
SACRAMENTO, CA 95815

NOTES:

1. ALL DIMENSIONS ARE IN FEET UNLESS OTHERWISE SHOWN.
2. FOR COMPLETE RIGHT OF WAY, SEE RIGHT OF WAY RECORD MAPS AT TEHAMA COUNTY.
3. ALL STATIONING IS ALONG THE "JF" LINE UNLESS OTHERWISE SPECIFIED.
4. REFER TO SPECIAL PROVISIONS FOR LIMITATION OF WORK PERIODS AND ORDER OF WORK.
5. CONTRACTOR TO MAINTAIN POSITIVE DRAINAGE AND PROVIDE TEMPORARY DRAINAGE OF SITE FOR DURATION OF CONSTRUCTION.
6. FOR DETAILS ON TRAFFIC HANDLING DURING STAGE CONSTRUCTION, SEE TRAFFIC HANDLING PLANS.
7. PLACE FINAL LIFT OF HMA PAVING DURING FINAL STAGE.

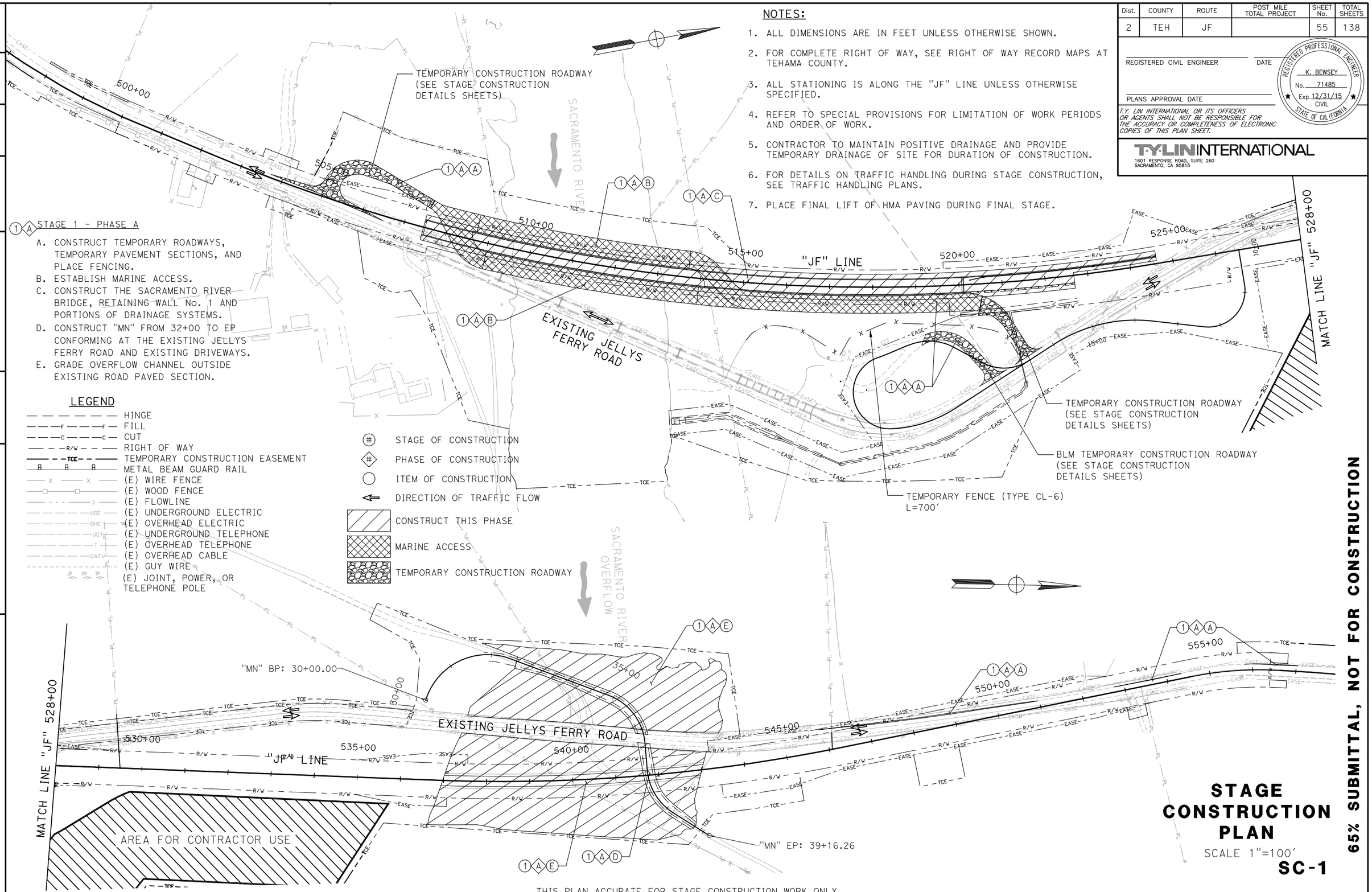

1 A STAGE 1 - PHASE A

A. CONSTRUCT TEMPORARY ROADWAYS, TEMPORARY PAVEMENT SECTIONS, AND PLACE FENCING.
B. ESTABLISH MARINE ACCESS.
C. CONSTRUCT THE SACRAMENTO RIVER BRIDGE, RETAINING WALL No. 1 AND PORTIONS OF DRAINAGE SYSTEMS.
D. CONSTRUCT "MN" FROM 32+00 TO EP CONFORMING AT THE EXISTING JELLYS FERRY ROAD AND EXISTING DRIVEWAYS.
E. GRADE OVERFLOW CHANNEL OUTSIDE EXISTING ROAD PAVED SECTION.

LEGEND

- HINGE
- FILL
- CUT
- RIGHT OF WAY
- TEMPORARY CONSTRUCTION EASEMENT
- METAL BEAM GUARD RAIL
- (E) WIRE FENCE
- (E) WOOD FENCE
- (E) FLOWLINE
- (E) UNDERGROUND ELECTRIC
- (E) OVERHEAD ELECTRIC
- (E) UNDERGROUND TELEPHONE
- (E) OVERHEAD TELEPHONE
- (E) OVERHEAD CABLE
- (E) GUY WIRE
- (E) JOINT, POWER, OR TELEPHONE POLE
- STAGE OF CONSTRUCTION
- PHASE OF CONSTRUCTION
- ITEM OF CONSTRUCTION
- DIRECTION OF TRAFFIC FLOW
- CONSTRUCT THIS PHASE
- MARINE ACCESS
- TEMPORARY CONSTRUCTION ROADWAY

STAGE CONSTRUCTION PLAN

SCALE 1"=100'

SC-1

65% SUBMITTAL, NOT FOR CONSTRUCTION

THIS PLAN ACCURATE FOR STAGE CONSTRUCTION WORK ONLY

REVISED BY	DATE REVISED

RELATIVE BORDER SCALE IS IN INCHES 0 1 2 3

CALCULATED-DESIGNED BY	CHECKED BY
K. BEWSEY/ D. ZURCHER	KEITH RHODES

PROJECT ENGINEER: MICHAEL WOLOHAN

TEHAMA COUNTY DEPARTMENT OF PUBLIC WORKS

JELLYS FERRY IMPROVEMENT PROJECT

XRef List: | 054-BRGR | 054-C-RD | 054-X-TP | 054-X-UTIL | 054-X-LANDNET | 054-Proposed ROW | 054-TEMP. Road | 054-CONSTRUCTION ACCESS | 054-Corridor |
Apr. 20, 2015 - 12:02:39 DWG Name: P:\710054 - Jellys Ferry Bridge\500_Engineering\510_Civil\511_CADD\SHEETS\054-SC.dwg Updated By: DZurcher

Dist.	COUNTY	ROUTE	POST MILE TOTAL PROJECT	SHEET No.	TOTAL SHEETS
2	TEH	JF		56	138

REGISTERED CIVIL ENGINEER DATE

PLANS APPROVAL DATE

REGISTERED PROFESSIONAL ENGINEER K. BEWSEY No. 71485 Exp. 12/31/15 CIVIL STATE OF CALIFORNIA

T.Y. LIN INTERNATIONAL OR ITS OFFICERS OR AGENTS SHALL NOT BE RESPONSIBLE FOR THE ACCURACY OR COMPLETENESS OF ELECTRONIC COPIES OF THIS PLAN SHEET.

T·Y·LIN INTERNATIONAL
1601 RESPONSE ROAD, SUITE 260
SACRAMENTO, CA 95815

NOTES:

1. SEE SHEET SC-1 FOR NOTES AND LEGEND.
2. TEMPORARY CONSTRUCTION ROADWAY AND MARINE ACCESS REMOVAL NOT SHOWN FOR CLARITY.

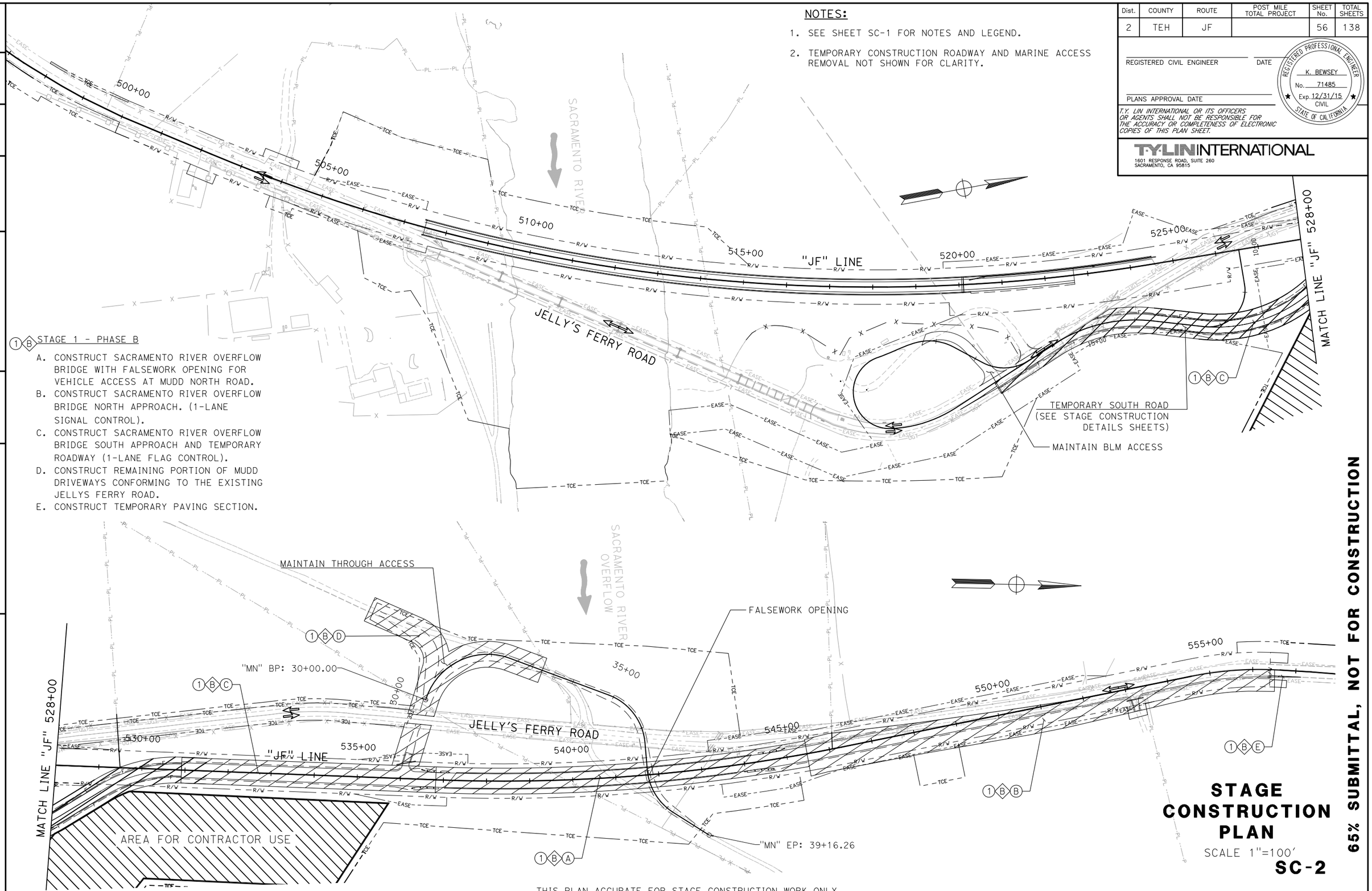

1 B STAGE 1 - PHASE B

A. CONSTRUCT SACRAMENTO RIVER OVERFLOW BRIDGE WITH FALSEWORK OPENING FOR VEHICLE ACCESS AT MUDD NORTH ROAD.
B. CONSTRUCT SACRAMENTO RIVER OVERFLOW BRIDGE NORTH APPROACH. (1-LANE SIGNAL CONTROL).
C. CONSTRUCT SACRAMENTO RIVER OVERFLOW BRIDGE SOUTH APPROACH AND TEMPORARY ROADWAY (1-LANE FLAG CONTROL).
D. CONSTRUCT REMAINING PORTION OF MUDD DRIVEWAYS CONFORMING TO THE EXISTING JELLYS FERRY ROAD.
E. CONSTRUCT TEMPORARY PAVING SECTION.

STAGE CONSTRUCTION PLAN

SCALE 1"=100'

SC-2

65% SUBMITTAL, NOT FOR CONSTRUCTION

REVISED BY	DATE REVISED
K. BEWSEY/ D. ZURCHER	KEITH RHODES
CALCULATED-DESIGNED BY	CHECKED BY
PROJECT ENGINEER	MICHAEL WOLOHAN

TEHAMA COUNTY DEPARTMENT OF PUBLIC WORKS

JELLYS FERRY IMPROVEMENT PROJECT

RELATIVE BORDER SCALE IS IN INCHES 0 1 2 3

XRef List: | 054-BRDR | 054-C-RD | 054-X-TP | 054-X-UTIL | 054-X-LANDNET | 054-Proposed ROW | 054-TEMP Road | 054-CONSTRUCTION ACCESS | 054-Drainage | 054-Corridor |
Apr 20, 2015 - 12:02:39 DWG Name: P:\710054 - Jellys Ferry Bridge\500_Engineering\510_Civil\511_CADD\SHEETS\054-SC.dwg Updated By: DZurcher

Dist.	COUNTY	ROUTE	POST MILE TOTAL PROJECT	SHEET No.	TOTAL SHEETS
2	TEH	JF		57	138

REGISTERED CIVIL ENGINEER DATE

PLANS APPROVAL DATE

REGISTERED PROFESSIONAL ENGINEER K. BEWSEY No. 71485 Exp. 12/31/15 CIVIL STATE OF CALIFORNIA

T.Y. LIN INTERNATIONAL OR ITS OFFICERS OR AGENTS SHALL NOT BE RESPONSIBLE FOR THE ACCURACY OR COMPLETENESS OF ELECTRONIC COPIES OF THIS PLAN SHEET.

T·Y·LIN INTERNATIONAL
1601 RESPONSE ROAD, SUITE 260
SACRAMENTO, CA 95815

NOTES:

1. SEE SHEET SC-1 FOR NOTES AND LEGEND.
2. TEMPORARY CONSTRUCTION ROADWAY AND MARINE ACCESS REMOVAL NOT SHOWN FOR CLARITY.

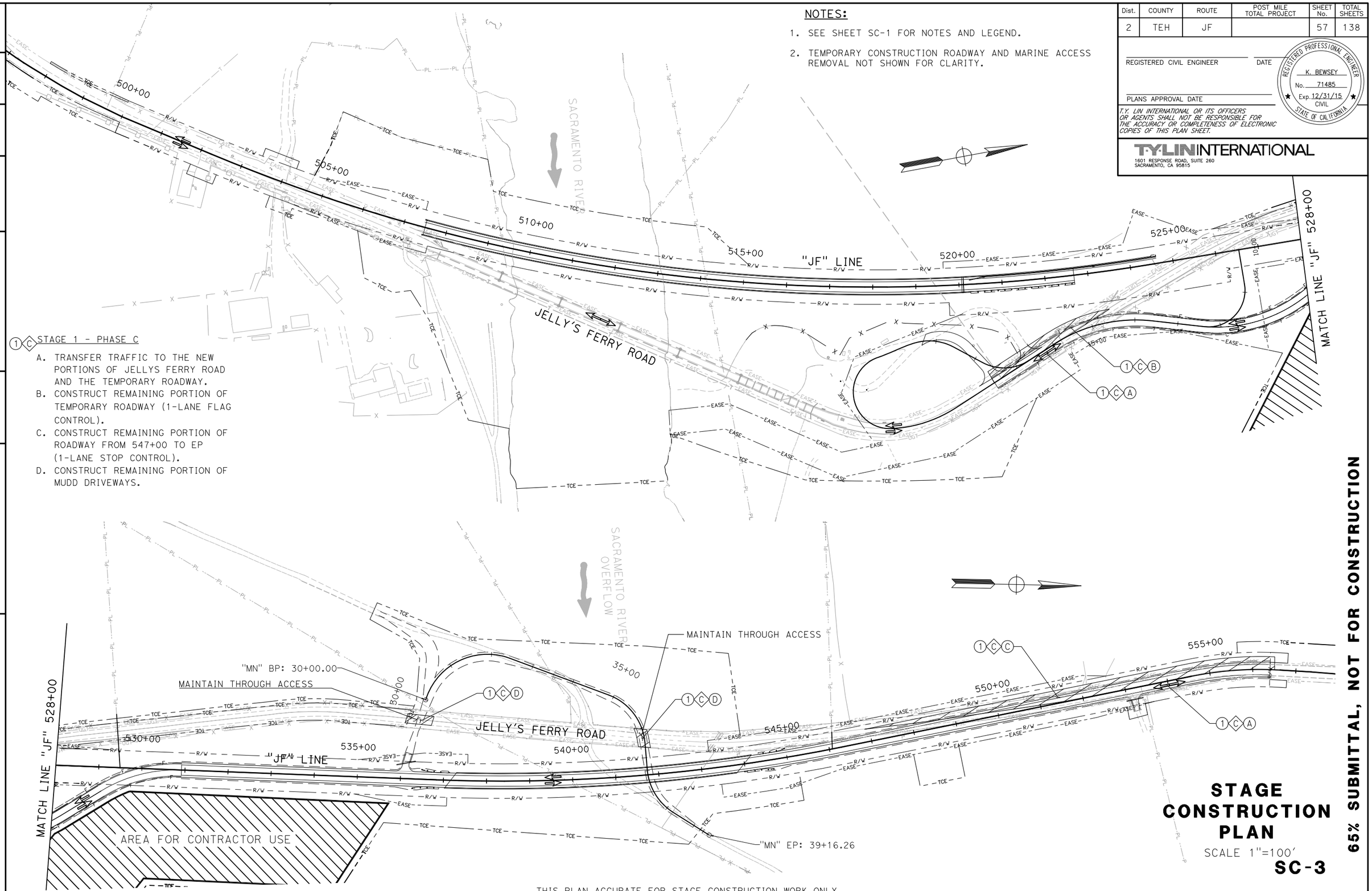

1 C STAGE 1 - PHASE C

A. TRANSFER TRAFFIC TO THE NEW PORTIONS OF JELLYS FERRY ROAD AND THE TEMPORARY ROADWAY.
B. CONSTRUCT REMAINING PORTION OF TEMPORARY ROADWAY (1-LANE FLAG CONTROL).
C. CONSTRUCT REMAINING PORTION OF ROADWAY FROM 547+00 TO EP (1-LANE STOP CONTROL).
D. CONSTRUCT REMAINING PORTION OF MUDD DRIVEWAYS.

THIS PLAN ACCURATE FOR STAGE CONSTRUCTION WORK ONLY

STAGE CONSTRUCTION PLAN

SCALE 1"=100'

SC-3

65% SUBMITTAL, NOT FOR CONSTRUCTION

REVISED BY	DATE REVISED
K. BEWSEY/ D. ZURCHER	KEITH RHODES
CALCULATED-DESIGNED BY	CHECKED BY
PROJECT ENGINEER	MICHAEL WOLOHAN

TEHAMA COUNTY DEPARTMENT OF PUBLIC WORKS

JELLYS FERRY IMPROVEMENT PROJECT

RELATIVE BORDER SCALE IS IN INCHES 0 1 2 3

XRef List: | 054-BRDR | 054-C-RD | 054-X-TP | 054-X-UTIL | 054-X-LANDNET | 054-Proposed ROW | 054-TEMP Road | 054-CONSTRUCTION ACCESS | 054-Drainage | 054-Corridor |
Apr 20, 2015 - 12:02:39 DWG Name: P:\710054 - Jellys Ferry Bridge\500_Engineering\510_Civil\511_CADD\SHEETS\054-SC.dwg Updated By: DZurcher

Dist.	COUNTY	ROUTE	POST MILE TOTAL PROJECT	SHEET No.	TOTAL SHEETS
2	TEH	JF		58	138

REGISTERED CIVIL ENGINEER DATE

PLANS APPROVAL DATE

REGISTERED PROFESSIONAL ENGINEER
K. BEWSEY
No. 71485
Exp. 12/31/15
CIVIL
STATE OF CALIFORNIA

T.Y. LIN INTERNATIONAL OR ITS OFFICERS OR AGENTS SHALL NOT BE RESPONSIBLE FOR THE ACCURACY OR COMPLETENESS OF ELECTRONIC COPIES OF THIS PLAN SHEET.

T·Y·LIN INTERNATIONAL
1601 RESPONSE ROAD, SUITE 260
SACRAMENTO, CA 95815

NOTES:

1. SEE SHEET SC-1 FOR NOTES AND LEGEND.
2. TEMPORARY CONSTRUCTION ROADWAY AND MARINE ACCESS REMOVAL NOT SHOWN FOR CLARITY.

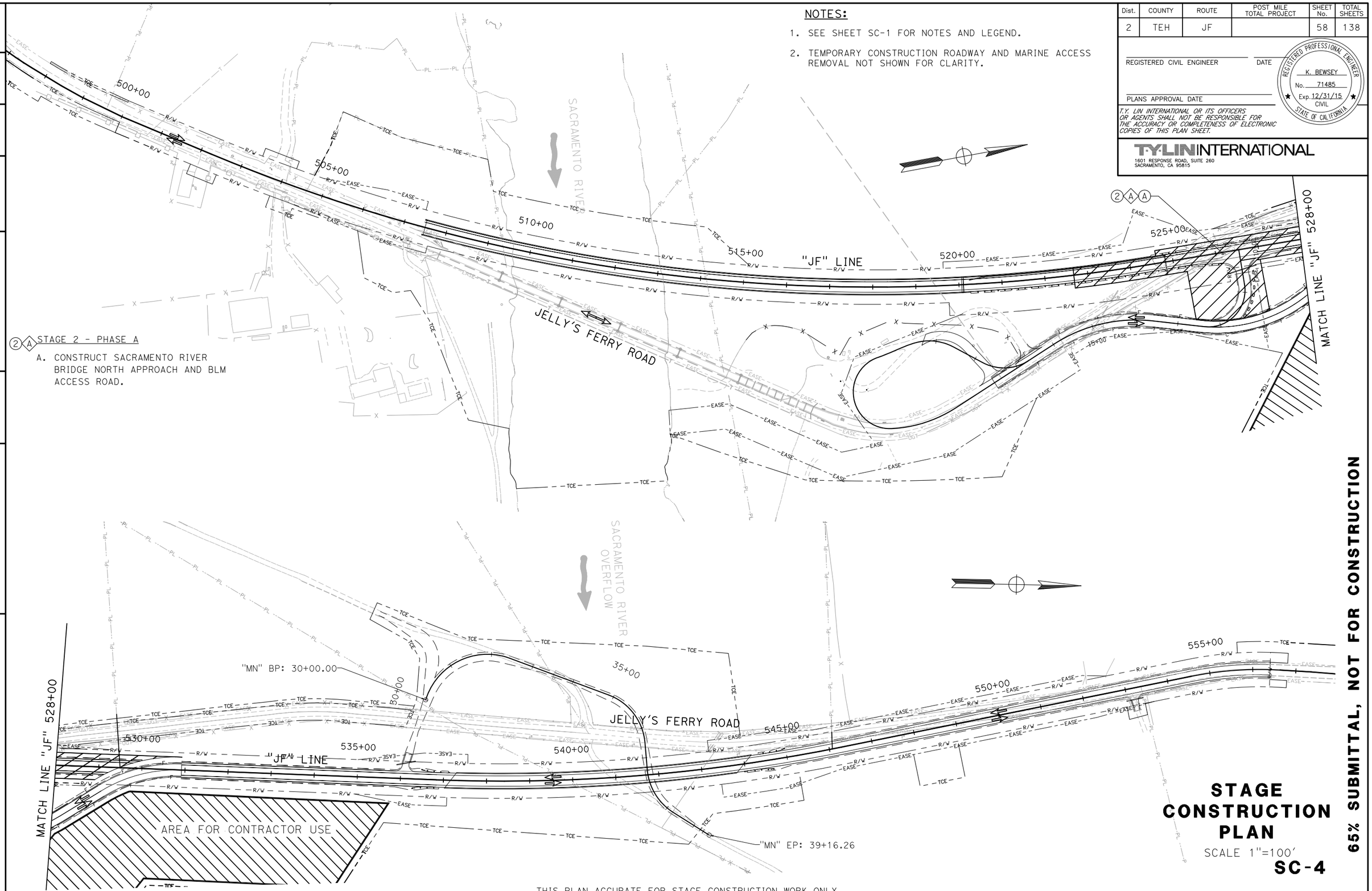

THIS PLAN ACCURATE FOR STAGE CONSTRUCTION WORK ONLY

STAGE CONSTRUCTION PLAN

SCALE 1"=100'

SC-4

65% SUBMITTAL, NOT FOR CONSTRUCTION

REVISED BY	DATE REVISED
K. BEWSEY/ D. ZURCHER	KEITH RHODES
CALCULATED-DESIGNED BY	CHECKED BY
PROJECT ENGINEER	
MICHAEL WOLOHAN	

TEHAMA COUNTY DEPARTMENT OF PUBLIC WORKS

JELLYS FERRY IMPROVEMENT PROJECT

RELATIVE BORDER SCALE IS IN INCHES 0 1 2 3

XRef List: | 054-BRDR | 054-C-RD | 054-X-TP | 054-X-UTIL | 054-X-LANDNET | 054-Proposed ROW | 054-TEMP Road | 054-CONSTRUCTION ACCESS | 054-Drainage | 054-Corridor |
Apr 20, 2015 - 12:02:39 DWG Name: P:\710054 - Jellys Ferry Bridge\500_Engineering\510_Civil\511_CADD\SHEETS\054-SC.dwg Updated By: DZurcher

Dist.	COUNTY	ROUTE	POST MILE TOTAL PROJECT	SHEET No.	TOTAL SHEETS
2	TEH	JF		59	138

REGISTERED CIVIL ENGINEER DATE

PLANS APPROVAL DATE

REGISTERED PROFESSIONAL ENGINEER K. BEWSEY No. 71485 Exp. 12/31/15 CIVIL STATE OF CALIFORNIA

T.Y. LIN INTERNATIONAL OR ITS OFFICERS OR AGENTS SHALL NOT BE RESPONSIBLE FOR THE ACCURACY OR COMPLETENESS OF ELECTRONIC COPIES OF THIS PLAN SHEET.

T·Y·LIN INTERNATIONAL
1601 RESPONSE ROAD, SUITE 260
SACRAMENTO, CA 95815

NOTES:

1. SEE SHEET SC-1 FOR NOTES AND LEGEND.
2. TEMPORARY CONSTRUCTION ROADWAY AND MARINE ACCESS REMOVAL NOT SHOWN FOR CLARITY.

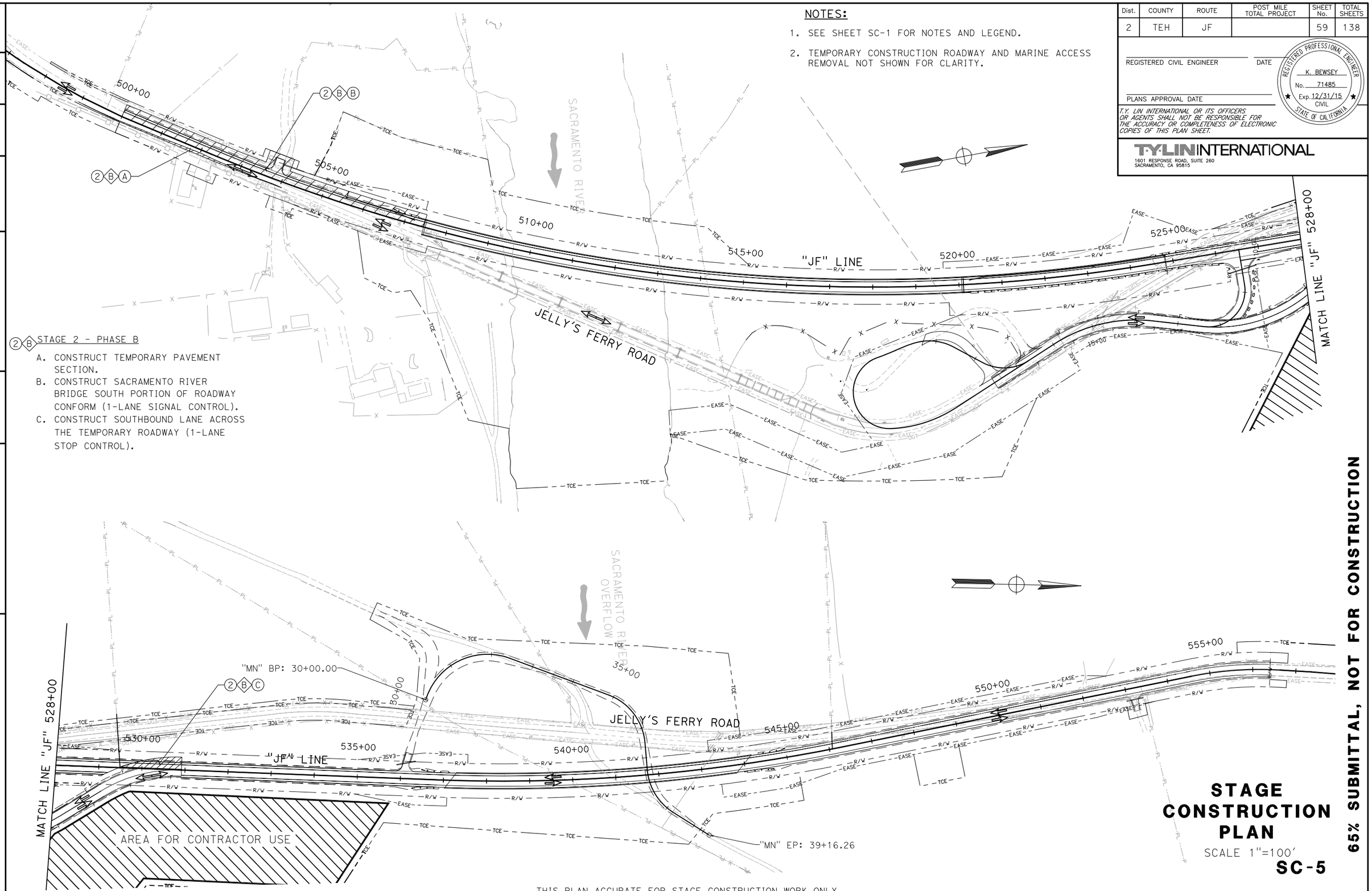

2 B STAGE 2 - PHASE B

A. CONSTRUCT TEMPORARY PAVEMENT SECTION.
B. CONSTRUCT SACRAMENTO RIVER BRIDGE SOUTH PORTION OF ROADWAY CONFORM (1-LANE SIGNAL CONTROL).
C. CONSTRUCT SOUTHBOUND LANE ACROSS THE TEMPORARY ROADWAY (1-LANE STOP CONTROL).

THIS PLAN ACCURATE FOR STAGE CONSTRUCTION WORK ONLY

STAGE CONSTRUCTION PLAN

SCALE 1"=100'

SC-5

65% SUBMITTAL, NOT FOR CONSTRUCTION

REVISED BY	DATE REVISED

RELATIVE BORDER SCALE IS IN INCHES 0 1 2 3

CALCULATED-DESIGNED BY	CHECKED BY
K. BEWSEY/ D. ZURCHER	KEITH RHODES

PROJECT ENGINEER: MICHAEL WOLOHAN

TEHAMA COUNTY DEPARTMENT OF PUBLIC WORKS

JELLYS FERRY IMPROVEMENT PROJECT

XRef List: | 054-BRDR | 054-C-RD | 054-X-TP | 054-X-UTIL | 054-X-LANDNET | 054-Proposed ROW | 054-TEMP Road | 054-CONSTRUCTION ACCESS | 054-Drainage | 054-Drainage |
Apr 20, 2015 - 12:02:39 DWG Name: P:\710054 - Jellys Ferry Bridge\500_Engineering\510_Civil\511_CADD\SHEETS\054-SC.dwg Updated By: DZurcher

Dist.	COUNTY	ROUTE	POST MILE TOTAL PROJECT	SHEET No.	TOTAL SHEETS
2	TEH	JF		60	138

REGISTERED CIVIL ENGINEER DATE

PLANS APPROVAL DATE

REGISTERED PROFESSIONAL ENGINEER
K. BEWSEY
No. 71485
Exp. 12/31/15
CIVIL
STATE OF CALIFORNIA

T.Y. LIN INTERNATIONAL OR ITS OFFICERS OR AGENTS SHALL NOT BE RESPONSIBLE FOR THE ACCURACY OR COMPLETENESS OF ELECTRONIC COPIES OF THIS PLAN SHEET.

T·Y·LIN INTERNATIONAL
1601 RESPONSE ROAD, SUITE 260
SACRAMENTO, CA 95815

NOTES:

1. SEE SHEETS SC-1 FOR NOTES AND LEGEND.
2. TEMPORARY CONSTRUCTION ROADWAY AND MARINE ACCESS NOT SHOWN FOR CLARITY.

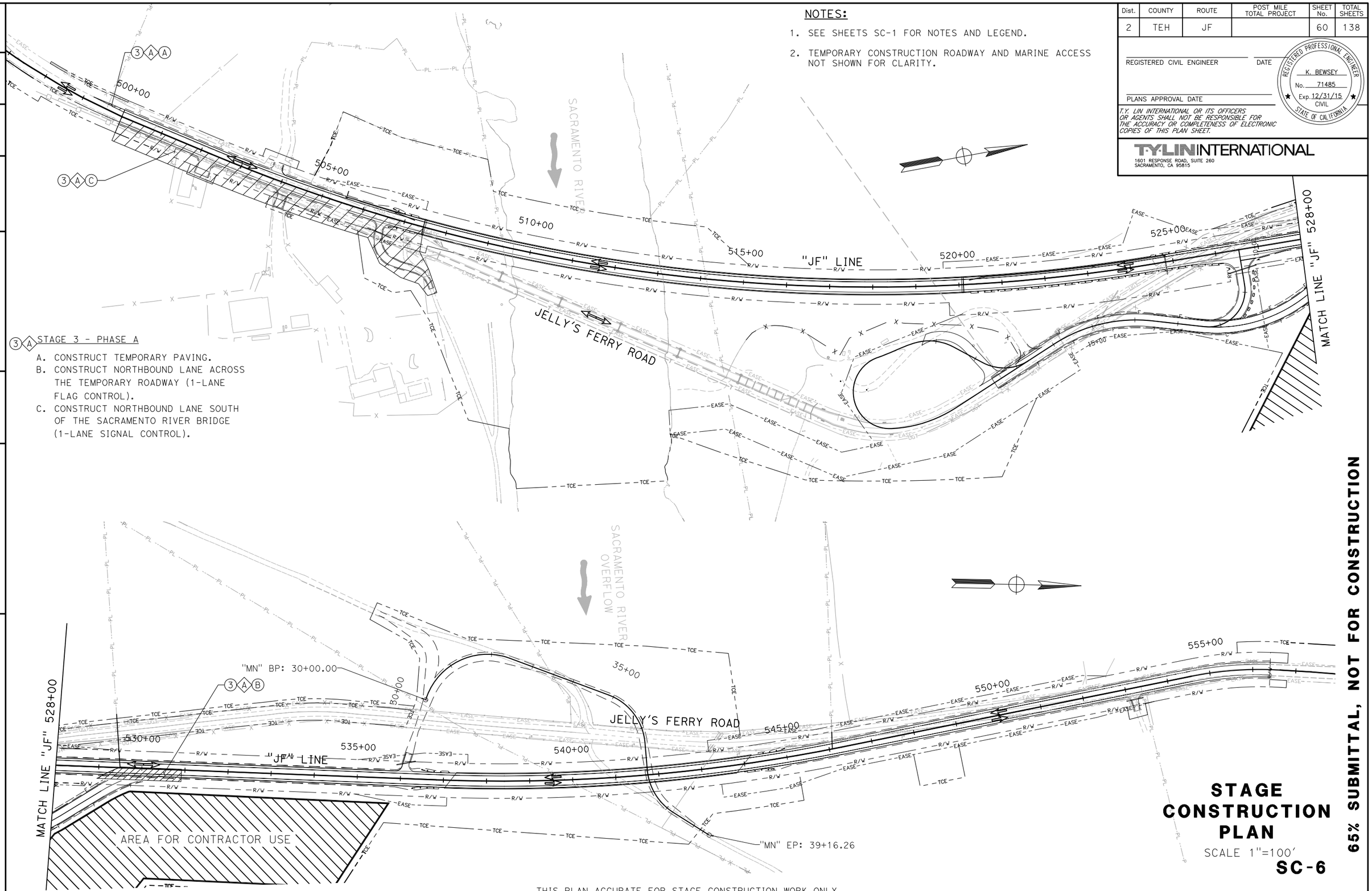

3 A STAGE 3 - PHASE A

A. CONSTRUCT TEMPORARY PAVING.
B. CONSTRUCT NORTHBOUND LANE ACROSS THE TEMPORARY ROADWAY (1-LANE FLAG CONTROL).
C. CONSTRUCT NORTHBOUND LANE SOUTH OF THE SACRAMENTO RIVER BRIDGE (1-LANE SIGNAL CONTROL).

THIS PLAN ACCURATE FOR STAGE CONSTRUCTION WORK ONLY

STAGE CONSTRUCTION PLAN

SCALE 1"=100'

SC-6

65% SUBMITTAL, NOT FOR CONSTRUCTION

REVISED BY	DATE REVISED

RELATIVE BORDER SCALE IS IN INCHES 0 1 2 3

CALCULATED-DESIGNED BY	CHECKED BY
K. BEWSEY/ D. ZURCHER	KEITH RHODES

PROJECT ENGINEER: MICHAEL WOLOHAN

TEHAMA COUNTY DEPARTMENT OF PUBLIC WORKS

JELLYS FERRY IMPROVEMENT PROJECT

XRef List: | 054-BRDR | 054-C-RD | 054-X-TP | 054-X-UTIL | 054-X-LANDNET | 054-Proposed ROW | 054-TEMP Road | 054-CONSTRUCTION ACCESS | 054-Drainage | 054-Corridor |
Apr 20, 2015 - 12:02:39 DWG Name: P:\710054 - Jellys Ferry Bridge\500_Engineering\510_Civil\511_CADD\SHEETS\054-SC.dwg Updated By: DZurcher

Dist.	COUNTY	ROUTE	POST MILE TOTAL PROJECT	SHEET No.	TOTAL SHEETS
2	TEH	JF		61	138

REGISTERED CIVIL ENGINEER DATE

PLANS APPROVAL DATE

REGISTERED PROFESSIONAL ENGINEER K. BEWSEY No. 71485 Exp. 12/31/15 CIVIL STATE OF CALIFORNIA

T.Y. LIN INTERNATIONAL OR ITS OFFICERS OR AGENTS SHALL NOT BE RESPONSIBLE FOR THE ACCURACY OR COMPLETENESS OF ELECTRONIC COPIES OF THIS PLAN SHEET.

T·Y·LIN INTERNATIONAL
1601 RESPONSE ROAD, SUITE 260
SACRAMENTO, CA 95815

NOTES:

1. SEE SHEET SC-1 FOR NOTES AND LEGEND.
2. TEMPORARY CONSTRUCTION ROADWAY REMOVAL NOT SHOWN FOR CLARITY.

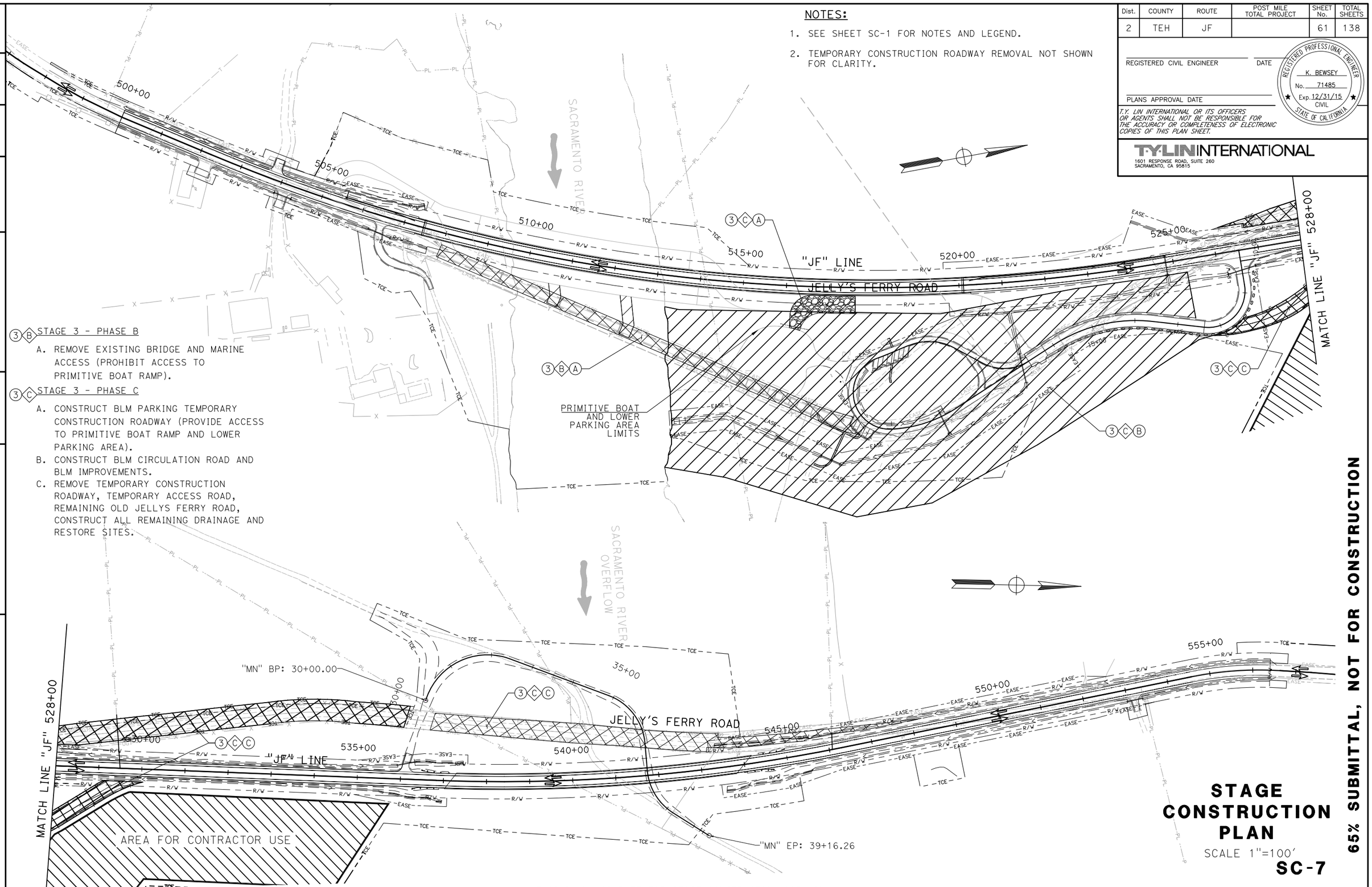

3 B STAGE 3 - PHASE B

A. REMOVE EXISTING BRIDGE AND MARINE ACCESS (PROHIBIT ACCESS TO PRIMITIVE BOAT RAMP).

3 C STAGE 3 - PHASE C

A. CONSTRUCT BLM PARKING TEMPORARY CONSTRUCTION ROADWAY (PROVIDE ACCESS TO PRIMITIVE BOAT RAMP AND LOWER PARKING AREA).
B. CONSTRUCT BLM CIRCULATION ROAD AND BLM IMPROVEMENTS.
C. REMOVE TEMPORARY CONSTRUCTION ROADWAY, TEMPORARY ACCESS ROAD, REMAINING OLD JELLYS FERRY ROAD, CONSTRUCT ALL REMAINING DRAINAGE AND RESTORE SITES.

STAGE CONSTRUCTION PLAN

SCALE 1"=100'

SC-7

THIS PLAN ACCURATE FOR STAGE CONSTRUCTION WORK ONLY

65% SUBMITTAL, NOT FOR CONSTRUCTION

REVISED BY	DATE REVISED

CALCULATED-DESIGNED BY	CHECKED BY
K. BEWSEY/ D. ZURCHER	KEITH RHODES

PROJECT ENGINEER: MICHAEL WOLOHAN

TEHAMA COUNTY DEPARTMENT OF PUBLIC WORKS

JELLYS FERRY IMPROVEMENT PROJECT

RELATIVE BORDER SCALE IS IN INCHES 0 1 2 3

XRef List: | 054-BRDR | 054-C-RD | 054-X-TP | 054-X-UTIL | 054-X-LANDNET | 054-Proposed ROW | 054-TEMP Road | 054-CONSTRUCTION ACCESS | 054-Drainage | 054-Corridor |
Apr. 20, 2015 - 12:02:39 DWG Name: P:\710054 - Jellys Ferry Bridge\500_Engineering\510_Civil\511_CADD\SHEETS\054-SC.dwg Updated By: DZurcher By: DZurcher

Dist.	COUNTY	ROUTE	POST MILE TOTAL PROJECT	SHEET No.	TOTAL SHEETS
2	TEH	JF		62	138

REGISTERED CIVIL ENGINEER DATE

PLANS APPROVAL DATE

REGISTERED PROFESSIONAL ENGINEER
K. BEWSEY
No. 71485
Exp. 12/31/15
CIVIL
STATE OF CALIFORNIA

T.Y. LIN INTERNATIONAL OR ITS OFFICERS OR AGENTS SHALL NOT BE RESPONSIBLE FOR THE ACCURACY OR COMPLETENESS OF ELECTRONIC COPIES OF THIS PLAN SHEET.

T·Y·LIN INTERNATIONAL
1601 RESPONSE ROAD, SUITE 260
SACRAMENTO, CA 95815

NOTES:

1. SEE SHEET SC-1 FOR NOTES AND LEGEND

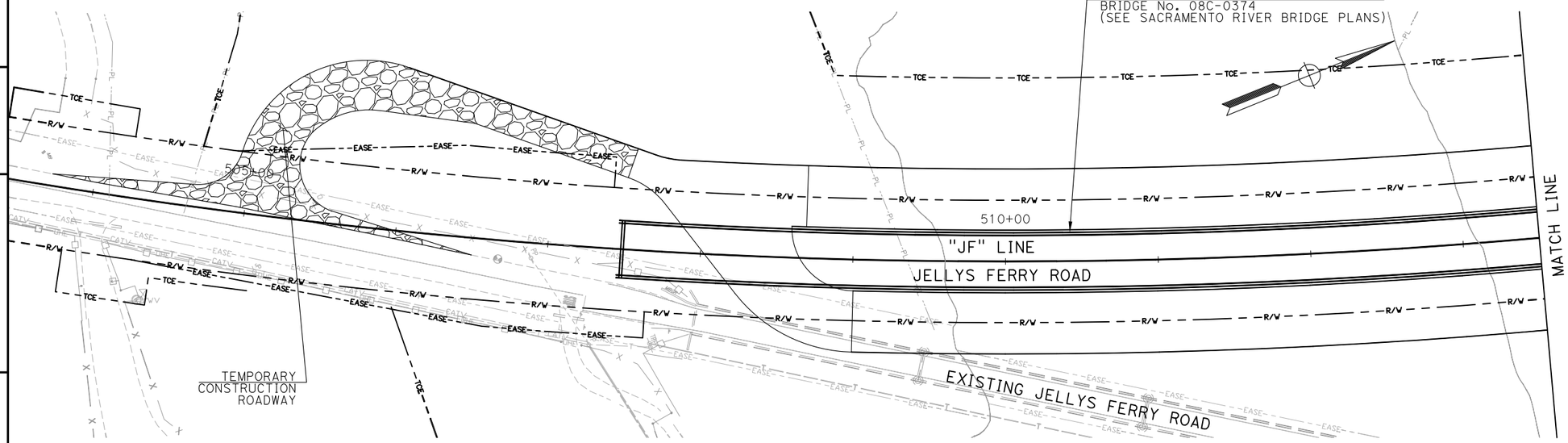

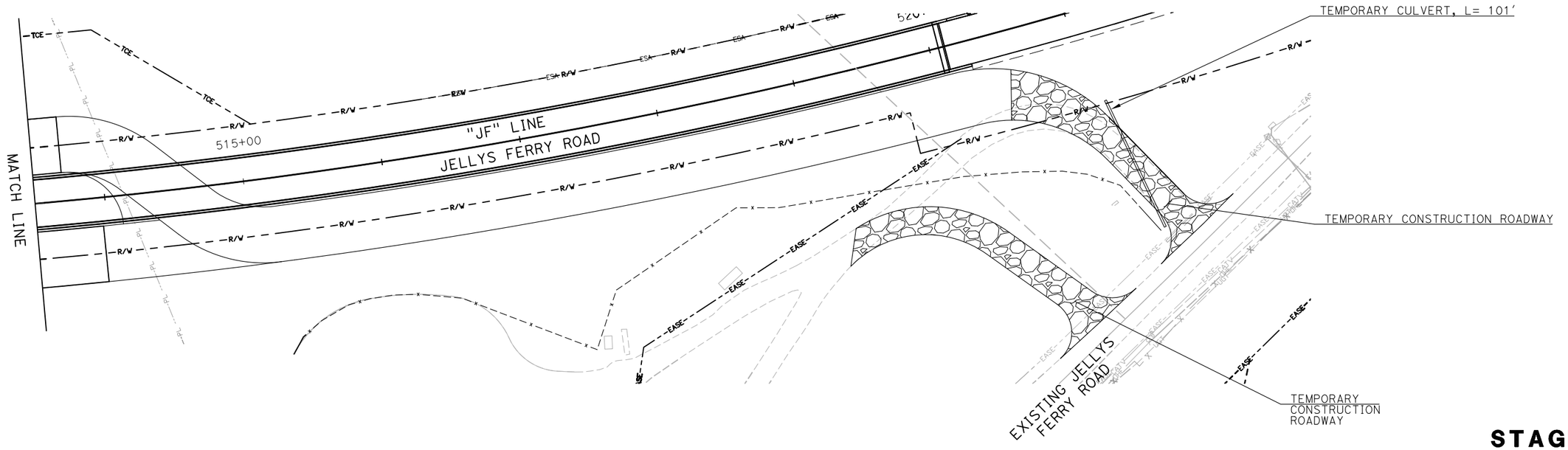

STAGE CONSTRUCTION DETAILS

SCALE: 1"=40'

SCD-1

65% SUBMITTAL, NOT FOR CONSTRUCTION

THIS PLAN ACCURATE FOR STAGE CONSTRUCTION WORK ONLY

RELATIVE BORDER SCALE IS IN INCHES 0 1 2 3

REVISED BY	DATE REVISED

CALCULATED-DESIGNED BY	CHECKED BY
K. BEWSEY/ D. ZURCHER	KEITH RHODES

PROJECT ENGINEER: MICHAEL WOLOHAN

TEHAMA COUNTY DEPARTMENT OF PUBLIC WORKS

JELLYS FERRY IMPROVEMENT PROJECT

XRef List: | 054-BRDR | 054-C-RD | 054-X-TP | 054-X-UTIL | 054-X-LANDNET | 054-Proposed ROW | 054-CONSTRUCTION ACCESS |
Mar. 20, 2015 – 12:14:09 DWG Name: P:\70034 – Jellys Ferry Bridge\500_Engineering\510_Civil\51_CADD\SHEETS\054-SCD-1.dwg Updated By: DZurcher

Dist.	COUNTY	ROUTE	POST MILE TOTAL PROJECT	SHEET No.	TOTAL SHEETS
2	TEH	JF		63	138

REGISTERED CIVIL ENGINEER DATE

PLANS APPROVAL DATE

REGISTERED PROFESSIONAL ENGINEER K. BEWSEY No. 71485 Exp. 12/31/15 CIVIL STATE OF CALIFORNIA

T.Y. LIN INTERNATIONAL OR ITS OFFICERS OR AGENTS SHALL NOT BE RESPONSIBLE FOR THE ACCURACY OR COMPLETENESS OF ELECTRONIC COPIES OF THIS PLAN SHEET.

T·Y·LIN INTERNATIONAL
1601 RESPONSE ROAD, SUITE 260
SACRAMENTO, CA 95815

NOTES:

1. ALL DIMENSIONS ARE IN FEET UNLESS OTHERWISE SHOWN.
2. FOR COMPLETE RIGHT OF WAY, SEE RIGHT OF WAY RECORD MAPS AT TEHAMA COUNTY.
3. ALL STATIONING IS ALONG THE "TS" LINE UNLESS OTHERWISE SPECIFIED.

LEGEND

- DRAINAGE SYSTEM
- DRAINAGE COMPONENT
- LINE NUMBER, SEE LINE TABLE
- CURVE NUMBER, SEE CURVE TABLE
- STRUCTURAL SECTION, SEE SHEET X-1
- CALTRANS DETAIL NUMBER
- BEGIN / END DELINEATION
- SHEET / DETAIL — CONSTRUCTION DETAIL
- HINGE
- FILL
- CUT
- RIGHT OF WAY
- TEMPORARY CONSTRUCTION EASEMENT
- METAL BEAM GUARD RAIL
- (E) WIRE FENCE
- (E) WOOD FENCE
- (E) FLOWLINE
- (E) UNDERGROUND ELECTRIC
- (E) OVERHEAD ELECTRIC
- (E) UNDERGROUND TELEPHONE
- (E) OVERHEAD TELEPHONE
- (E) OVERHEAD CABLE
- (E) GUY WIRE
- (E) JOINT, POWER, OR TELEPHONE POLE

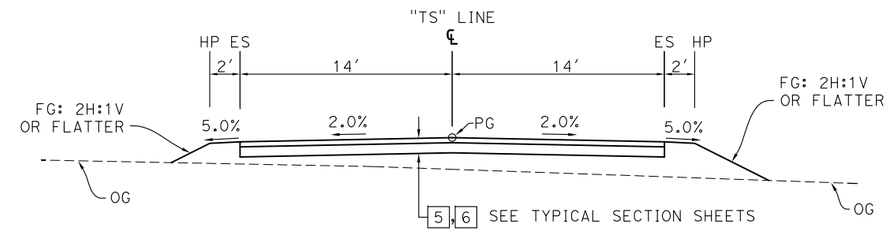

"TS" 140+00.00 to 151+11.53

TEMPORARY SOUTH DETOUR

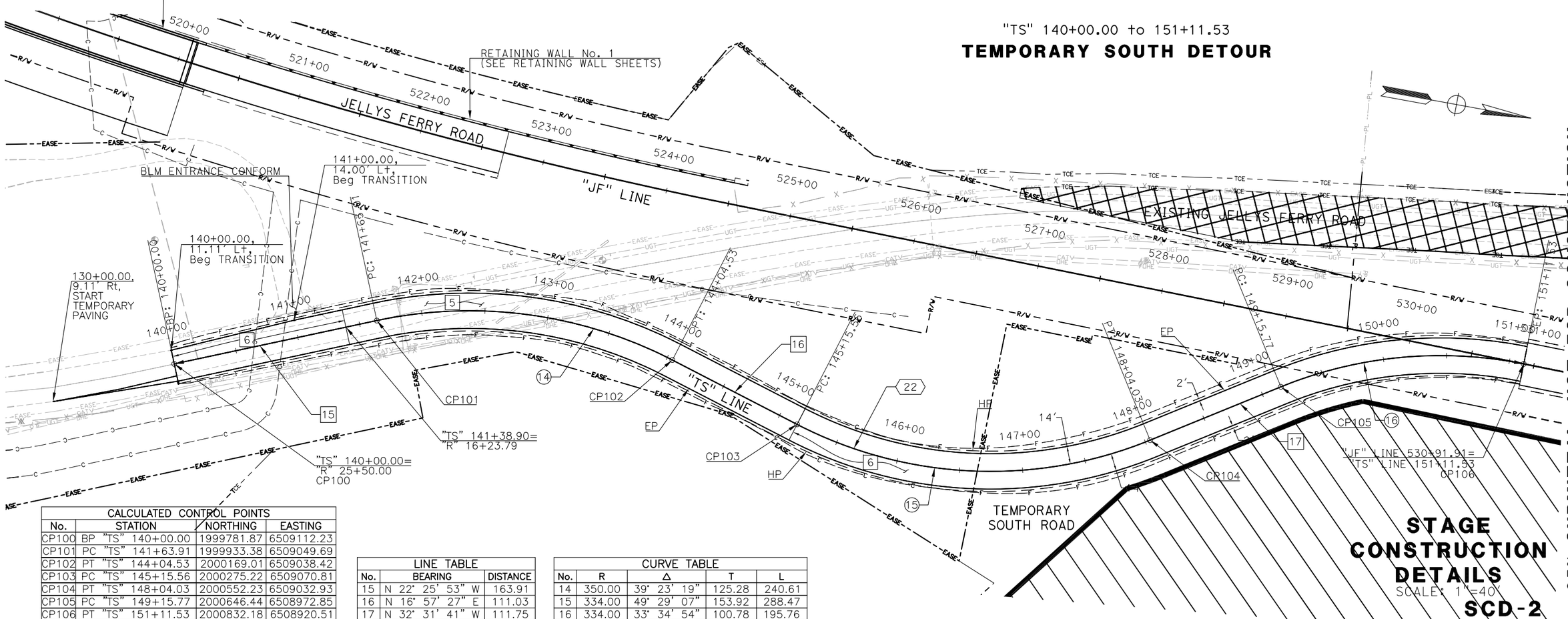

CALCULATED CONTROL POINTS				
No.	STATION		NORTHING	EASTING
CP100	BP	"TS" 140+00.00	1999781.87	6509112.23
CP101	PC	"TS" 141+63.91	1999933.38	6509049.69
CP102	PT	"TS" 144+04.53	2000169.01	6509038.42
CP103	PC	"TS" 145+15.56	2000275.22	6509070.81
CP104	PT	"TS" 148+04.03	2000552.23	6509032.93
CP105	PC	"TS" 149+15.77	2000646.44	6508972.85
CP106	PT	"TS" 151+11.53	2000832.18	6508920.51

LINE TABLE		
No.	BEARING	DISTANCE
15	N 22° 25' 53" W	163.91
16	N 16° 57' 27" E	111.03
17	N 32° 31' 41" W	111.75

CURVE TABLE				
No.	R	Δ	T	L
14	350.00	39° 23' 19"	125.28	240.61
15	334.00	49° 29' 07"	153.92	288.47
16	334.00	33° 34' 54"	100.78	195.76

THIS PLAN ACCURATE FOR STAGE CONSTRUCTION WORK ONLY

STAGE CONSTRUCTION DETAILS

SCALE: 1"=40'

SCD-2

65% SUBMITTAL, NOT FOR CONSTRUCTION

REVISED BY	DATE REVISED

RELATIVE BORDER SCALE IS IN INCHES 0 1 2 3

CALCULATED-DESIGNED BY	CHECKED BY
K. BEWSEY/ D. ZURCHER	KEITH RHODES

PROJECT ENGINEER: MICHAEL WOLOHAN

TEHAMA COUNTY DEPARTMENT OF PUBLIC WORKS

JELLYS FERRY IMPROVEMENT PROJECT

XRef List: | 054-BRDR | 054-C-RD | 054-X-TP | 054-X-UTIL | 054-X-LANDNET | 054-Proposed ROW | 054-TEMP Road |
Mar. 20, 2015 – 12:28:33 DWG Name: P:\70054 – Jellys Ferry Bridge\300_Engineering\510_Civil\11_CADD\SHEETS\054-SCD-2.dwg Updated By: DZurcher

Dist.	COUNTY	ROUTE	POST MILE TOTAL PROJECT	SHEET No.	TOTAL SHEETS
2	TEH	JF		64	138

REGISTERED CIVIL ENGINEER DATE

PLANS APPROVAL DATE

REGISTERED PROFESSIONAL ENGINEER
K. BEWSEY
No. 71485
Exp. 12/31/15
CIVIL
STATE OF CALIFORNIA

T.Y. LIN INTERNATIONAL OR ITS OFFICERS OR AGENTS SHALL NOT BE RESPONSIBLE FOR THE ACCURACY OR COMPLETENESS OF ELECTRONIC COPIES OF THIS PLAN SHEET.

T·Y·LIN INTERNATIONAL
1601 RESPONSE ROAD, SUITE 260
SACRAMENTO, CA 95815

NOTES:

1. SEE TH-1 FOR NOTES AND LEGEND.

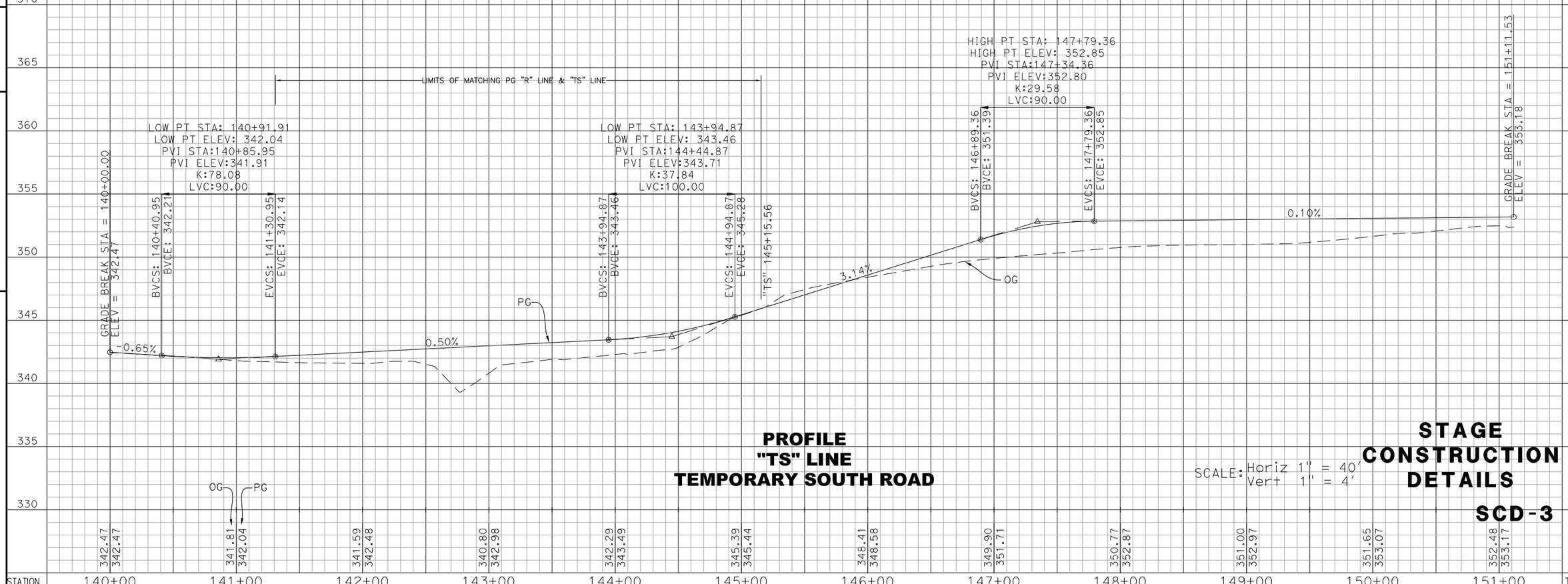

PROFILE
"TS" LINE
TEMPORARY SOUTH ROAD

SCALE: Horiz 1" = 40'
Vert 1" = 4'

STAGE CONSTRUCTION DETAILS

SCD-3

65% SUBMITTAL, NOT FOR CONSTRUCTION

RELATIVE BORDER SCALE IS IN INCHES 0 1 2 3

REVISED BY	DATE REVISED
K. BEWSEY/ D. ZURCHER	KEITH RHODES

CALCULATED-DESIGNED BY	CHECKED BY

PROJECT ENGINEER: MICHAEL WOLOHAN

TEHAMA COUNTY DEPARTMENT OF PUBLIC WORKS
JELLYS FERRY IMPROVEMENT PROJECT

XRef List: | 054-BRDR | 054-C-RD | 054-X-TP | 054-X-UTIL | 054-X-LANDNET | 054-Proposed ROW |
Mar. 20, 2015 - 12:36:03 DWG Name: P:\Y10054 - Jellys Ferry Bridge\300_Engineering\310_Civil\511_CADD\SHEETS\054-SCD-3.dwg Updated By: DZurcher

Dist.	COUNTY	ROUTE	POST MILE TOTAL PROJECT	SHEET No.	TOTAL SHEETS
2	TEH	JF		65	138

REGISTERED CIVIL ENGINEER DATE

PLANS APPROVAL DATE

REGISTERED PROFESSIONAL ENGINEER
K. BEWSEY
No. 71485
Exp. 12/31/15
CIVIL
STATE OF CALIFORNIA

T.Y. LIN INTERNATIONAL OR ITS OFFICERS OR AGENTS SHALL NOT BE RESPONSIBLE FOR THE ACCURACY OR COMPLETENESS OF ELECTRONIC COPIES OF THIS PLAN SHEET.

T·Y·LIN INTERNATIONAL
1601 RESPONSE ROAD, SUITE 260
SACRAMENTO, CA 95815

NOTES:

1. SEE SHEET SC-1 FOR NOTES AND LEGEND

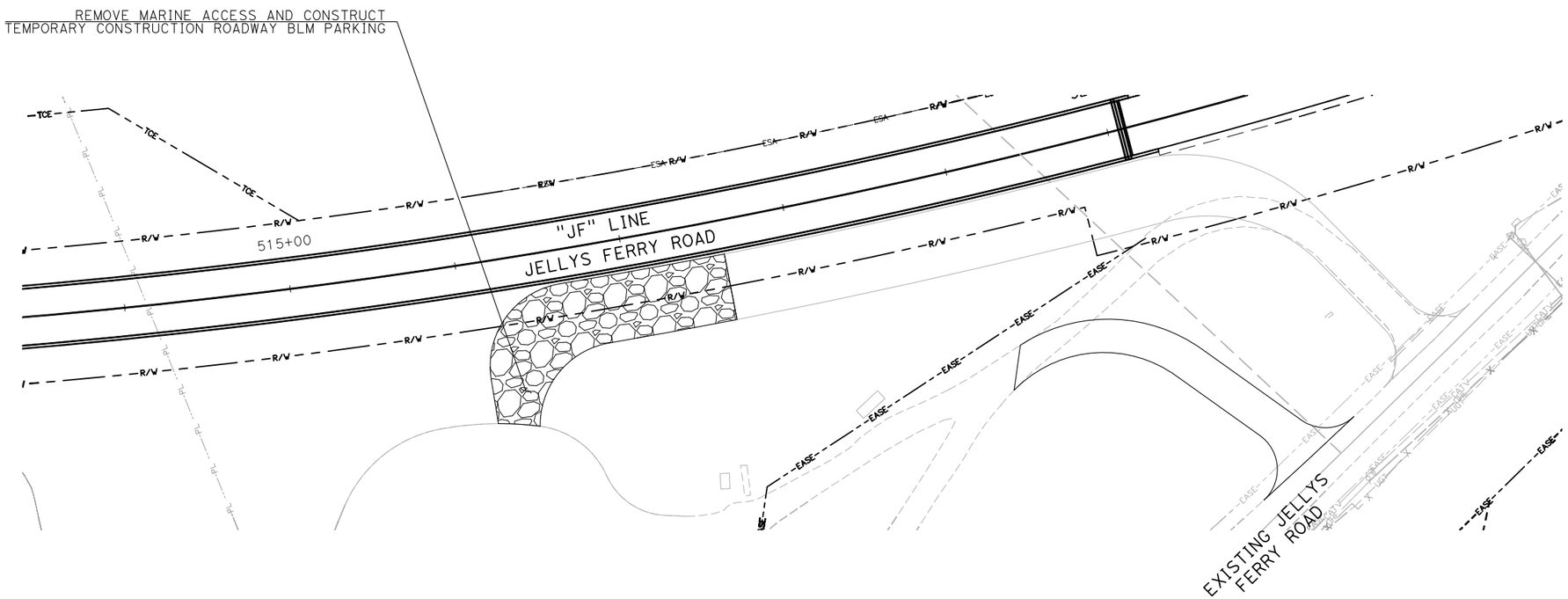

STAGE CONSTRUCTION DETAILS

SCALE: 1"=40'

SCD-4

65% SUBMITTAL, NOT FOR CONSTRUCTION

THIS PLAN ACCURATE FOR STAGE CONSTRUCTION WORK ONLY

REVISED BY	DATE REVISED

CALCULATED-DESIGNED BY	CHECKED BY
K. BEWSEY/ D. ZURCHER	KEITH RHODES

PROJECT ENGINEER
MICHAEL WOLOHAN

TEHAMA COUNTY DEPARTMENT OF PUBLIC WORKS

JELLYS FERRY IMPROVEMENT PROJECT

RELATIVE BORDER SCALE IS IN INCHES 0 1 2 3

XRef List: | 054-BRDR | 054-C-RD | 054-X-TP | 054-X-UTIL | 054-X-LANDNET | 054-Proposed ROW | 054-CONSTRUCTION ACCESS |
Mar. 20, 2015 - 12:39:15 DWG Name: P:\710054 - Jellys Ferry Bridge\500_Engineering\310_Civil\311_CADD\SHEETS\054-SCD-4.dwg Updated By: DZurcher

Dist.	COUNTY	ROUTE	POST MILE TOTAL PROJECT	SHEET No.	TOTAL SHEETS
2	TEH	JF		66	138

REGISTERED CIVIL ENGINEER DATE

PLANS APPROVAL DATE

REGISTERED PROFESSIONAL ENGINEER K. BEWSEY No. 71485 Exp. 12/31/15 CIVIL STATE OF CALIFORNIA

T.Y. LIN INTERNATIONAL OR ITS OFFICERS OR AGENTS SHALL NOT BE RESPONSIBLE FOR THE ACCURACY OR COMPLETENESS OF ELECTRONIC COPIES OF THIS PLAN SHEET.

T·Y·LIN INTERNATIONAL
1601 RESPONSE ROAD, SUITE 260
SACRAMENTO, CA 95815

NOTES:

1. SEE SHEET TH-1 FOR NOTES.

TEMPORARY MISCELLANEOUS QUANTITIES

SHEET No.	STATION	LOCATION	TEMPORARY MSE WALL	TEMPORARY CULVERT	TEMPORARY FENCE (TYPE CL-6)	TEMPORARY CONSTRUCTION ROADWAY	TEMPORARY PAVEMENT MARKING (PAINT)
			LS	LF	LF	SY	LF
SC-1	"JF" 515+14.89 TO 521+23.15	R+			700		
SC-2	"JF" 545+25.00 TO 555+50.00	C+r	X				
SC-5	"JF" 500+50.00 TO 506+50.00	C+r	X				
SCD-1	"JF" 503+72.15 TO 507+55.35	L+				1141	
	"JF" 519+10.11 TO 520+95.80	R+				508	
	"JF" 520+43.74 TO 521+77.76	R+				507	
	"JF" 521+11.11 TO 521+26.60	R+		101			
SCD-2	"TS" 140+00.00 TO 151+11.53	C+r					2222
SCD-4	"JF" 516+11.12 TO 517+60.02	R+				774	
		TOTAL	1	101	700	2930	2222

TEMPORARY ROADWAY QUANTITIES

SHEET No.	LOCATION	TEMPORARY HMA (TYPE A)	TEMPORARY AB (CLASS 2)
		TON	CY
SC-1	"JF" 545+85.26 TO 550+96.15	23.2	22.9
	"JF" 552+76.09 TO 554+35.17	2.3	2.3
	"JF" 555+81.05 TO 557+04.28	3.3	3.2
SC-2	"JF" 556+40.00 TO 557+12.61	3.9	3.9
SC-5	"JF" 498+94.85 TO 504+04.89	33.3	32.9
SC-6	"JF" 449+21.17 TO 500+00.00	5.4	5.4
SCD-2	"TS" 145+15.56 TO 151+11.53	417.2	412.0
	TOTAL	488.6	481.7

LEGEND

CONSTRUCT THIS PHASE

TEMPORARY CONSTRUCTION THIS PHASE

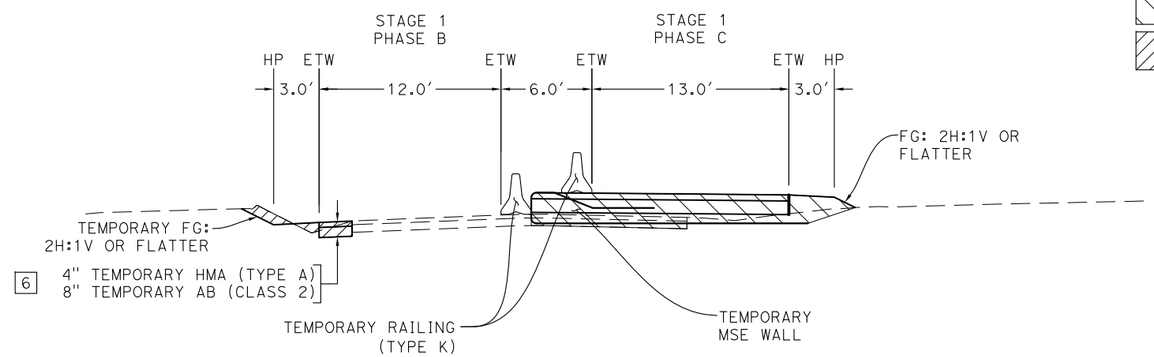

"JF" 545+50 to 556+00

JELLYS FERRY ROAD

TYPICAL CROSS SECTION - STAGE 1 - PHASE B

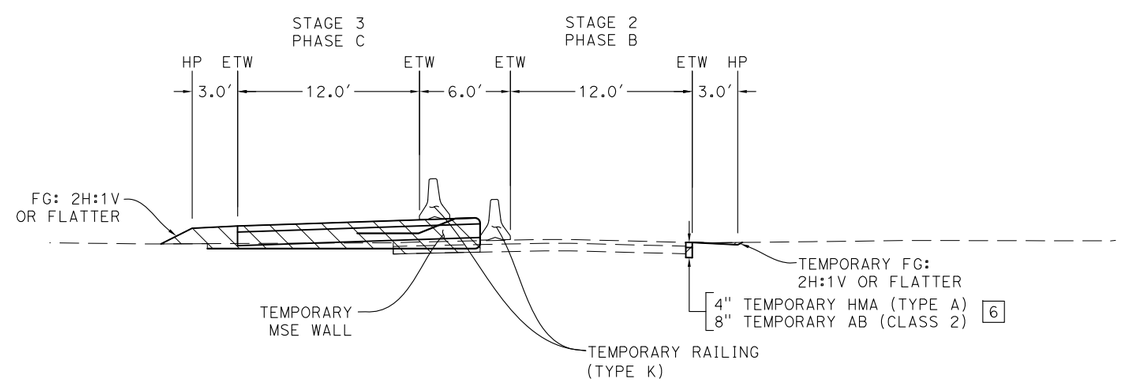

"JF" 501+50 to 506+00

JELLYS FERRY ROAD

TYPICAL CROSS SECTION - STAGE 2 - PHASE B

STAGE CONSTRUCTION DETAILS

NO SCALE

SCD-5

65% SUBMITTAL, NOT FOR CONSTRUCTION

RELATIVE BORDER SCALE IS IN INCHES 0 1 2 3

REVISED BY	DATE REVISED

K. BEWSEY/ D. ZURCHER	KEITH RHODES
CALCULATED-DESIGNED BY	CHECKED BY

PROJECT ENGINEER: MICHAEL WOLOHAN

TEHAMA COUNTY DEPARTMENT OF PUBLIC WORKS

JELLYS FERRY IMPROVEMENT PROJECT

XRef List: | 054-BRDR |
Mar. 20, 2015 - 12:43:28 DWG Name: P:\710054 - Jellys Ferry Bridge\500_Engineering\510_Civil\511_CADD\SHEETS\054-SCD-5.dwg Updated By: DZurcher

Dist.	COUNTY	ROUTE	POST MILE TOTAL PROJECT	SHEET No.	TOTAL SHEETS
2	TEH	JF		67	138

REGISTERED CIVIL ENGINEER DATE

PLANS APPROVAL DATE

REGISTERED PROFESSIONAL ENGINEER K. BEWSEY No. 71485 Exp. 12/31/15 CIVIL STATE OF CALIFORNIA

T.Y. LIN INTERNATIONAL OR ITS OFFICERS OR AGENTS SHALL NOT BE RESPONSIBLE FOR THE ACCURACY OR COMPLETENESS OF ELECTRONIC COPIES OF THIS PLAN SHEET.

T·Y·LIN INTERNATIONAL
1601 RESPONSE ROAD, SUITE 260
SACRAMENTO, CA 95815

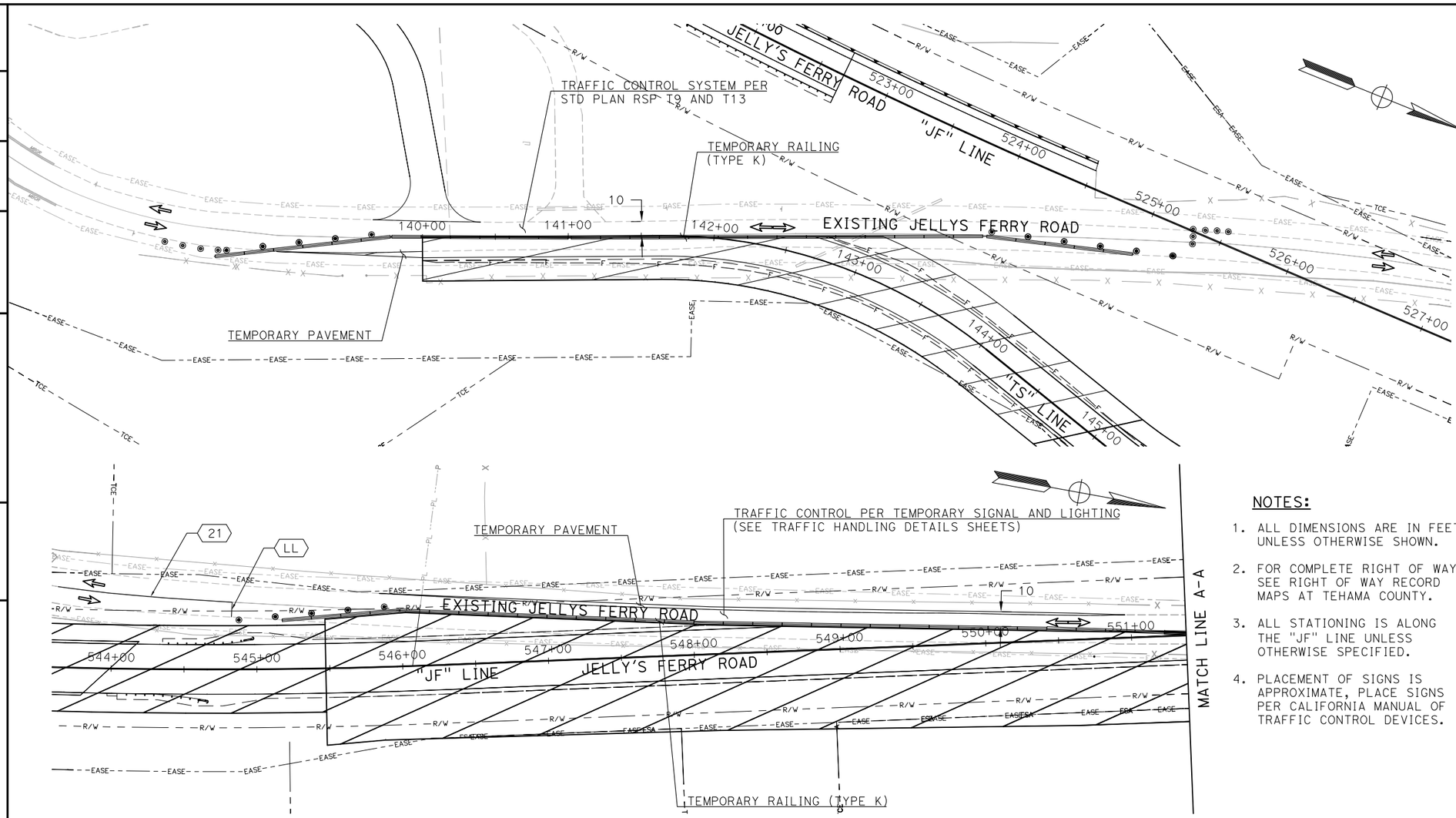

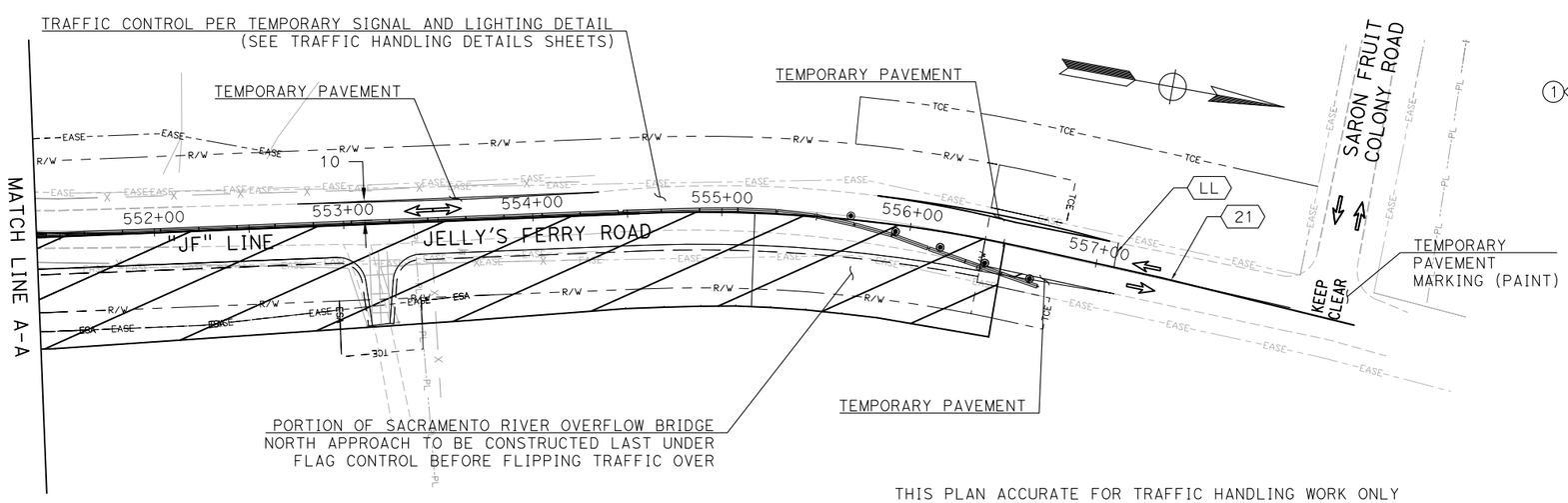

THIS PLAN ACCURATE FOR TRAFFIC HANDLING WORK ONLY

LEGEND

- HINGE
- FILL
- CUT
- RIGHT OF WAY
- TEMPORARY CONSTRUCTION EASEMENT
- METAL BEAM GUARD RAIL
- (E) WIRE FENCE
- (E) WOOD FENCE
- (E) FLOWLINE
- TEMPORARY RAILING (TYPE K)
- TEMPORARY CRASH CUSHION ARRAY (TU11)
- TEMPORARY CRASH CUSHION (NARROW)
- ROADSIDE SIGN (N)
- CHANNELIZER (SURFACE MOUNTED)
- TYPE III BARRICADE
- LL — CALTRANS LIMIT LINE
- TEMPORARY PAVEMENT MARKER (PAINT)
- # — CALTRANS DETAIL NUMBER
- TEMPORARY TRAFFIC STRIPE (PAINT)
- # — STAGE OF CONSTRUCTION
- # — PHASE OF CONSTRUCTION
- ITEM OF CONSTRUCTION
- DIRECTION OF TRAFFIC FLOW
- CONSTRUCT THIS PHASE
- REMOVE THIS PHASE

NOTES:

1. ALL DIMENSIONS ARE IN FEET UNLESS OTHERWISE SHOWN.
2. FOR COMPLETE RIGHT OF WAY, SEE RIGHT OF WAY RECORD MAPS AT TEHAMA COUNTY.
3. ALL STATIONING IS ALONG THE "JF" LINE UNLESS OTHERWISE SPECIFIED.
4. PLACEMENT OF SIGNS IS APPROXIMATE, PLACE SIGNS PER CALIFORNIA MANUAL OF TRAFFIC CONTROL DEVICES.

(1)(B) STAGE 1 - PHASE B

A. CONSTRUCT SACRAMENTO RIVER OVERFLOW BRIDGE WITH FALSEWORK OPENING FOR VEHICLE ACCESS AT MUDD NORTH ROAD.
B. CONSTRUCT SACRAMENTO RIVER OVERFLOW BRIDGE NORTH APPROACH. (1-LANE SIGNAL CONTROL).
C. CONSTRUCT SACRAMENTO RIVER OVERFLOW BRIDGE SOUTH APPROACH AND TEMPORARY ROADWAY (1-LANE FLAG CONTROL).
D. CONSTRUCT REMAINING PORTION OF MUDD DRIVEWAYS CONFORMING TO THE EXISTING JELLYS FERRY ROAD.

TRAFFIC HANDLING PLAN

SCALE 1"=40'

TH-1

65% SUBMITTAL, NOT FOR CONSTRUCTION

RELATIVE BORDER SCALE IS IN INCHES 0 1 2 3

REVISED BY	DATE REVISED

CALCULATED-DESIGNED BY: K. BEWSEY/ D. ZURCHER
CHECKED BY: KEITH RHODES

PROJECT ENGINEER: MICHAEL WOLOHAN

TEHAMA COUNTY DEPARTMENT OF PUBLIC WORKS
JELLYS FERRY IMPROVEMENT PROJECT

XRef List: | 054-BRDR | 054-C-RD | 054-X-TP | 054-X-LANDNET | 054-Proposed ROW | 054-TEMP Road |
Mar. 20, 2015 - 12:54:56 DWG Name: P:\710054 - Jellys Ferry Bridge\500_Engineering\510_Civil\511_CADD\SHEETS\054-TH-1.dwg Updated By: DZurcher

Dist.	COUNTY	ROUTE	POST MILE TOTAL PROJECT	SHEET No.	TOTAL SHEETS
2	TEH	JF		68	138

REGISTERED CIVIL ENGINEER DATE

PLANS APPROVAL DATE

REGISTERED PROFESSIONAL ENGINEER K. BEWSEY No. 71485 Exp. 12/31/15 CIVIL STATE OF CALIFORNIA

T.Y. LIN INTERNATIONAL OR ITS OFFICERS OR AGENTS SHALL NOT BE RESPONSIBLE FOR THE ACCURACY OR COMPLETENESS OF ELECTRONIC COPIES OF THIS PLAN SHEET.

T·Y·LIN INTERNATIONAL
1601 RESPONSE ROAD, SUITE 260
SACRAMENTO, CA 95815

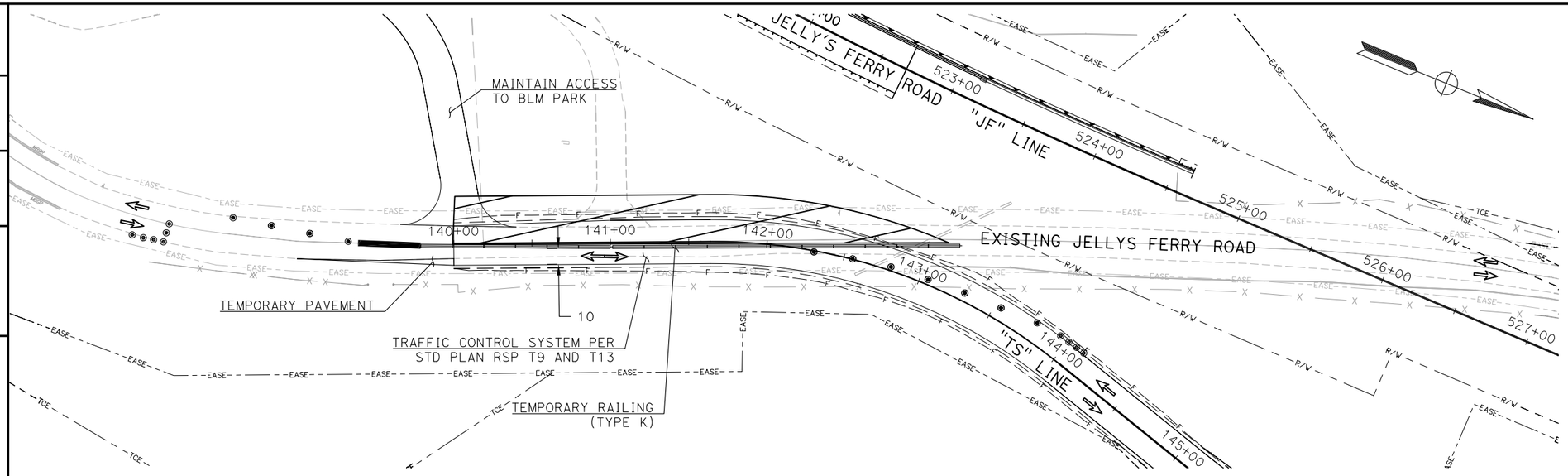

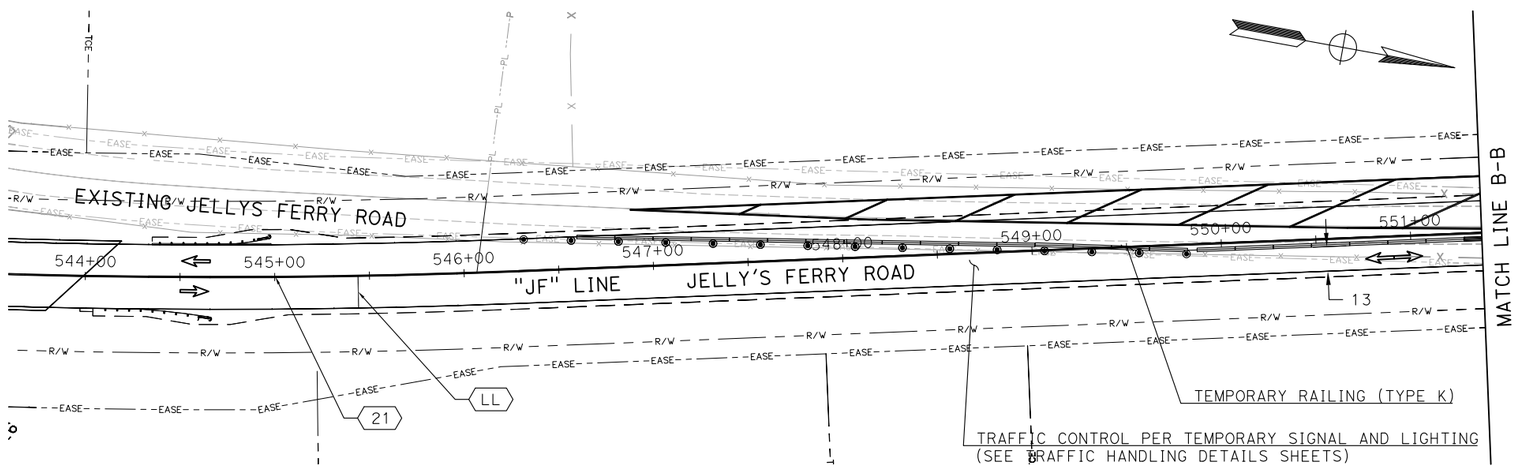

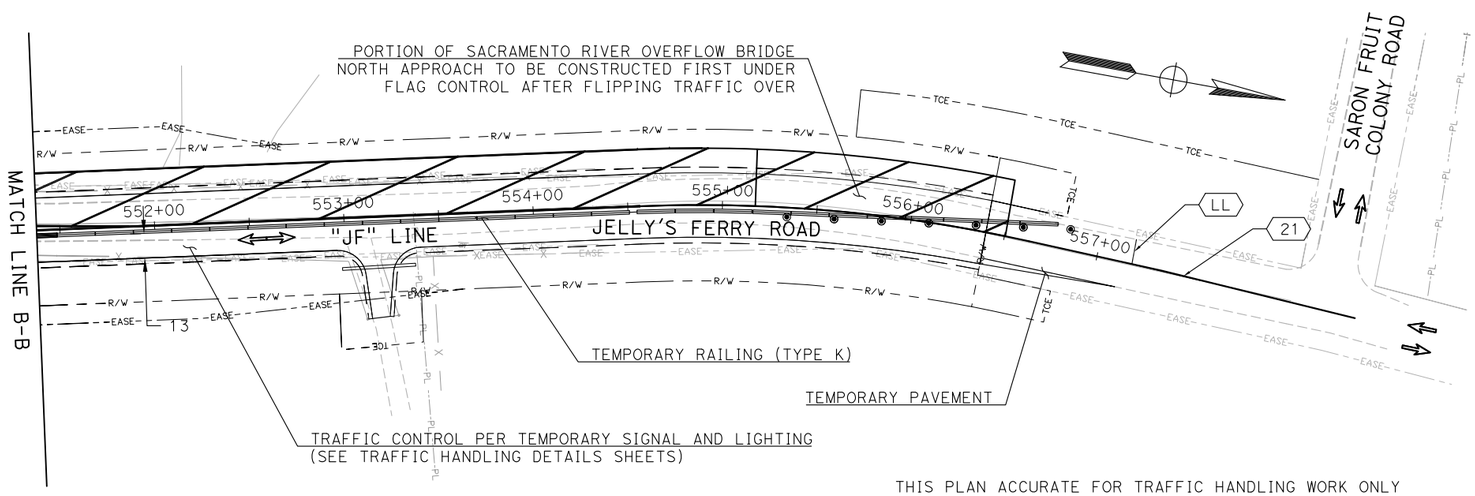

NOTES:

1. SEE SHEET TH-1 FOR NOTES AND LEGEND

(1)(C) STAGE 1 - PHASE C

A. TRANSFER TRAFFIC TO THE NEW PORTIONS OF JELLYS FERRY ROAD AND THE TEMPORARY ROADWAY.
B. CONSTRUCT REMAINING PORTION OF TEMPORARY ROADWAY (1-LANE FLAG CONTROL).
C. CONSTRUCT REMAINING PORTION OF ROADWAY FROM 547+00 TO EP (1-LANE STOP CONTROL).
D. CONSTRUCT REMAINING PORTION OF MUDD DRIVEWAYS.

TRAFFIC HANDLING PLAN

SCALE 1"=40'

TH-2

65% SUBMITTAL, NOT FOR CONSTRUCTION

THIS PLAN ACCURATE FOR TRAFFIC HANDLING WORK ONLY

REVISED BY	DATE REVISED

RELATIVE BORDER SCALE IS IN INCHES 0 1 2 3

CALCULATED-DESIGNED BY: K. BEWSEY/ D. ZURCHER
CHECKED BY: KEITH RHODES
PROJECT ENGINEER: MICHAEL WOLOHAN

TEHAMA COUNTY DEPARTMENT OF PUBLIC WORKS
JELLYS FERRY IMPROVEMENT PROJECT

XRef List: | 054-BRDR | 054-C-RD | 054-X-TP | 054-X-LANDNET | 054-Proposed ROW | 054-TEMP Road | 054-Drainage |
Mar. 20, 2015 - 12:57:02 DWG Name: P:\710054 - Jellys Ferry Bridge\500_Engineering\510_Civil\511_CADD\SHEETS\054-TH-2.dwg Updated By: DZurcher

Dist.	COUNTY	ROUTE	POST MILE TOTAL PROJECT	SHEET No.	TOTAL SHEETS
2	TEH	JF		69	138

REGISTERED CIVIL ENGINEER DATE

PLANS APPROVAL DATE

REGISTERED PROFESSIONAL ENGINEER
K. BEWSEY
No. 71485
Exp. 12/31/15
CIVIL
STATE OF CALIFORNIA

T.Y. LIN INTERNATIONAL OR ITS OFFICERS OR AGENTS SHALL NOT BE RESPONSIBLE FOR THE ACCURACY OR COMPLETENESS OF ELECTRONIC COPIES OF THIS PLAN SHEET.

T·Y·LIN INTERNATIONAL
1601 RESPONSE ROAD, SUITE 260
SACRAMENTO, CA 95815

NOTES:

1. SEE SHEET TH-1 FOR NOTES AND LEGEND.

(2)(A) STAGE 2 - PHASE A

A. CONSTRUCT SACRAMENTO RIVER BRIDGE NORTH APPROACH AND BLM ACCESS ROAD.

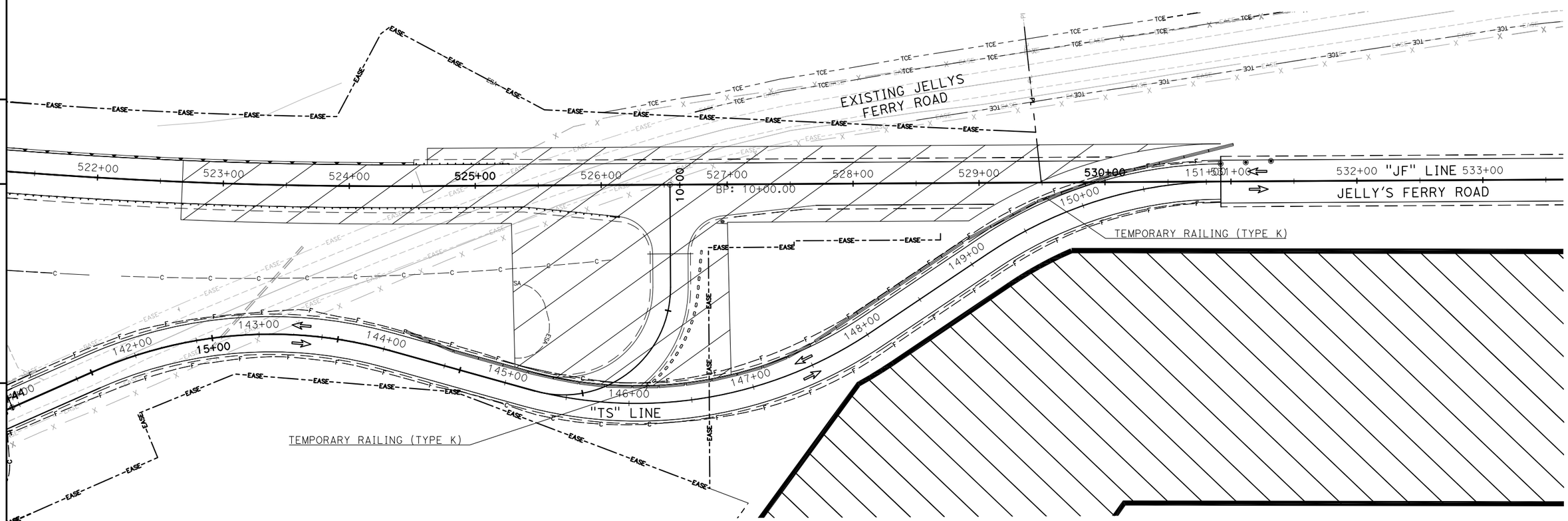

TRAFFIC HANDLING PLAN

SCALE 1"=40'

TH-3

THIS PLAN ACCURATE FOR TRAFFIC HANDLING WORK ONLY

65% SUBMITTAL, NOT FOR CONSTRUCTION

RELATIVE BORDER SCALE IS IN INCHES 0 1 2 3	
REVISED BY	K. BEWSEY/ D. ZURCHER
DATE REVISED	KEITH RHODES
CALCULATED-DESIGNED BY	MICHAEL WOLOHAN
CHECKED BY	
PROJECT ENGINEER	

TEHAMA COUNTY DEPARTMENT OF PUBLIC WORKS

JELLYS FERRY IMPROVEMENT PROJECT

XRef List: | 054-BRDR | 054-C-RD | 054-X-TP | 054-X-LANDNET | 054-Proposed ROW | 054-TEMP Road | 054-Drainage |
Mar. 20, 2015 - 12:59:12 DWG Name: P:\710054 - Jellys Ferry Bridge\500_Engineering\510_Civil\511_CADD\SHEETS\054-TH-3.dwg Updated By: DZurcher

Dist.	COUNTY	ROUTE	POST MILE TOTAL PROJECT	SHEET No.	TOTAL SHEETS
2	TEH	JF		70	138

REGISTERED CIVIL ENGINEER DATE

PLANS APPROVAL DATE

REGISTERED PROFESSIONAL ENGINEER K. BEWSEY No. 71485 Exp. 12/31/15 CIVIL STATE OF CALIFORNIA

T.Y. LIN INTERNATIONAL OR ITS OFFICERS OR AGENTS SHALL NOT BE RESPONSIBLE FOR THE ACCURACY OR COMPLETENESS OF ELECTRONIC COPIES OF THIS PLAN SHEET.

T·Y·LIN INTERNATIONAL
1601 RESPONSE ROAD, SUITE 260
SACRAMENTO, CA 95815

(2)(B) STAGE 2 - PHASE B

A. CONSTRUCT TEMPORARY PAVEMENT SECTION.
B. CONSTRUCT SACRAMENTO RIVER BRIDGE SOUTH PORTION OF ROADWAY CONFORM (1-LANE SIGNAL CONTROL).
C. CONSTRUCT SOUTHBOUND LANE ACROSS THE TEMPORARY ROADWAY (1-LANE STOP CONTROL, SEE SHEET TH-5).

NOTES:

1. SEE SHEET TH-1 FOR NOTES AND LEGEND.

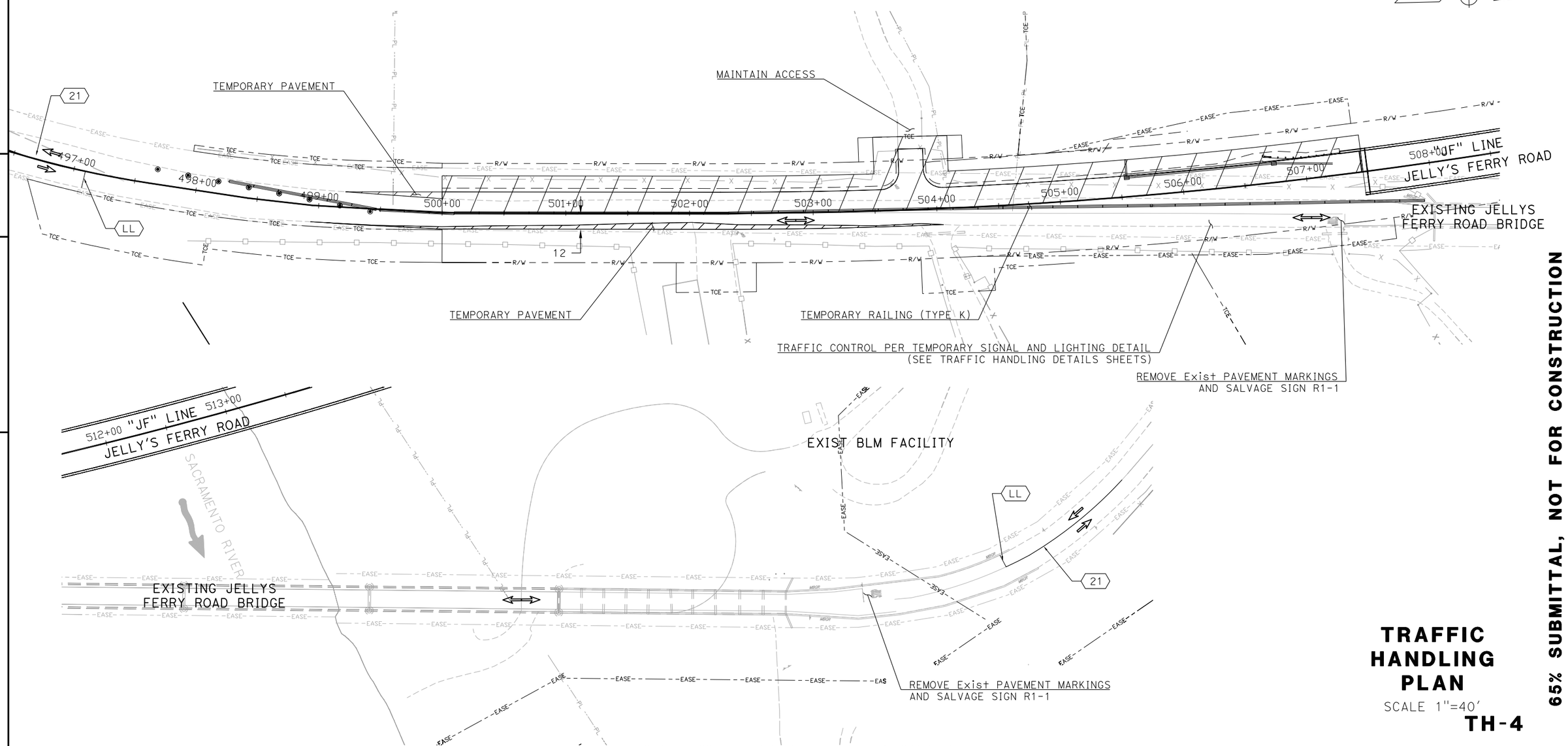

THIS PLAN ACCURATE FOR TRAFFIC HANDLING WORK ONLY

TRAFFIC HANDLING PLAN

SCALE 1"=40'

TH-4

65% SUBMITTAL, NOT FOR CONSTRUCTION

RELATIVE BORDER SCALE IS IN INCHES 0 1 2 3

REVISED BY	DATE REVISED

CALCULATED-DESIGNED BY: K. BEWSEY/ D. ZURCHER
CHECKED BY: KEITH RHODES

PROJECT ENGINEER: MICHAEL WOLOHAN

TEHAMA COUNTY DEPARTMENT OF PUBLIC WORKS
JELLYS FERRY IMPROVEMENT PROJECT

XRef List: | 054-BRDR | 054-C-RD | 054-X-TP | 054-X-LANDNET | 054-Proposed ROW | 054-TEMP Road | 054-Drainage |
Mar. 20, 2015 - 13:01:06 DWG Name: P:\710054 - Jellys Ferry Bridge\500_Engineering\510_Civil\511_CADD\SHEETS\054-TH-4.dwg Updated By: DZurcher

Dist.	COUNTY	ROUTE	POST MILE TOTAL PROJECT	SHEET No.	TOTAL SHEETS
2	TEH	JF		71	138

REGISTERED CIVIL ENGINEER DATE

PLANS APPROVAL DATE

REGISTERED PROFESSIONAL ENGINEER K. BEWSEY No. 71485 Exp. 12/31/15 CIVIL STATE OF CALIFORNIA

T.Y. LIN INTERNATIONAL OR ITS OFFICERS OR AGENTS SHALL NOT BE RESPONSIBLE FOR THE ACCURACY OR COMPLETENESS OF ELECTRONIC COPIES OF THIS PLAN SHEET.

T·Y·LIN INTERNATIONAL
1601 RESPONSE ROAD, SUITE 260
SACRAMENTO, CA 95815

(2)(B) STAGE 2 - PHASE B

A. CONSTRUCT TEMPORARY PAVEMENT SECTION.
B. CONSTRUCT SACRAMENTO RIVER BRIDGE SOUTH PORTION OF ROADWAY CONFORM (1-LANE SIGNAL CONTROL, SEE SHEET TH-4).
C. CONSTRUCT SOUTHBOUND LANE ACROSS THE TEMPORARY ROADWAY (1-LANE STOP CONTROL).

NOTES:

1. SEE SHEET TH-1 FOR NOTES AND LEGEND.

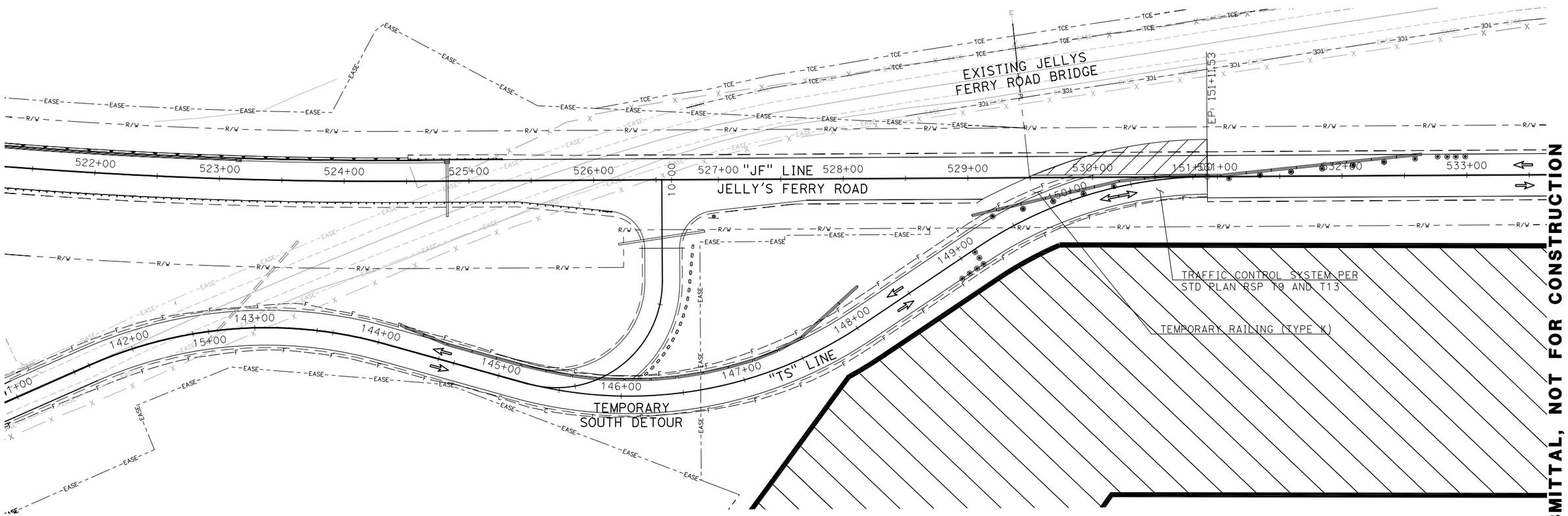

TRAFFIC HANDLING PLAN

SCALE 1"=40'

TH-5

THIS PLAN ACCURATE FOR TRAFFIC HANDLING WORK ONLY

65% SUBMITTAL, NOT FOR CONSTRUCTION

REVISED BY	DATE REVISED
K. BEWSEY/ D. ZURCHER	KEITH RHODES
CALCULATED-DESIGNED BY	CHECKED BY
PROJECT ENGINEER	MICHAEL WOLOHAN

TEHAMA COUNTY DEPARTMENT OF PUBLIC WORKS

JELLYS FERRY IMPROVEMENT PROJECT

RELATIVE BORDER SCALE IS IN INCHES 0 1 2 3

XRef List: | 054-BRDR | 054-C-RD | 054-X-TP | 054-X-LANDNET | 054-Proposed ROW | 054-TEMP Road | 054-Drainage |
Mar. 20, 2015 - 13:03:07 DWG Name: P:\710054 - Jellys Ferry Bridge\500_Engineering\510_Civil\511_CADD\SHEETS\054-TH-5.dwg Updated By: DZurcher

Dist.	COUNTY	ROUTE	POST MILE TOTAL PROJECT	SHEET No.	TOTAL SHEETS
2	TEH	JF		72	138

REGISTERED CIVIL ENGINEER DATE

PLANS APPROVAL DATE

REGISTERED PROFESSIONAL ENGINEER K. BEWSEY No. 71485 Exp. 12/31/15 CIVIL STATE OF CALIFORNIA

T.Y. LIN INTERNATIONAL OR ITS OFFICERS OR AGENTS SHALL NOT BE RESPONSIBLE FOR THE ACCURACY OR COMPLETENESS OF ELECTRONIC COPIES OF THIS PLAN SHEET.

T·Y·LIN INTERNATIONAL
1601 RESPONSE ROAD, SUITE 260
SACRAMENTO, CA 95815

(3)(A) STAGE 3 - PHASE A

A. CONSTRUCT TEMPORARY PAVING.
B. CONSTRUCT NORTHBOUND LANE ACROSS THE TEMPORARY ROADWAY (1-LANE FLAG CONTROL).
C. CONSTRUCT NORTHBOUND LANE SOUTH OF THE SACRAMENTO RIVER BRIDGE (1-LANE SIGNAL CONTROL).

NOTES:

1. SEE SHEET TH-1 FOR NOTES AND LEGEND.

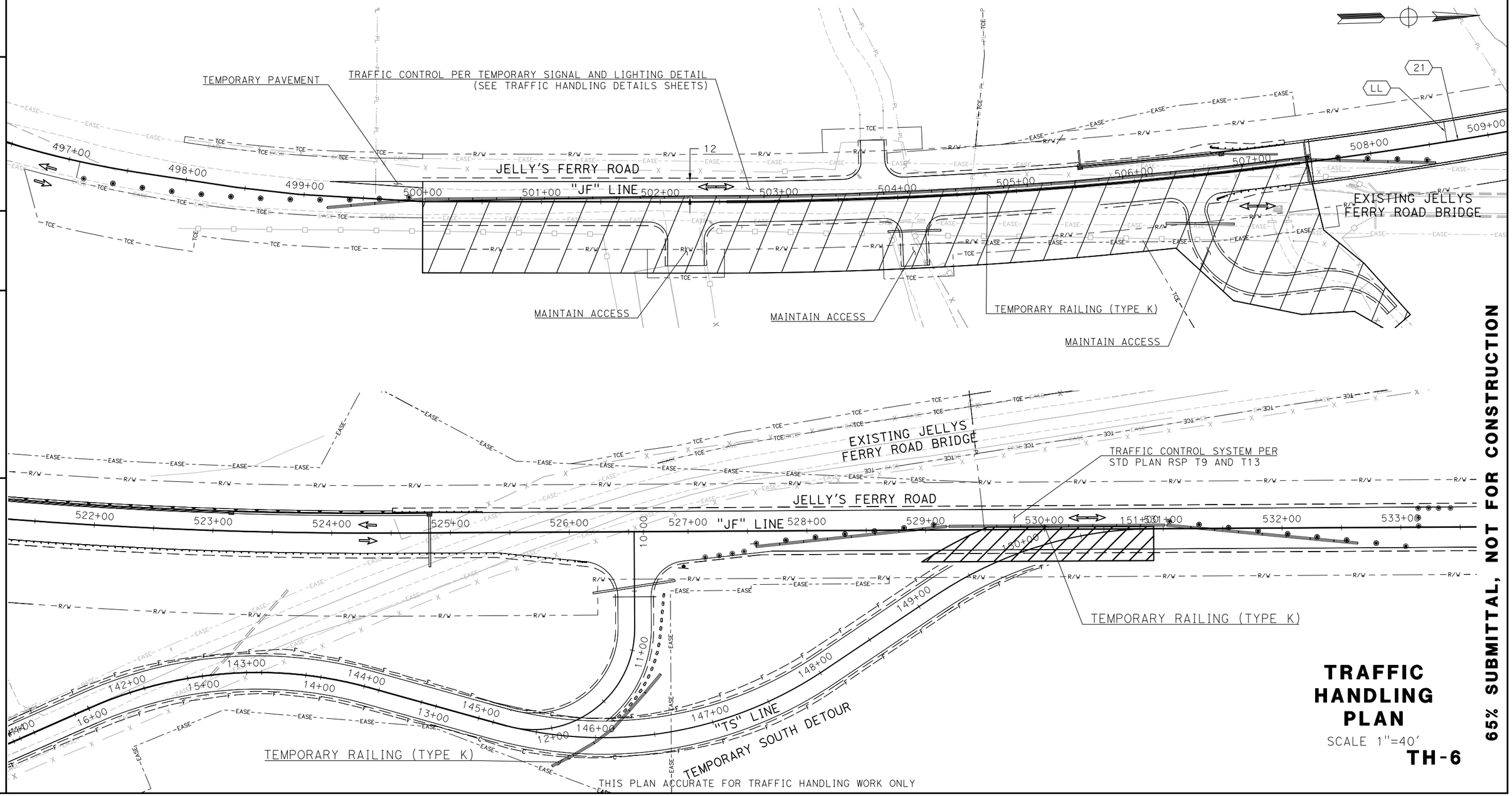

TRAFFIC HANDLING PLAN

SCALE 1"=40'

TH-6

65% SUBMITTAL, NOT FOR CONSTRUCTION

RELATIVE BORDER SCALE IS IN INCHES 0 1 2 3	
REVISED BY	DATE REVISED
CALCULATED-DESIGNED BY K. BEWSEY/ D. ZURCHER	CHECKED BY KEITH RHODES
PROJECT ENGINEER MICHAEL WOLOHAN	
TEHAMA COUNTY DEPARTMENT OF PUBLIC WORKS	
JELLYS FERRY IMPROVEMENT PROJECT	

XRef List: | 054-BRDR | 054-C-RD | 054-X-TP | 054-X-LANDNET | 054-Proposed ROW | 054-TEMP Road | 054-Drainage |
Mar. 20, 2015 - 13:04:37 DWG Name: P:\710054 - Jellys Ferry Bridge\500_Engineering\510_Civil\511_CADD\SHEETS\054-TH-6.dwg Updated By: DZurcher

Dist.	COUNTY	ROUTE	POST MILE TOTAL PROJECT	SHEET No.	TOTAL SHEETS
2	TEH	JF		73	138

REGISTERED CIVIL ENGINEER DATE

PLANS APPROVAL DATE

REGISTERED PROFESSIONAL ENGINEER K. BEWSEY No. 71485 Exp. 12/31/15 CIVIL STATE OF CALIFORNIA

T.Y. LIN INTERNATIONAL OR ITS OFFICERS OR AGENTS SHALL NOT BE RESPONSIBLE FOR THE ACCURACY OR COMPLETENESS OF ELECTRONIC COPIES OF THIS PLAN SHEET.

T·Y·LIN INTERNATIONAL
1601 RESPONSE ROAD, SUITE 260
SACRAMENTO, CA 95815

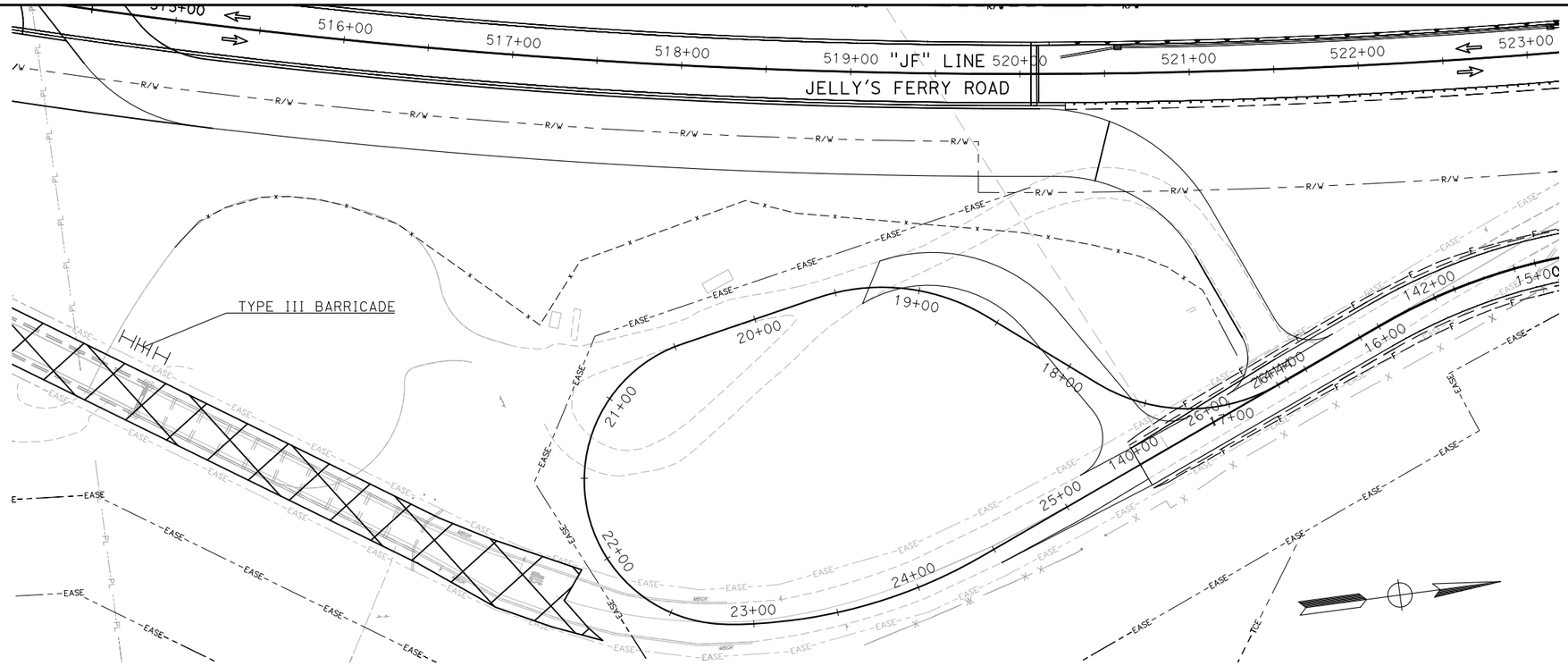

③ Ⓑ STAGE 3 - PHASE B

A. REMOVE EXISTING BRIDGE AND MARINE ACCESS (PROHIBIT ACCESS TO BOAT LAUNCH).

NOTES:

1. SEE SHEET TH-1 FOR NOTES AND LEGEND.

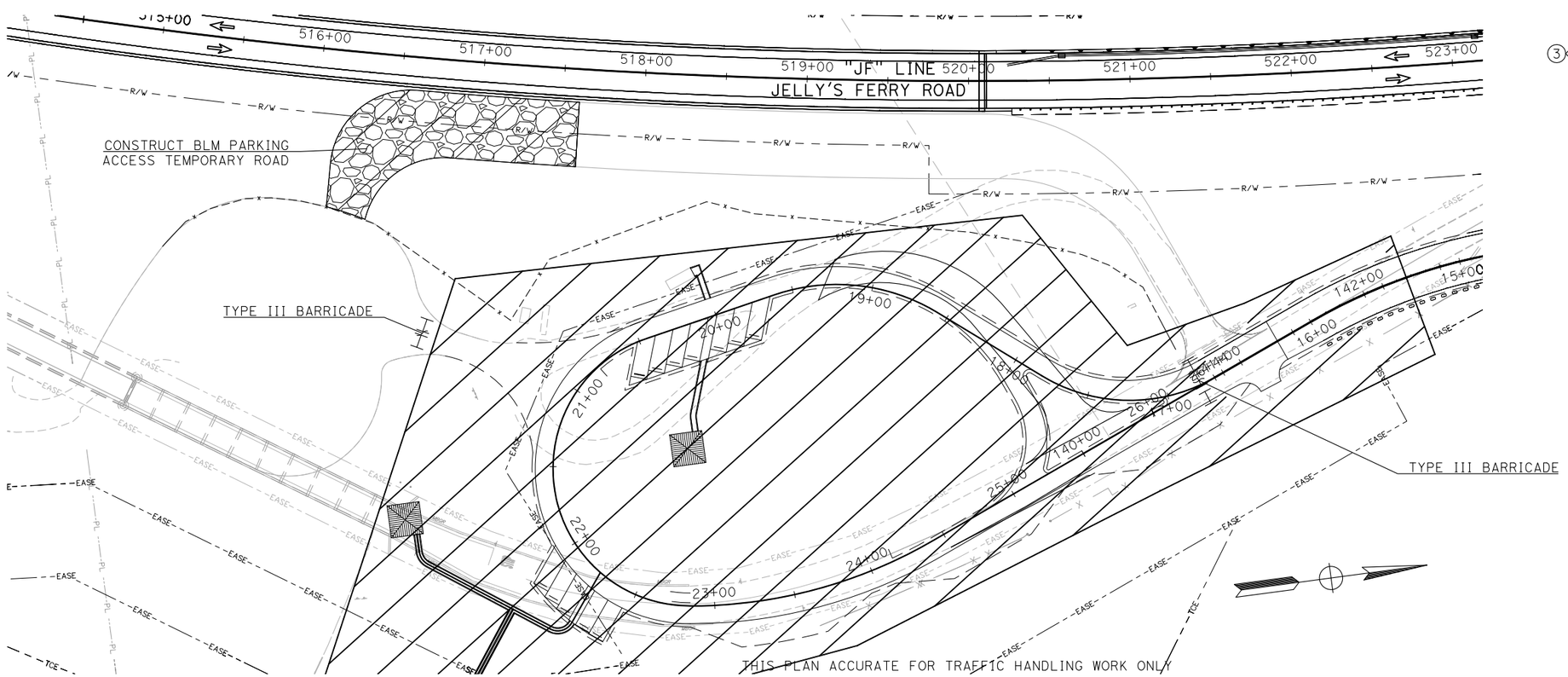

③ Ⓒ STAGE 3 - PHASE C

A. CONSTRUCT BLM PARKING ACCESS TEMPORARY ROAD.
B. CONSTRUCT BLM CIRCULATION ROAD AND BLM IMPROVEMENTS.
C. REMOVE TEMPORARY CONSTRUCTION ROADWAY, TEMPORARY ACCESS ROAD, REMAINING OLD JELLYS FERRY ROAD, CONSTRUCT ALL REMAINING DRAINAGE AND RESTORE SITES.

THIS PLAN ACCURATE FOR TRAFFIC HANDLING WORK ONLY

TRAFFIC HANDLING PLAN

SCALE 1"=40'

TH-7

65% SUBMITTAL, NOT FOR CONSTRUCTION

REVISED BY	K. BEWSEY/ D. ZURCHER
DATE REVISED	KEITH RHODES
CALCULATED-DESIGNED BY	MICHAEL WOLOHAN
CHECKED BY	
PROJECT ENGINEER	

RELATIVE BORDER SCALE IS IN INCHES 0 1 2 3

TEHAMA COUNTY DEPARTMENT OF PUBLIC WORKS

JELLYS FERRY IMPROVEMENT PROJECT

XRef List: | 054-BRDR | 054-C-RD | 054-X-TP | 054-X-LANDNET | 054-Proposed ROW | 054-TEMP Road | 054-Drainage | 054-CONSTRUCTION ACCESS |
Mar. 20, 2015 - 13:06:47 DWG Name: P:\710054 - Jellys Ferry Bridge\500_Engineering\510_Civil\511_CADD\SHEETS\054-TH-7.dwg Updated By: DZurcher

Dist.	COUNTY	ROUTE	POST MILE TOTAL PROJECT	SHEET No.	TOTAL SHEETS
2	TEH	JF		74	138

REGISTERED CIVIL ENGINEER DATE

PLANS APPROVAL DATE

REGISTERED PROFESSIONAL ENGINEER K. BEWSEY No. 71485 Exp. 12/31/15 CIVIL STATE OF CALIFORNIA

T.Y. LIN INTERNATIONAL OR ITS OFFICERS OR AGENTS SHALL NOT BE RESPONSIBLE FOR THE ACCURACY OR COMPLETENESS OF ELECTRONIC COPIES OF THIS PLAN SHEET.

T·Y·LIN INTERNATIONAL
1601 RESPONSE ROAD, SUITE 260
SACRAMENTO, CA 95815

TRAFFIC CONTROL QUANTITIES

SHEET	TEMPORARY RAILING (TYPE K)	CHANNELIZERS (SURFACE MOUNTED)	TEMPORARY CRASH CUSHION (ARRAY)	TEMPORARY CRASH CUSHION (NARROW)	BARRICADE (TYPE III)	TEMPORARY PAVEMENT MARKING AND TEMPORARY TRAFFIC STRIPE (PAINT) (SF)		SIGNS							
								FLAG CONTROL				STOP CONTROL			
						21	LL	W20-1	W20-4	C9a (CA)	W3-4	W20-4	W3-3	R10-6	W1-4
	LF	EA	EA	EA	EA	LF	SF	EA	EA	EA	EA	EA	EA	EA	EA
TH-1	1780	32				1000	23	2	2	2	2	2	2	2	2
TH-2	1340	43		1		500	17	2	2	2	2	2	2	2	2
TH-3	700	3													
TH-4	960	8				1000	25					2	2	2	2
TH-5	760	22						2	2	2	2				
TH-6	1560	43				500	17	2	2	2	2	2	2	2	2
TH-7					6										
TOTAL	7100	151	0	1	6	3000	82	8	8	8	8	8	8	8	8

SIGNS
NO SCALE

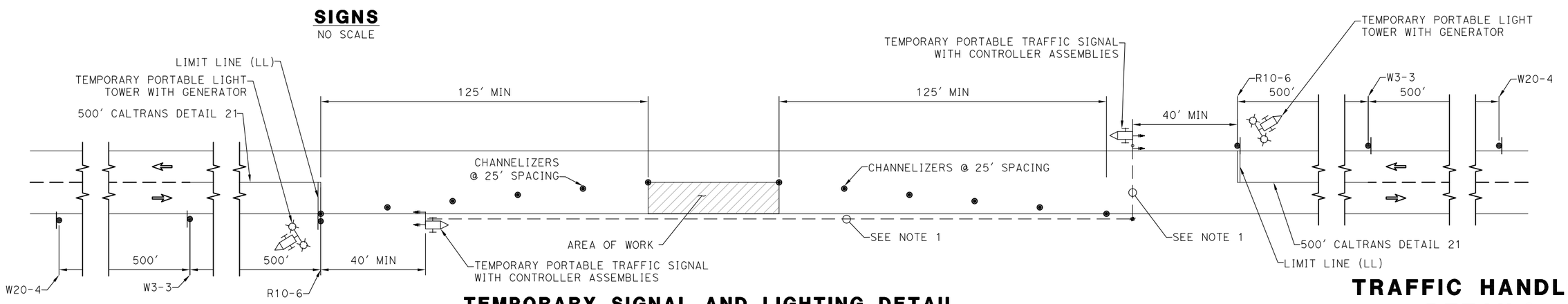

TEMPORARY SIGNAL AND LIGHTING DETAIL
NO SCALE

NOTES:

1. SIGNAL INTERCONNECT AS PER MANUFACTURER SPECIFICATIONS.
2. TEMPORARY SIGNS TO MOUNTED ON WOOD POLES WITH FLASHING BEACON AND PHOTOVOLTIAC PANELS.

THIS PLAN ACCURATE FOR TRAFFIC HANDLING WORK ONLY

TRAFFIC HANDLING DETAILS
NO SCALE

THD-1

65% SUBMITTAL, NOT FOR CONSTRUCTION

RELATIVE BORDER SCALE IS IN INCHES 0 1 2 3

REVISED BY	DATE REVISED

CALCULATED-DESIGNED BY	CHECKED BY
K. BEWSEY/ D. ZURCHER	KEITH RHODES

PROJECT ENGINEER: MICHAEL WOLOHAN

TEHAMA COUNTY DEPARTMENT OF PUBLIC WORKS

JELLYS FERRY IMPROVEMENT PROJECT

XRef list: | 054-BRIDR |
Mar. 20, 2015 - 13:10:56 DWG Name: P:\710054 - Jellys Ferry Bridge\500_Engineering\510_Civil\511_CADD\SHEETS\054-THD-1.dwg Updated By: DZurcher

Dist.	COUNTY	ROUTE	POST MILE TOTAL PROJECT	SHEET No.	TOTAL SHEETS
2	TEH	JF		75	138

REGISTERED CIVIL ENGINEER DATE

PLANS APPROVAL DATE

REGISTERED PROFESSIONAL ENGINEER K. BEWSEY No. 71485 Exp. 12/31/15 CIVIL STATE OF CALIFORNIA

T.Y. LIN INTERNATIONAL OR ITS OFFICERS OR AGENTS SHALL NOT BE RESPONSIBLE FOR THE ACCURACY OR COMPLETENESS OF ELECTRONIC COPIES OF THIS PLAN SHEET.

T·Y·LIN INTERNATIONAL
1601 RESPONSE ROAD, SUITE 260
SACRAMENTO, CA 95815

PLACE HMA DIKE & HMA (Misc AREAS)

SHEET No.	STATION	LOCATION	HMA DIKE TYPE C	HMA DIKE TYPE E	HMA DIKE TYPE F	HMA* (TYPE A)	HMA* OVERSIDE DRAIN (Misc AREA)
			LF	LF	LF	TON	SY
L-1/2	"JF" 505+53.03 TO "JF" 506+67.01	L+		114.0		7.6	3.4
L-2	"JF" 506+67.01 TO "JF" 507+03.94	L+	36.9			1.0	
L-2	"JF" 507+03.94 TO "JF" 507+29.17	L+			25.2	0.8	
L-3	"JF" 524+51.30 TO "JF" 525+26.32	L+			75.0	2.5	8.9
L-4	"JF" 535+50.00 TO "JF" 536+13.19	R+		63.2		4.2	7.6
L-4	"JF" 536+48.53 TO "JF" 536+88.76	L+	40.2			1.1	3.7
L-4	"JF" 536+88.76 TO "JF" 537+11.15	L+			22.4	0.7	
L-5	"JF" 544+35.15 TO "JF" 544+68.88	L+			33.7	1.1	
L-5	"JF" 544+68.88 TO "JF" 544+96.72	L+	27.8			0.8	8.6
	TOTAL		104.9	177.2	156.3	19.9	32.2

*QUANTITY INCLUDED IN PAVEMENT STRUCTURE QUANTITIES SUMMARY.

PAVEMENT STRUCTURE QUANTITIES

LOCATION	HMA (TYPE A)	AB (CLASS 2)	COLD PLANE AC
	TON	CY	SY
"JF" 500+00.00 TO 556+40.00	3,253	3,901	55
"D" 40+00.00 TO 42+41.67	61	66	
"R" 10+00.00 TO 12+38.30	143	155	
"R" 12+38.30 TO 16+68.78	296	292	
"R" 16+68.78 TO 26+43.91	54	865	
"MS" 20+00.00 TO 26+43.91	14	360	
"MN" 30+00.00 TO 38+74.73		612	
HMA DIKE	20		
HMA (Misc AREAS)	-		
RECREATIONAL PATH		85	
TOTAL	3,841	6,336	55

EARTHWORK QUANTITIES

LOCATION	ROADWAY EXCAVATION	CHANNEL EXCAVATION	DITCH EXCAVATION	EMBANKMENT (N)	IMPORT BORROW
	CY	CY	CY	CY	CY
"JF" 500+00.00 TO 507+46.00	851			2,616	-1,765
"JF" 520+10.00 TO 537+16.50	1,566			20,128	-18,562
"JF" 543+99.00 TO 556+40.00	1,456			4,637	-3,181
"R" 10+00.00 TO 26+43.91	5,346			571	4,775
"MS" 20+00.00 TO 24+55.51	387			292	95
"MN" 30+00.00 TO 30+74.73	1,025			4	1,021
INDEPENDENT VEGETATIVE SWALES			2,417	27	2,390
LOCAL BORROW BASIN		13,187		1,045	12,142
TOTAL	10,631	13,187	2,417	29,320	-3,085

(N) - NOT A SEPARATE PAY ITEM, FOR INFORMATION ONLY

RAILING QUANTITIES

SHEET No.	STATION	LOCATION	MGS	ALTERNATIVE IN-LINE TERMINAL SYSTEM	TRANSITION RAILING (TYPE WB-31)	ALTERNATIVE FLARED TERMINAL SYSTEM	WEED CONTROL MAT (FIBER)
			LF	EA	EA	EA	SF
L-2	"JF" 506+67.01 TO 507+29.17	L+ & R+			2	2	66.7
L-3	"JF" 520+26.67 TO 526+13.66	R+	515	1	1	-	99.8
L-X	"JF" 524+51.30 TO 525+26.32	L+		1	1	-	33.3
L-4	"JF" 536+28.47 TO 536+89.76	R+			1	1	33.3
L-X	"JF" 536+48.53 TO 537+11.15	L+			1	1	33.3
L-5	"JF" 544+04.30 TO 544+66.65	R+			1	1	33.3
L-X	"JF" 544+35.15 TO 544+96.72	L+			1	1	33.3
	TOTAL		515	2	8	6	495.6

PAVEMENT DELINEATION QUANTITIES

SHEET No.	STATIONING	LOCATION	DETAIL	THERMOPLASTIC TRAFFIC STRIPE 4" SOLID WHITE	THERMOPLASTIC TRAFFIC STRIPE 4" SOLID (YELLOW)	THERMOPLASTIC TRAFFIC STRIPE 4" BROKEN (12'-3')	THERMOPLASTIC PAVEMENT MARKING	PAVEMENT MARKER (TYPE D)	CULVERT MARKER	OBJECT MARKER (TYPE P)	DESCRIPTION/COMMENTS
				LF	LF	LF	SQFT	EA	EA	EA	
L-1/2/3/4/5/6	"JF" 500+00 TO 556+40	L+	27B	5,633				-		4	
L-1/2/3	"JF" 500+00 TO 526+14	Ctr	22		4,842			97			
L-1/2/3	"JF" 500+00 TO 524+14	R+	27B	2,421				-			
L-3	"JF" 524+14 TO 526+14	R+	27C			200	35	-	1	2	
L-3/4/5/6	"JF" 526+95 TO 556+40	Ctr	22		5,890			118			
L-3/4/5/6	"JF" 526+95 TO 556+40	R+	27B	2,945							
	RECREATION QUANTITIES			304				-		2	
			TOTAL	11,303	10,732	200	35	215	1	8	

NOTES:

1. ALL DIMENSIONS ARE IN FEET UNLESS OTHERWISE SHOWN.

SUMMARY OF QUANTITIES

NO SCALE

Q-1

65% SUBMITTAL, NOT FOR CONSTRUCTION

RELATIVE BORDER SCALE IS IN INCHES 0 1 2 3

REVISED BY	DATE REVISED

CALCULATED-DESIGNED BY: K. BEWSEY/ D. ZURCHER
CHECKED BY: KEITH RHODES
PROJECT ENGINEER: MICHAEL WOLOHAN

TEHAMA COUNTY DEPARTMENT OF PUBLIC WORKS
JELLYS FERRY IMPROVEMENT PROJECT

XRef List: | 054-BRDR |
Mar. 20, 2015 - 13:37:39 DWG Name: P:\710054 - Jellys Ferry Bridge\500_Engineering\510_Civil\511_CADD\SHEETS\054-Q.dwg Updated By: DZurcher

Dist.	COUNTY	ROUTE	POST MILE TOTAL PROJECT	SHEET No.	TOTAL SHEETS
2	TEH	JF		76	138

REGISTERED CIVIL ENGINEER DATE

PLANS APPROVAL DATE

REGISTERED PROFESSIONAL ENGINEER K. BEWSEY No. 71485 Exp. 12/31/15 CIVIL STATE OF CALIFORNIA

T.Y. LIN INTERNATIONAL OR ITS OFFICERS OR AGENTS SHALL NOT BE RESPONSIBLE FOR THE ACCURACY OR COMPLETENESS OF ELECTRONIC COPIES OF THIS PLAN SHEET.

T·Y·LIN INTERNATIONAL
1601 RESPONSE ROAD, SUITE 260
SACRAMENTO, CA 95815

ROADSIDE SIGN QUANTITIES

SHEET No.	SIGN CODE	PANEL SIZE (IN X IN)	ROADSIDE SIGN ONE POST	REMOVE/ SALVAGE ROADSIDE SIGN	RELOCATE ROADSIDE SIGN	REMARKS
			EA	EA	EA	
L-1	W1-2(L+)(35)	30 X 30	1			
	W1-2(R+)(35)	30 X 30	1			
	W1-2a(L+)(35)	36 X 36	1			
	W1-2a(R+)(35)	36 X 36	1			
	W13-1P	18 X 18	2			
	W1-8	18 X 24	6			
	M4-6	24 X 12	1			
	M4-14	24 X 12	1			
	D11-1	24 X 18	2			
				1		"ONE LANE BRIDGE"
L-2	D11-1	24 X 18	2			
	R1-1	30 X 30	1			
				1		"STOP"
				1		"WEIGHT LIMIT..."
				1		"BRIDGE SPEED LIMIT 15 MPH"
L-3				1		"STOP"
				1		"WEIGHT LIMIT..."
L-6	W1-2(L+)(35)	30 X 30	1	1		"BRIDGE SPEED LIMIT 15 MPH"
	W1-2(R+)(35)	30 X 30	1			
	W1-2a(L+)(35)	36 X 36	1			
	W1-2a(R+)(35)	36 X 36	1			
	W13-1P	18 X 18	2			
	W1-8	18 X 24	4			
	M4-6	24 X 12	1			
	M4-14	24 X 12	1			
	D11-1	24 X 18	2			
					1	ADVISORY SYMBOL "T-INTERSECTION"
	TOTAL	135.6 SF	33	7	1	

NOTES:

1. ALL DIMENSIONS ARE IN FEET UNLESS OTHERWISE SHOWN.

RECREATION QUANTITIES

SHEET No.	STATION	LOCATION	4" THERMOPLASTIC TRAFFIC STRIPE (WHITE)*	PARKING STOP (N)	OUTDOOR RECREATIONAL ACCESS ROUTE (N)	MINOR CONCRETE (PARKING STOP)	STABILIZED DECOMPOSED GRANITE	AB (CLASS 2)*	MINOR CONCRETE (CURB)	SHADE STRUCTURE (20 SF)	PICNIC TABLE UNIT (ACCESSIBLE)	GRILL UNIT (ACCESSIBLE)	ROCK BARRIER	WOOD GUARD POSTS (TYPE 2)	STEEL PIPE GATE**	STEEL PIPE GATE LOCKBOX AND LOCKING PINS
			LF	EA	LF	CY	CY	CY	CY	EA	EA	EA	LF	LF	LF	LF
C-3	"JF" 515+91.69 TO "JF" 516+57.18	L+												68		
	"R" 10+54.83	L+ & R+													2	1
	"R" 10+53.66 TO "R" 16+00.00	R+											546			
	"R" 20+43.14	L+								1	1	1				
	"R" 21+66.34	R+								1	1	1				
C-5	"R" 19+64.46 TO "R" 20+71.64	L+	318	6		2.1										
	"R" 21+95.22 TO "R" 22+46.06	R+	238	5		1.8										
C-6	"P1" 50+00.00 TO "P1" 50+21.29	L+ & R+			21.3		1.2	5.9	0.7							
	"P1" 50+60.01 TO "P1" 51+05.03	L+ & R+			45.0		2.5	12.5	1.5							
	"P2" 60+35.48 TO "P2" 61+57.47	L+ & R+			122.0		6.8	33.9	4.0							
	"P3" 70+01.50 TO "P3" 71+17.58	L+ & R+			116.1		6.4	32.3	3.8							
	TOTAL		556	11	304.4	3.9	16.9	84.6	10.0	2	2	2	546	68	2	1

(N) - NOT A SEPARATE PAY ITEM, FOR INFORMATION ONLY
*QUANTITY INCLUDED IN PAVEMENT STRUCTURE QUANTITIES SUMMARY.
**QUANTITY INCLUDED IN FENCE & GATE QUANTITIES SUMMARY.

SUMMARY OF QUANTITIES

NO SCALE

Q-2

65% SUBMITTAL, NOT FOR CONSTRUCTION

RELATIVE BORDER SCALE IS IN INCHES 0 1 2 3

REVISED BY	DATE REVISED
K. BEWSEY/ D. ZURCHER	KEITH RHODES
CALCULATED-DESIGNED BY	CHECKED BY

PROJECT ENGINEER: MICHAEL WOLOHAN

TEHAMA COUNTY DEPARTMENT OF PUBLIC WORKS

JELLYS FERRY IMPROVEMENT PROJECT

XRef List: | 054-BRGR |
Mar. 20, 2015 - 13:37:39 DWG Name: P:\710054 - Jellys Ferry Bridge\500_Engineering\510_Civil\511_CADD\SHEETS\054-Q.dwg Updated By: DZurcher

Dist.	COUNTY	ROUTE	POST MILE TOTAL PROJECT	SHEET No.	TOTAL SHEETS
2	TEH	JF		77	138

REGISTERED CIVIL ENGINEER DATE

PLANS APPROVAL DATE

REGISTERED PROFESSIONAL ENGINEER K. BEWSEY No. 71485 Exp. 12/31/15 CIVIL STATE OF CALIFORNIA

T.Y. LIN INTERNATIONAL OR ITS OFFICERS OR AGENTS SHALL NOT BE RESPONSIBLE FOR THE ACCURACY OR COMPLETENESS OF ELECTRONIC COPIES OF THIS PLAN SHEET.

T·Y·LIN INTERNATIONAL
1601 RESPONSE ROAD, SUITE 260
SACRAMENTO, CA 95815

FENCE & GATE QUANTITIES

SHEET No.	STATION	LOCATION	REMOVE FENCE (TYPE BW, 3-4 WIRE)	REMOVE FENCE (TYPE BW, 5-7 WIRE)	REMOVE WOOD FENCE	FENCE (TYPE BW, 3-STRAND, METAL POST)	FENCE (TYPE BW, 4-STRAND, METAL POST)	FENCE (TYPE BW, 5-STRAND, METAL POST)	FENCE (TYPE BW, 7-STRAND, METAL POST)	FENCE (TYPE BW, 5-STRAND, WOOD POST)	FENCE (TYPE WOOD, 3-RAIL, WOOD POST)	FENCE (TYPE WOOD, 4-RAIL, WOOD POST)	RESET GATE	REMOVE GATE	14' GATE	16' GATE	STEEL PIPE GATE	TEMPORARY FENCE (TYPE CL-6)
			LF	LF	LF	LF		LF	LF	LF	LF	LF	EA	EA	EA	EA	EA	LF
L-1	"JF" 497+96.91 TO 502+14.86	L+		339					339									339
	"JF" 497+98.79 TO 501+53.95	R+			371							371						371
	"JF" 502+40.87 TO 503+96.75	R+			218							218						218
	"JF" 502+14.86 TO 503+70.77	L+			101						101							101
	"JF" 503+90.95 TO 504+25.41	L+			66						66							66
L-1/2	"JF" 504+25.06 TO 507+13.27	R+			332							332						332
	"JF" 504+25.41 TO 507+81.04	L+		358					358									358
L-2	"JF" 506+50.67 TO 507+80.24	R+												2	1	1		
	"JF" 507+32.99 TO 507+81.04	L+			65													65
	"JF" 507+75.31 TO 507+86.10	R+			32							32						32
L-3	"R" 23+60.46 TO 24+95.02	R+		141				141										141
	"R" 25+03.20 TO 16+45.46	R+												1			1	
	"R" 25+11.39 TO 15+10.09	R+		291				291										291
L-3/4	"R" 15+10.09 TO "JF" 538+73.85	R+		1624				1624										1624
L-3/4	"JF" 524+52.76 TO 539+57.85	L+		1713				1713										1713
L-4	"JF" 535+37.05	L+													1			
	"JF" 539+64.16	L+											1					
L-4/5	"JF" 538+73.85 TO 545+92.77	L+	156			156												156
	"JF" 539+68.89 TO 546+16.53	L+	725				725											725
L-5	"JF" 542+55.77 TO 543+33.87	L+ & R+	289				289											289
L-5/6	"JF" 545+92.77 TO 553+10.47	L+ & R+		742				742										742
	"JF" 546+16.53 TO 546+40.00	L+		1030						1030								1030
L-6	"JF" 553+27.00 TO 546+40.00	R+		348				348										348
	RECREATION QUANTITIES																2	
	TOTAL		1170	6586	1185	156	1014	4859	697	1030	162	953	1	3	2	1	3	8941

NOTES:

1. TEMPORARY FENCE (TYPE CL-6) TO BE PLACED IN ALL FENCE REMOVAL LOCATIONS.

SUMMARY OF QUANTITIES

NO SCALE

Q-3

65% SUBMITTAL, NOT FOR CONSTRUCTION

RELATIVE BORDER SCALE IS IN INCHES 0 1 2 3

REVISED BY	DATE REVISED

K. BEWSEY/ D. ZURCHER	KEITH RHODES
CALCULATED-DESIGNED BY	CHECKED BY

PROJECT ENGINEER MICHAEL WOLOHAN

TEHAMA COUNTY DEPARTMENT OF PUBLIC WORKS

JELLYS FERRY IMPROVEMENT PROJECT

XRef List: | 054-BRDR |
Mar. 20, 2015 - 13:37:39 DWG Name: P:\710054 - Jellys Ferry Bridge\500_Engineering\510_Civil\511_CADD\SHEETS\054-Q.dwg Updated By: DZurcher

DIST	COUNTY	ROUTE	POST MILES TOTAL PROJECT	SHEET No	TOTAL SHEETS
02	TEH	CR		78	138

REGISTERED CIVIL ENGINEER DATE

PLANS APPROVAL DATE

REGISTERED PROFESSIONAL ENGINEER Michael Wolohan No. 67743 Exp. 6/30/15 CIVIL STATE OF CALIFORNIA

T. Y. Lin International or its officers or agents shall not be responsible for the accuracy or completeness of scanned copies of this plan sheet.

T·Y·LIN INTERNATIONAL
1601 Response Road, Suite 260
SACRAMENTO, CA 95815

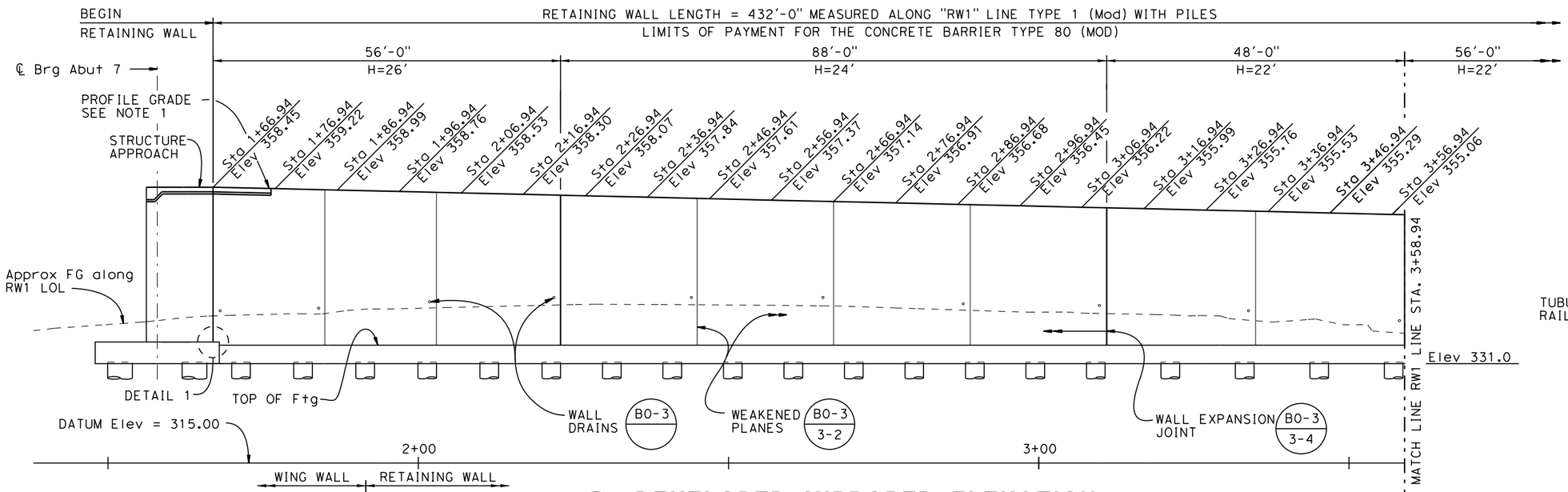

DEVELOPED MIRRORED ELEVATION
1"=10'

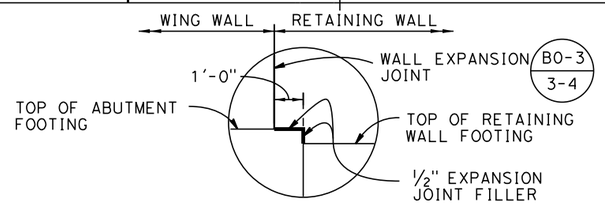

DETAIL 1
⅜"=1'-0"

CURVE A DATA:
R= 3951.25'
Δ= 07°18'40"
T= 252.43'
L= 504.19'

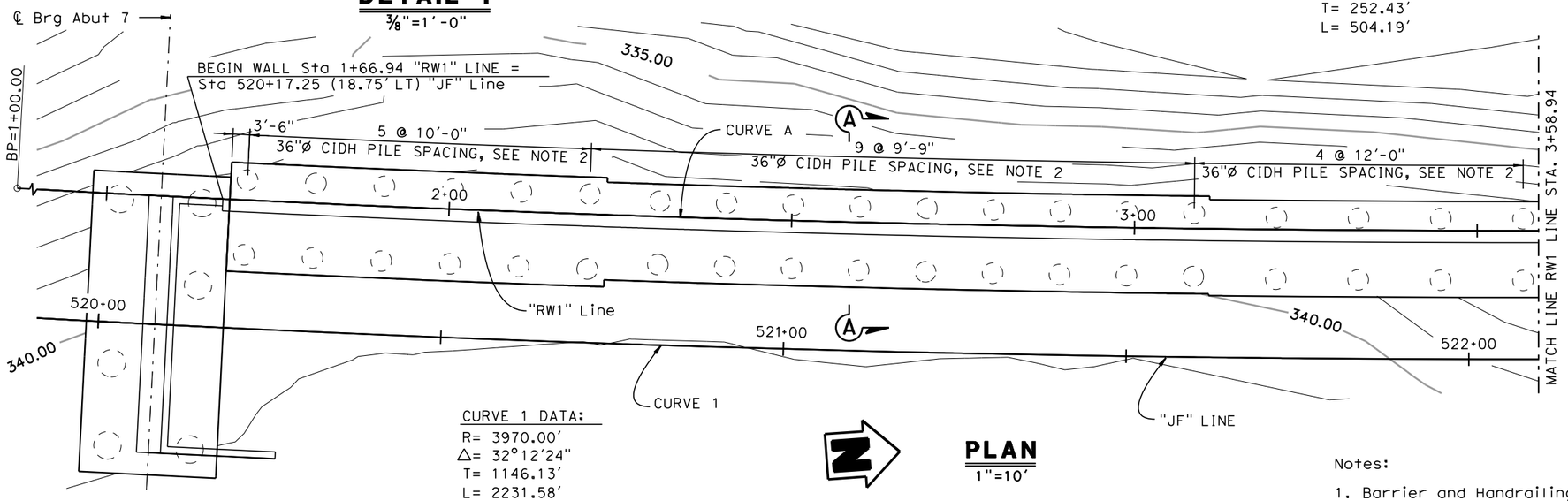

CURVE 1 DATA:
R= 3970.00'
Δ= 32°12'24"
T= 1146.13'
L= 2231.58'

PLAN
1"=10'

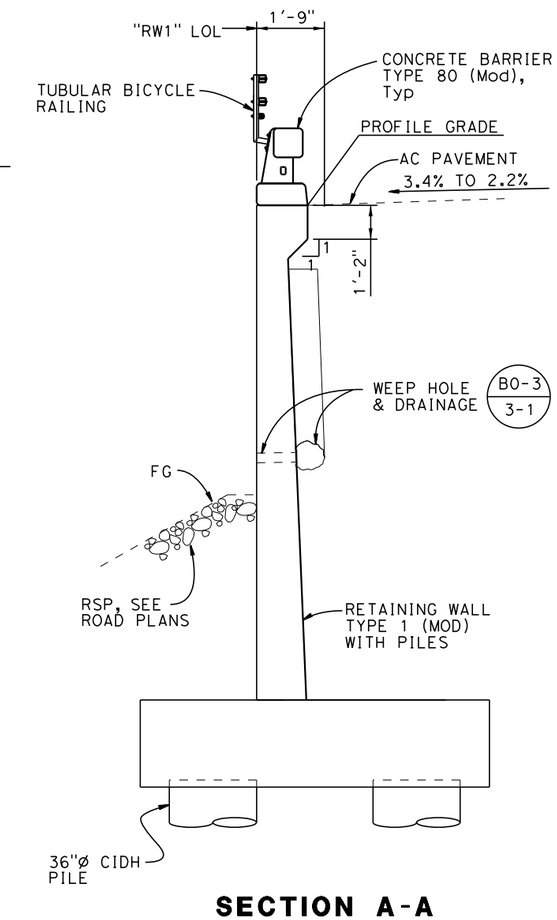

SECTION A-A
⅜"=1'-0"

Notes:

1. Barrier and Handrailing not shown.
2. Pile spacing is measured along "RW1" Line.

R-1

65% SUBMITTAL, NOT FOR CONSTRUCTION

X DESIGN OVERSIGHT	DESIGN	BY M. Philipps	CHECKED
X SIGN OFF DATE	DETAILS	BY H. Hidalgo	CHECKED
	QUANTITIES	BY M. Philipps	CHECKED

PREPARED FOR **TEHAMA COUNTY PUBLIC WORKS DEPARTMENT**

Michael Wolohan
PROJECT ENGINEER

BRIDGE NO. 08C-0374
POST MILES X

SACRAMENTO RIVER BRIDGE AT JELLYS FERRY ROAD
RETAINING WALL LAYOUT NO. 1

DESIGN DETAIL SHEET (ENGLISH) (REV. 03/14/12)

ORIGINAL SCALE IN INCHES FOR REDUCED PLANS 0 1 2 3

UNIT: X
PROJECT NUMBER & PHASE: X
CONTRACT NO.: X

DISREGARD PRINTS BEARING EARLIER REVISION DATES

REVISION DATES X

SHEET 78 OF 81

DIST	COUNTY	ROUTE	POST MILES TOTAL PROJECT	SHEET No	TOTAL SHEETS
02	TEH	CR		79	138

REGISTERED CIVIL ENGINEER DATE

PLANS APPROVAL DATE

REGISTERED PROFESSIONAL ENGINEER Michael Wolohan No. 67743 Exp. 6/30/15 CIVIL STATE OF CALIFORNIA

T. Y. Lin International or its officers or agents shall not be responsible for the accuracy or completeness of scanned copies of this plan sheet.

T·Y·LIN INTERNATIONAL
1601 Response Road, Suite 260
SACRAMENTO, CA 95815

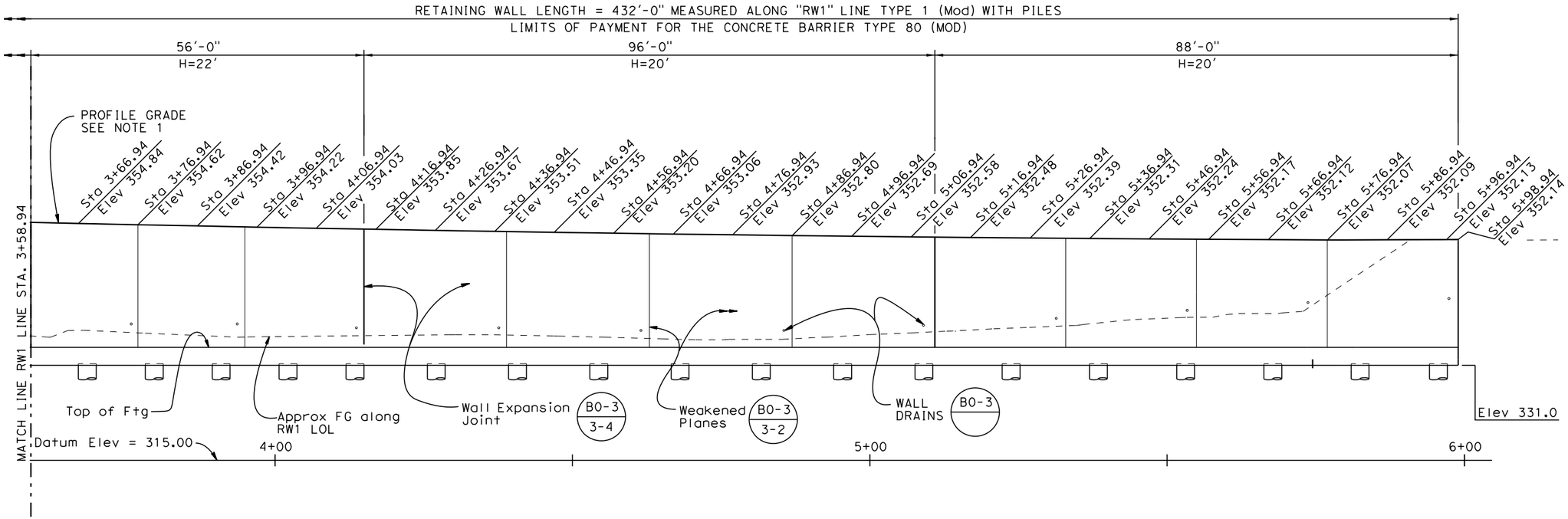

DEVELOPED MIRRORED ELEVATION

1"=10'

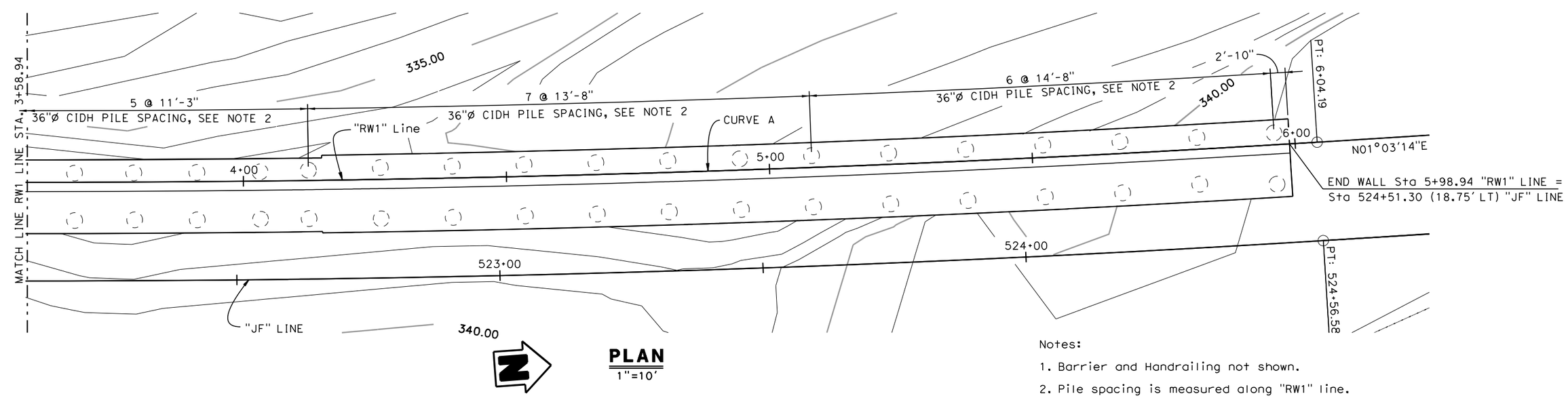

PLAN

1"=10'

Notes:

1. Barrier and Handrailing not shown.
2. Pile spacing is measured along "RW1" line.

R-2

65% SUBMITTAL, NOT FOR CONSTRUCTION

X DESIGN OVERSIGHT	DESIGN	BY M. Philipps	CHECKED
X SIGN OFF DATE	DETAILS	BY H. Hidalgo	CHECKED
	QUANTITIES	BY M. Philipps	CHECKED

PREPARED FOR TEHAMA COUNTY PUBLIC WORKS DEPARTMENT

Michael Wolohan PROJECT ENGINEER

BRIDGE NO. 08C-0374 POST MILES X

SACRAMENTO RIVER BRIDGE AT JELLYS FERRY ROAD

RETAINING WALL LAYOUT NO. 2

DESIGN DETAIL SHEET (ENGLISH) (REV. 03/14/12)

ORIGINAL SCALE IN INCHES FOR REDUCED PLANS 0 1 2 3

UNIT: X PROJECT NUMBER & PHASE: X CONTRACT NO.: X

DISREGARD PRINTS BEARING EARLIER REVISION DATES

REVISION DATES X

SHEET 79 OF 81

FILE => t:\sacramento\legacy\pri_file\710054 - jellys ferry bridge\500_engineering\520_structures\521_cadd\054JF_dgn\054JF-a-gg-rw_lo02.dgn

USERNAME => hhidalgo DATE PLOTTED => 3/20/2015 TIME PLOTTED => 1:49:45 PM

DIST	COUNTY	ROUTE	POST MILES TOTAL PROJECT	SHEET No	TOTAL SHEETS
02	TEH	CR		80	138

REGISTERED CIVIL ENGINEER DATE

PLANS APPROVAL DATE

REGISTERED PROFESSIONAL ENGINEER Michael Wolohan No. 67743 Exp. 6/30/15 CIVIL STATE OF CALIFORNIA

T. Y. Lin International or its officers or agents shall not be responsible for the accuracy or completeness of scanned copies of this plan sheet.

T·Y·LIN INTERNATIONAL
1601 Response Road, Suite 260
SACRAMENTO, CA 95815

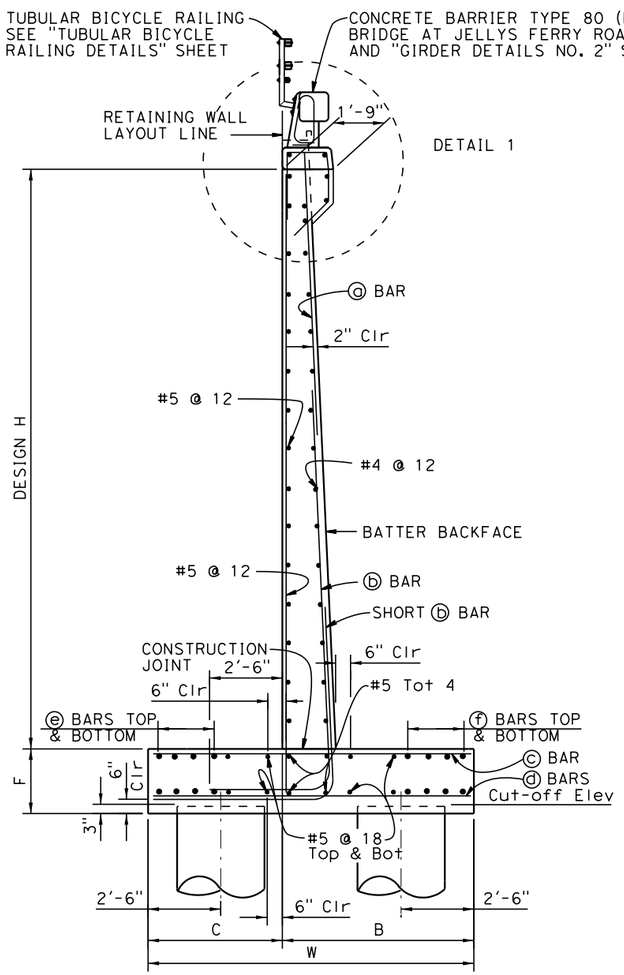

RETAINING WALL TYPE 1 (MOD) W/ PILES

No scale

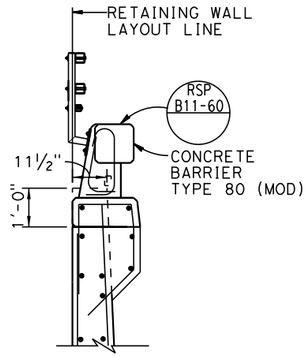

DETAIL 1

¾"=1'-0"

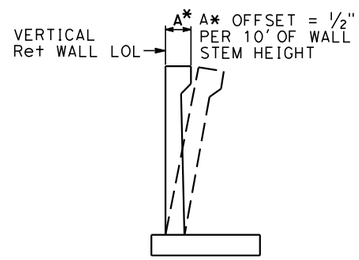

WALL OFFSET

No scale

Values for offsetting forms to be determined by the engineer

TABLE OF WALL DIMENSIONS AND REINFORCING STEEL				
DESIGN H	20'	22'	24'	26'
W	14'-0"	14'-0"	14'-3"	15'-9"
C	4'-0"	4'-3"	4'-9"	5'-3"
B	10'-0"	9'-9"	9'-6"	10'-6"
F PILE FOOTING	3'-0"	3'-0"	3'-0"	3'-0"
BATTER	1/2:12	1/2:12	5/8:12	3/4:12
A-BARS	#7 @ 12	#8 @ 12	#6 @ 6	#6 @ 6
B-BARS	#10 @ 6	#10 @ 6	#8 @ 6 ∞	#8 @ 6∞
ha	7'-0"	7'-0"	7'-6"	8'-6"
hb	13'-3"	16'-0"	16'-6"	17'-6"
C-BARS	#9 @ 6	#9 @ 6	#10 @ 6	#10 @ 6
D-BARS	#9 @ 12	#9 @ 12	#9 @ 12	#9 @ 12
E-BARS	8-#7 @ 12	8-#6 @ 12	8-#6 @ 12	10-#6 @ 12
F-BARS	12-#8 @ 12	12-#7 @ 12	12-#6 @ 12	12-#7 @ 12

NOTE:

Total ⓔ bars and ⓕ bars shown are total number of top and bottom bars combined.

NOTES:

1. All piles are 36"Ø CIDH concrete piles.
2. For Pile layout , see "RETAINING WALL LAYOUT" sheets.
3. For details not shown and drainage notes, see RSP B3-5
4. Footing cover, 1'-6" minimum.
5. AT ⓑ bars:
   No splices are allowed within H/4 above the top of footing
6. Provide #6 @ 10 ⓑ bars in addition to tabulated ⓑ bars over a distance of 8'-0" measured from all expansions joints, begin wall and end wall locations. Hook ⓑ bar into footing and reduce bar length as needed to maintain minimum clearance cover.
7. Extend ⓐ bars into barrier for stem with haunch.

NOTE:

"ha" and "hb" above ⓑ bars indicate distance from top of footing to upper end of ⓑ bars, see table.

"S" indicate ⓑ bars spacing in table.

: 2 bar bundle

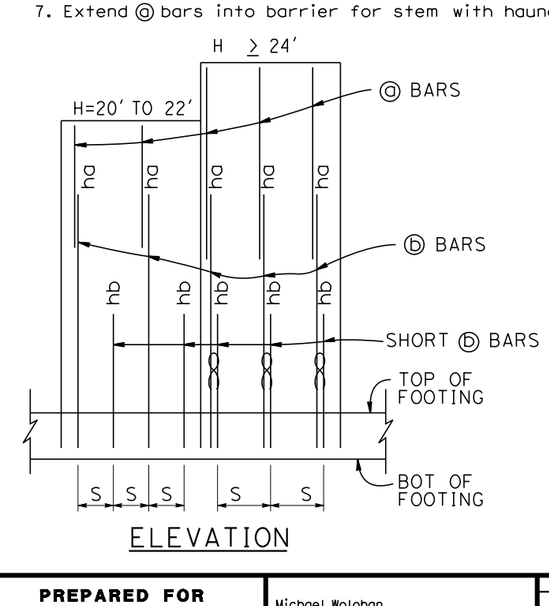

ELEVATION

DESIGN DATA

Design: AASHTO LRFD Bridge Design Specifications 6th edition with California Amendments

LS: Varied surcharge on level ground surface

CT: 54 kip maximum traffic impact loading evenly distributed over 10 feet at top of the barrier and 1:1 distribution down and outward

EQE: Mononabe-Okabe Method
K_h = 0.3
K_v = 0.0

Soil: Ø = 34°
γ = 125 pcf

Reinforced Concrete: f'c = 4000 psi
fy = 60,000 psi

Load Combinations and Limit States

Service I	Q=1.00DC+1.00EV+1.00EH+1.00LS
Service II	Q=1.00DC+1.00EV+1.00EH
Strength I	Q=αDC+βEV+1.50EH+1.75LS Q=1.25DC+1.35EV+0.90EH+1.75LS (for piles at heel)
Strength III	Q=αDC+βEV+1.50EH
Strength V	Q=αDC+βEV+1.50EH+1.35LS
Extreme I	Q=1.00DC+1.00EV+1.00EH+1.00EQD+1.00EQE
Extreme II	Q=1.00DC+1.00EV+1.00EH+1.00CT

Where:

Q: Force Effects
α: 1.25 or 0.90, Which ever Controls Design
β: 1.35 or 1.00, which ever Controls Design
DC: Dead Load of Structure Components
EV: Vertical Earth Fill Pressure
LS: Live Load Surcharge
EQE: Seismic Earth Pressure
EQD: Soil and Structure Components Inertia. Soil inertia ignored for stem design
CT: Vehicular Collision Force

R-3

65% SUBMITTAL, NOT FOR CONSTRUCTION

X DESIGN OVERSIGHT	DESIGN	BY M. Philipps	CHECKED
X SIGN OFF DATE	DETAILS	BY H. Hidalgo	CHECKED
	QUANTITIES	BY M. Philipps	CHECKED

PREPARED FOR **TEHAMA COUNTY PUBLIC WORKS DEPARTMENT**

Michael Wolohan
PROJECT ENGINEER

BRIDGE NO. 08C-0374
POST MILES X

SACRAMENTO RIVER BRIDGE AT JELLYS FERRY ROAD
RETAINING WALL DETAILS NO. 1

DESIGN DETAIL SHEET (ENGLISH) (REV. 03/14/12)

ORIGINAL SCALE IN INCHES FOR REDUCED PLANS 0 1 2 3

UNIT: X
PROJECT NUMBER & PHASE: X
CONTRACT NO.: X

DISREGARD PRINTS BEARING EARLIER REVISION DATES

REVISION DATES X

SHEET 80 OF 81

FILE => t:\sacramento\legacy\prj_file\710054 - jellys ferry bridge\500_engineering\520_structures\521_cadd\054JF_dgn\054JF-a-gg-rwdet01.dgn

USERNAME => hhidalgo DATE PLOTTED => 3/20/2015 TIME PLOTTED => 1:49:47 PM

DIST	COUNTY	ROUTE	POST MILES TOTAL PROJECT	SHEET No	TOTAL SHEETS
02	TEH	CR		81	138

REGISTERED CIVIL ENGINEER DATE

PLANS APPROVAL DATE

REGISTERED PROFESSIONAL ENGINEER Michael Wolohan No. 67743 Exp. 6/30/15 CIVIL STATE OF CALIFORNIA

T. Y. Lin International or its officers or agents shall not be responsible for the accuracy or completeness of scanned copies of this plan sheet.

T·Y·LIN INTERNATIONAL
1601 Response Road, Suite 260
SACRAMENTO, CA 95815

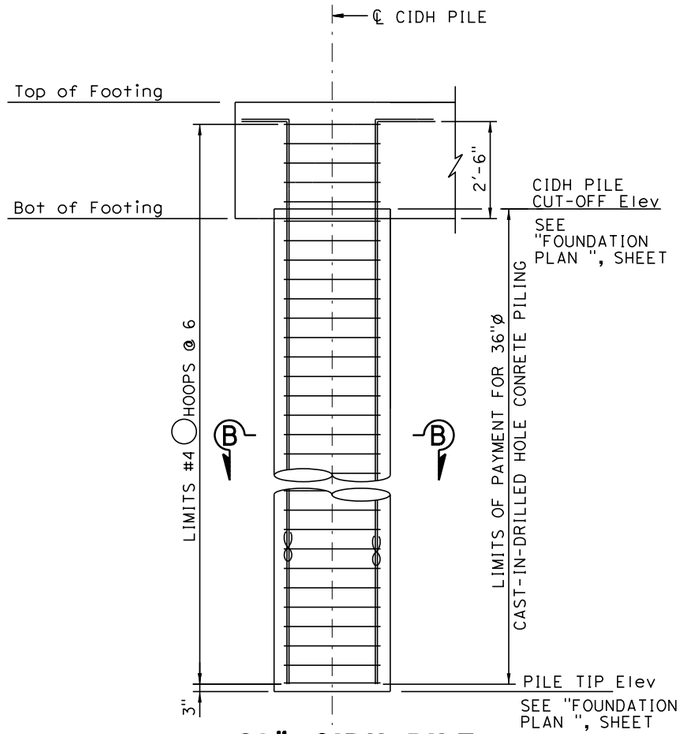

36" CIDH PILE
½"=1'-0"

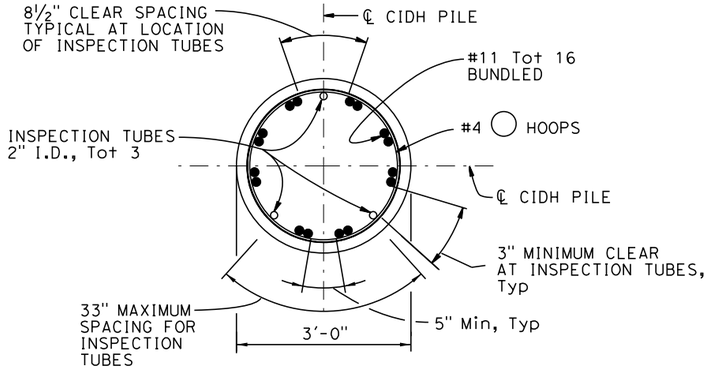

SECTION B-B
¾"=1'-0"

STANDARD PLANS DATED MAY, 2010

Sheet No.	Title
A10A	Abbreviations (sheet 1 of 2)
A10B	Abbreviations (sheet 2 of 2)
A10C	Lines and Symbols (sheet 1 of 3)
A10D	Lines and Symbols (sheet 2 of 3)
A10E	Lines and Symbols (sheet 3 of 3)
A62B	Limits of Payment for Excavation and Backfill Bridge Surcharge and Wall
B0-3	Bridge Details
RSP B3-5	Retaining Wall Details No. 1
RSP B11-60	Concrete Barrier Type 80 (Sheet 1 of 2)

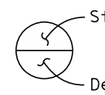

RETAINING WALL PILE DATA TABLE

Location	Pile Type	Nominal Resistance (KIPS) Compression	Nominal Resistance (KIPS) Tension	Cut-off Elevation (ft)	Design Tip Elevation (ft)	Specified Tip Elevation (ft)
H=26', S=10'-0"	36"ø CIDH	674	N/A	330.75	281 (1)	281
H=24', S=9'-9"	36"ø CIDH	645	N/A	330.75	282 (1)	283
H=22', S=12'-0"	36"ø CIDH	737	N/A	330.75	279 (1)	279
H=22', S=11'-3"	36"ø CIDH	636	N/A	330.75	283 (1)	283
H=20', S=13'-8"	36"ø CIDH	739	N/A	330.75	279 (1)	279
H=20', S=14'-8"	36"ø CIDH	759	N/A	330.75	278 (1)	278

Design Tip Elevations are controlled by the following demands:
(1) Compression, (2) Tension, (3) Lateral Loads

QUANTITIES

STRUCTURE EXCAVATION (RETAINING WALL)	798	CY
STRUCTURE BACKFILL (RETAINING WALL)	1277	CY
PERVIOUS BACKFILL MATERIAL (RETAINING WALL)	197	CY
36" CAST-IN-DRILLED-HOLE CONCRETE PILING (RETAINING WALL)	3743	LF
STRUCTURAL CONCRETE, RETAINING WALL	1222	CY
BAR REINFORCING STEEL (RETAINING WALL)	724080	LB
TUBULAR BICYCLE RAILING	432	LF
CONCRETE BARRIER TYPE 80 (MOD)	432	LF

65% SUBMITTAL, NOT FOR CONSTRUCTION

R-4

X
DESIGN OVERSIGHT
X
SIGN OFF DATE

	BY	CHECKED
DESIGN	M. Philipps	
DETAILS	H. Hidalgo	
QUANTITIES	M. Philipps	

PREPARED FOR
TEHAMA COUNTY
PUBLIC WORKS DEPARTMENT

Michael Wolohan
PROJECT ENGINEER

BRIDGE NO. 08C-0374
POST MILES X

SACRAMENTO RIVER BRIDGE AT JELLYS FERRY ROAD
RETAINING WALL DETAILS NO. 2

DESIGN DETAIL SHEET (ENGLISH) (REV. 03/14/12)

ORIGINAL SCALE IN INCHES FOR REDUCED PLANS 0 1 2 3

UNIT: X
PROJECT NUMBER & PHASE: X
CONTRACT NO.: X

DISREGARD PRINTS BEARING EARLIER REVISION DATES

REVISION DATES X

SHEET 81 OF 81

FILE => t:\sacramento\legacy\pri_file\710054 - jellys ferry bridge\500_engineering\520_structures\521_cadd\054JF_dgn\054JF-a-gg-rwdet02.dgn

USERNAME => phidalgo DATE PLOTTED => 3/20/2015 TIME PLOTTED => 11:49:49 PM

DIST	COUNTY	ROUTE	POST MILES TOTAL PROJECT	SHEET No	TOTAL SHEETS
02	TEH	CR		82	138

REGISTERED CIVIL ENGINEER DATE

PLANS APPROVAL DATE

REGISTERED PROFESSIONAL ENGINEER Michael Wolohan No. 67743 Exp. 6/30/15 CIVIL STATE OF CALIFORNIA

T. Y. Lin International or its officers or agents shall not be responsible for the accuracy or completeness of scanned copies of this plan sheet.

T·Y·LIN INTERNATIONAL
1601 Response Road, Suite 260
SACRAMENTO, CA 95815

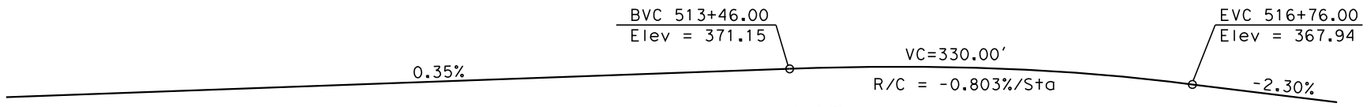

PROFILE
No Scale

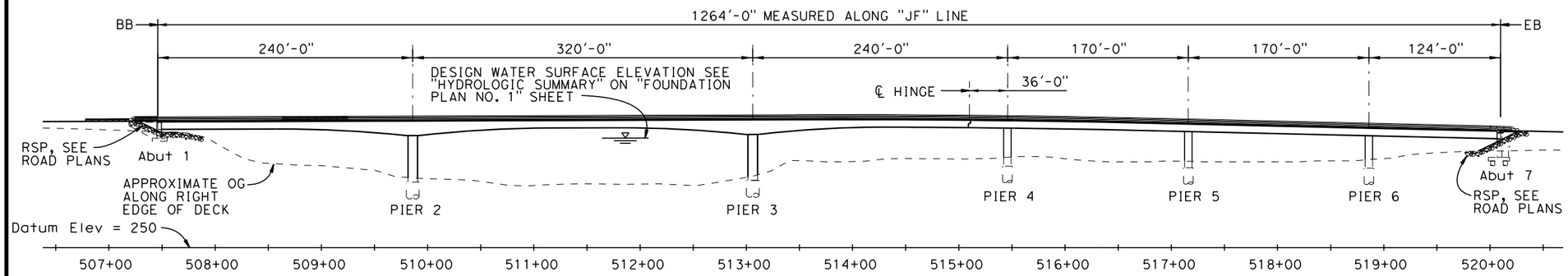

DEVELOPED ELEVATION
1"=60'

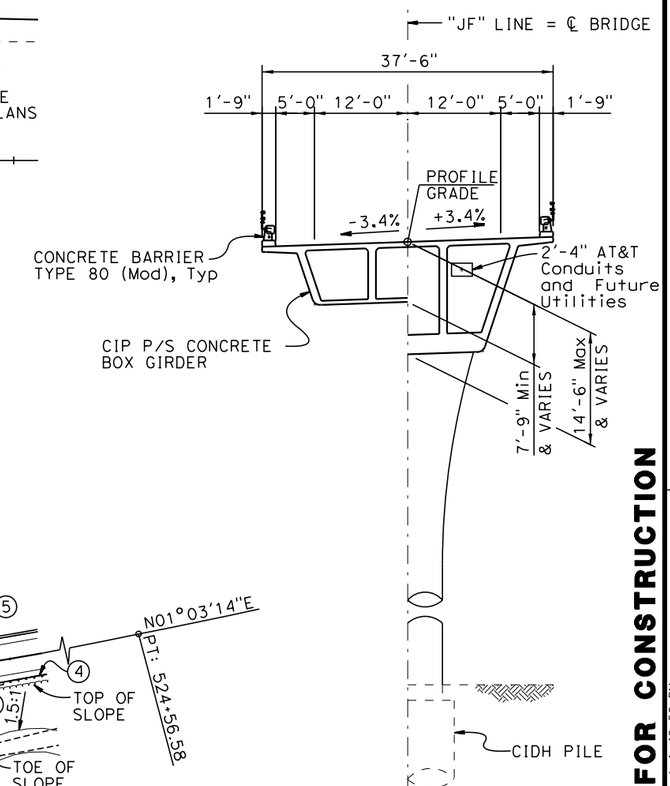

TYPICAL SECTION
1"=10'

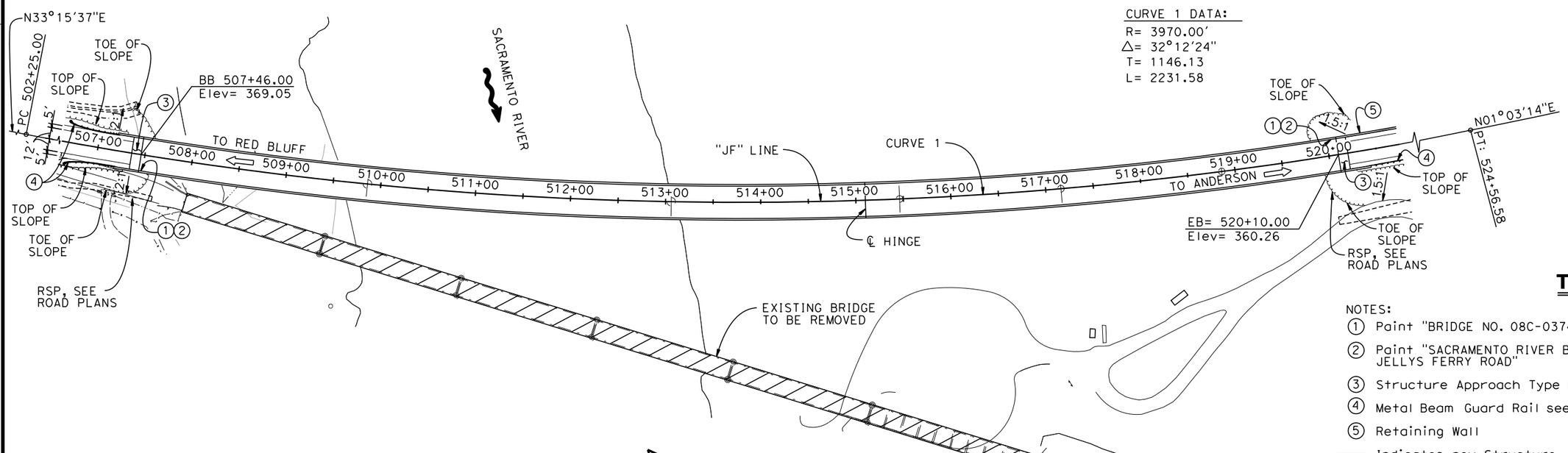

CURVE 1 DATA:
R= 3970.00'
Δ= 32°12'24"
T= 1146.13
L= 2231.58

PLAN
1"=60'

NOTES:
1. Paint "BRIDGE NO. 08C-0374"
2. Paint "SACRAMENTO RIVER BRIDGE AT JELLYS FERRY ROAD"
3. Structure Approach Type N(30S) (Mod)
4. Metal Beam Guard Rail see "Road Plans"
5. Retaining Wall

—— Indicates new Structure
—·· Indicates Existing Structure
Indicates Bridge Removal (Br. No. 08C-043)

65% SUBMITTAL, NOT FOR CONSTRUCTION

USERNAME => hhidalgo DATE PLOTTED => 3/20/2015 TIME PLOTTED => 1:49:52 PM

X DESIGN OVERSIGHT	DESIGN	BY M. Wolohan	CHECKED	LOAD & RESISTANCE FACTOR DESIGN	LIVE LOADING: HL93 W/"LOW-BOY" AND PERMIT DESIGN VEHICLE	
X SIGN OFF DATE	DETAILS	BY H. Hidalgo	CHECKED	LAYOUT	BY	CHECKED X
	QUANTITIES	BY M. Philipps	CHECKED	SPECIFICATIONS	BY	PLANS AND SPECS COMPARED X

PREPARED FOR
TEHAMA COUNTY
PUBLIC WORKS DEPARTMENT

Michael Wolohan
PROJECT ENGINEER

BRIDGE NO. 08C-0374
POST MILES

SACRAMENTO RIVER BRIDGE AT JELLYS FERRY ROAD
GENERAL PLAN

DESIGN GENERAL PLAN SHEET (ENGLISH) (REV. 03/14/12)

ORIGINAL SCALE IN INCHES FOR REDUCED PLANS 0 1 2 3

UNIT: X
PROJECT NUMBER & PHASE: X
CONTRACT NO.: X

DISREGARD PRINTS BEARING EARLIER REVISION DATES

REVISION DATES X

SHEET 1 OF 33

FILE => t:\sacramento\legacy\prj_file\710054 - jellys ferry bridge\500_engineering\520_structures\521_cadd\054JF_dgn\054JF-a-gp01.dgn

DIST	COUNTY	ROUTE	POST MILES TOTAL PROJECT	SHEET No	TOTAL SHEETS
02	TEH	CR		83	138

REGISTERED CIVIL ENGINEER DATE

PLANS APPROVAL DATE

REGISTERED PROFESSIONAL ENGINEER Michael Wolohan No. 67743 Exp. 6/30/15 CIVIL STATE OF CALIFORNIA

T. Y. Lin International or its officers or agents shall not be responsible for the accuracy or completeness of scanned copies of this plan sheet.

T·Y·LIN INTERNATIONAL
1601 Response Road, Suite 260
SACRAMENTO, CA 95815

GENERAL NOTES
LOAD AND RESISTANCE FACTOR DESIGN

DESIGN: AASHTO LRFD Bridge Design Specifications, 6th Edition and the Caltrans Amendments, preface dated January 2014

SEISMIC DESIGN: Caltrans Seismic Design Criteria (SDC) Version 1.7 April 2013

DEAD LOAD: Includes 35 psf for future wearing surface

LIVE LOADING: HL93 and permit design load

SEISMIC LOADING: Soil Profile: V_{S30} = 1475 ft/sec
Moment Magnitude: Mmax = 6.60±0.25
Peak Ground Acceleration 0.276g

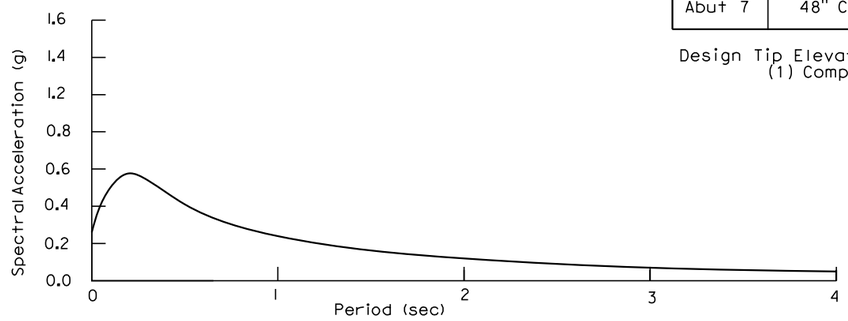

ARS CURVE

REINFORCED CONCRETE: fy = 60 ksi
f'c = See "CONCRETE STRENGTHS AND TYPE LIMITS"
n = 8

PRESTRESSED CONCRETE: See prestressing notes on "GIRDER LAYOUT NO. 1" sheet.

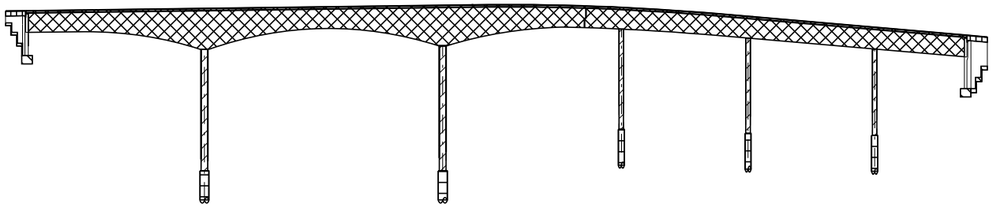

- Structural Concrete, Bridge
- Structural Concrete, Bridge (f'c = 4,000 psi @ 28 Days)
- Structural Concrete, Bridge (f'c = 5,000 psi @ 28 Days)
- Cast-in-Drilled-Hole Concrete Pile (f'c = 4,000 psi @ 28 Days)
- Structural Concrete, Bridge Footing
- Structural Concrete Approach Slab TYPE N(30S)

CONCRETE STRENGTHS AND TYPE LIMITS

No Scale

PILE DATA TABLE

Location	Pile Type	Nominal Resistance (KIPS) Compression	Nominal Resistance (KIPS) Tension	Cut-off Elevation (FT)	Design Tip Elevation (FT)	Specified Tip Elev (FT)
PIER 2	144" CIDH	12490	N/A	313.00	219(1), 232 (3)	219
PIER 3	144" CIDH	11850	N/A	312.00	220(1), 231 (3)	220
PIER 4	108" CIDH	7840	N/A	323.00	227(1), 251 (3)	227
PIER 5	108" CIDH	6375	N/A	328.00	230(1), 256 (3)	230
PIER 6	108" CIDH	6395	N/A	328.00	229(1), 256 (3)	229
Abut 7	48" CIDH	1120	800	331.25	264(1), 302(2), 290 (3)	264

Design Tip Elevations are controlled by the following demands:
(1) Compression, (2) Tension, (3) Lateral loads.

INDEX TO BRIDGE PLANS

SHEET NO.	TITLE
1	GENERAL PLAN
2	INDEX TO PLANS
3	DECK CONTOURS
4	FOUNDATION PLAN NO. 1
5	FOUNDATION PLAN NO. 2
6	ABUTMENT 1 LAYOUT
7	ABUTMENT 7 LAYOUT
8	ABUTMENT DETAILS NO. 1
9	ABUTMENT DETAILS NO. 2
10	ABUTMENT DETAILS NO. 3
11	PIER 2 & 3 DETAILS NO. 1
12	PIER 2 & 3 DETAILS NO. 2
13	PIER 4, 5 & 6 DETAILS NO. 1
14	PIER 4, 5 & 6 DETAILS NO. 2
15	PIER DETAILS
16	TYPICAL SECTION
17	GIRDER LAYOUT NO. 1
18	GIRDER LAYOUT NO. 2
19	GIRDER LAYOUT NO. 3
20	GIRDER DETAILS NO. 1
21	GIRDER DETAILS NO. 2
22	HINGE LAYOUT
23	HINGE DETAILS NO. 1
24	HINGE DETAILS NO. 2
25	PTFE/SPHERICAL EXPANSION BEARING DETAILS
26	ABUTMENT 1 JOINT SEAL ASSEMBLY DETAILS
27	STRIP JOINT SEAL ASSEMBLY
28	DECK DRAINAGE DETAILS
29	STRUCTURE APPROACH TYPE N(30S) (Mod)
30	STRUCTURE APPROACH DRAINAGE DETAILS
31	TUBULAR BICYCLE RAILING DETAILS
32	LOG OF TEST BORINGS 1 OF 2
33	LOG OF TEST BORINGS 2 OF 2

STANDARD PLANS DATED MAY, 2010

	DETAIL	DESCRIPTION
	A10A	Abbreviations (sheet 1 of 2)
RSP	A10B	Abbreviations (sheet 2 of 2)
	A10C	Lines and Symbols (sheet 1 of 3)
	A10D	Lines and Symbols (sheet 2 of 3)
	A10E	Lines and Symbols (sheet 3 of 3)
	A62C	Limits of Payment for Excavation and Backfill Bridge
	B0-1	Bridge Details
	B0-3	Bridge Details
	B0-5	Bridge Details
	B0-13	Bridge Details
	B7-1	Box Girder Details
	B7-7	Deck Drains - Type D-3
	B7-8	Deck Drainage Details
	B7-10	Utility Opening - Box Girder
	B7-11	Utility Details
RSP	B8-5	Cast-In-Place Prestressed Girder Details
RSP	B11-60	Concrete Barrier Type 80 (Sheet 1 of 2)
RSP	B11-61	Concrete Barrier Type 80 (Sheet 2 of 2)
	B14-5	Water Supply Line (Details) (Pipe size less than 4")

Standard plan sheet no.

Detail no.

QUANTITIES

BRIDGE REMOVAL	1	LS
STRUCTURE EXCAVATION (BRIDGE)	568	CY
STRUCTURE BACKFILL (BRIDGE)	729	CY
STRUCTURAL CONCRETE, BRIDGE FOOTING	175	CY
STRUCTURAL CONCRETE, BRIDGE	4799	CY
STRUCTURAL CONCRETE, APPROACH SLAB (TYPE N(30S) MODIFIED)	56	CY
BAR REINFORCING STEEL (BRIDGE)	1909964	LB
CONCRETE BARRIER TYPE 80 (MODIFIED)	2586	LF
TUBULAR BICYCLE RAILING	2586	LF
PRESTRESSING CAST-IN-PLACE CONCRETE	1	LS
108" CAST-IN-DRILLED HOLE CONCRETE PILING	314	LF
144" CAST-IN-DRILLED HOLE CONCRETE PILING	189	LF
48" CAST-IN-DRILLED HOLE CONCRETE PILING	538	EA
PTFE SPHERICAL BEARING	12	LF
JOINT SEAL ASSEMBLY (MR 3 1/2")	38	LF
JOINT SEAL ASSEMBLY (MR 6")	38	LF
JOINT SEAL ASSEMBLY (MR 9")	38	LB
BRIDGE DECK DRAINAGE SYSTEM	35252	LB
10" WELDED STEEL PIPE CASING (BRIDGE)	25	LF
16" WELDED STEEL PIPE CASING (BRIDGE)	25	LF
20" WELDED STEEL PIPE CASING (BRIDGE)	50	LF

65% SUBMITTAL, NOT FOR CONSTRUCTION

USERNAME => hhidalgo DATE PLOTTED => 3/20/2015 TIME PLOTTED => 1:49:54 PM

X
DESIGN OVERSIGHT
X
SIGN OFF DATE

	BY	CHECKED
DESIGN		
DETAILS	H. Hidalgo	
QUANTITIES	M. Philipps	

PREPARED FOR
TEHAMA COUNTY
PUBLIC WORKS DEPARTMENT

Michael Wolohan
PROJECT ENGINEER

BRIDGE NO. 08C-0374
POST MILES X

SACRAMENTO RIVER BRIDGE AT JELLYS FERRY ROAD
INDEX TO PLANS

DESIGN DETAIL SHEET (ENGLISH) (REV. 03/14/12)

ORIGINAL SCALE IN INCHES FOR REDUCED PLANS 0 1 2 3

UNIT: X
PROJECT NUMBER & PHASE: X
CONTRACT NO.: X

DISREGARD PRINTS BEARING EARLIER REVISION DATES

REVISION DATES X

SHEET 2 OF 33

FILE => t:\sacramento\legacy\pri_file\710054 - jellys ferry bridge\500_engineering\520_structures\521_cadd\054JF_dgn\054JF-a-itp.dgn

DIST	COUNTY	ROUTE	POST MILES TOTAL PROJECT	SHEET No	TOTAL SHEETS
02	TEH	CR		84	138

REGISTERED CIVIL ENGINEER DATE

PLANS APPROVAL DATE

REGISTERED PROFESSIONAL ENGINEER
Michael Wolohan
No. 67743
Exp. 6/30/15
CIVIL
STATE OF CALIFORNIA

T. Y. Lin International or its officers or agents shall not be responsible for the accuracy or completeness of scanned copies of this plan sheet.

T·Y·LIN INTERNATIONAL
1601 Response Road, Suite 260
SACRAMENTO, CA 95815

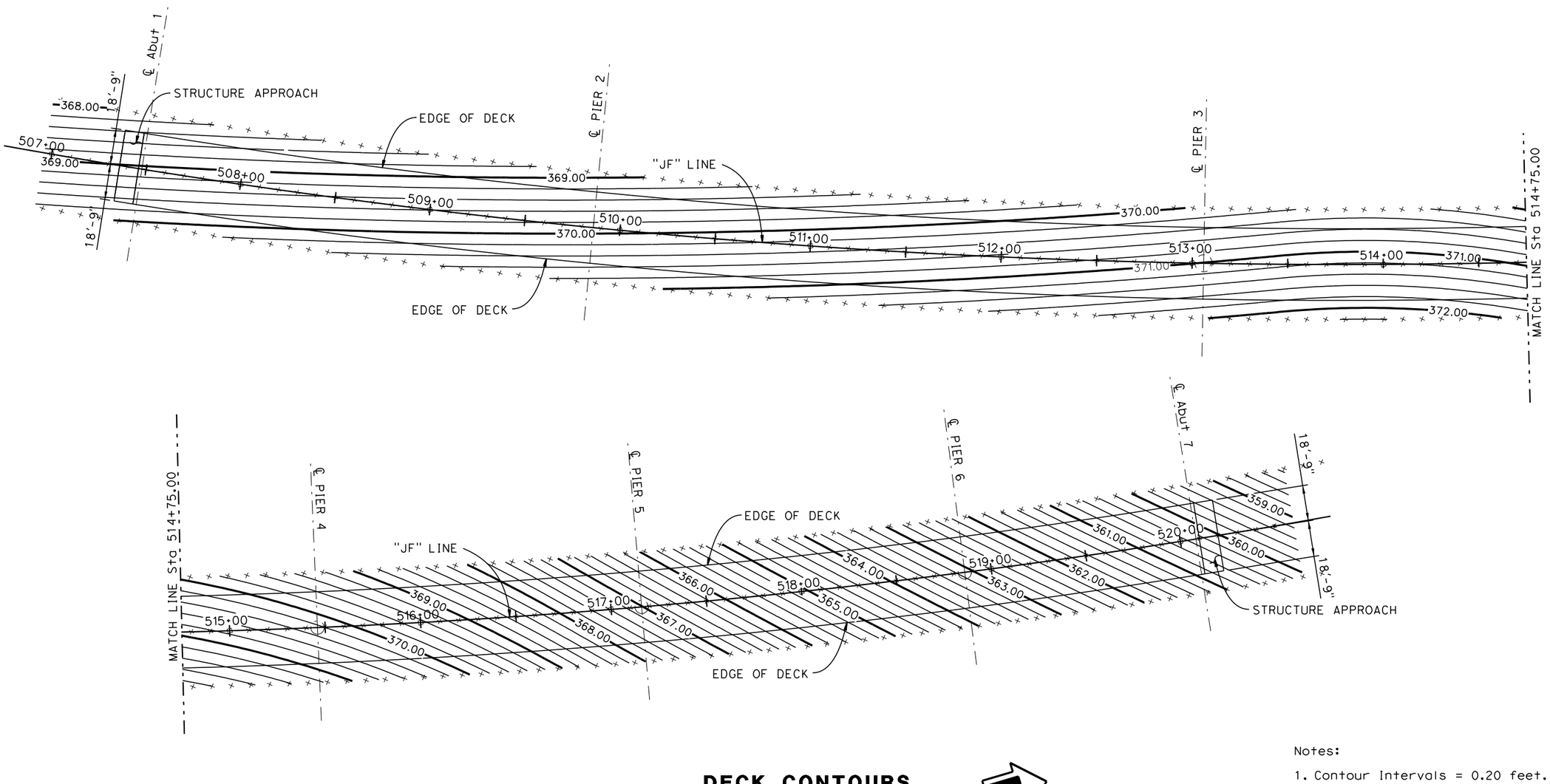

DECK CONTOURS

1"=30'

Notes:

1. Contour Intervals = 0.20 feet.
2. Contours do not include camber.
3. x - Indicates 10' interval measured along station line.

65% SUBMITTAL, NOT FOR CONSTRUCTION

X DESIGN OVERSIGHT		DESIGN	BY	CHECKED	
X SIGN OFF DATE		DETAILS	BY H. Hidalgo	CHECKED	
		QUANTITIES	BY M. Philipps	CHECKED	

PREPARED FOR
TEHAMA COUNTY
PUBLIC WORKS DEPARTMENT

Michael Wolohan
PROJECT ENGINEER

BRIDGE NO. 08C-0374
POST MILES X

SACRAMENTO RIVER BRIDGE AT JELLYS FERRY ROAD
DECK CONTOURS

DESIGN DETAIL SHEET (ENGLISH) (REV. 03/14/12)

ORIGINAL SCALE IN INCHES FOR REDUCED PLANS 0 1 2 3

UNIT: X
PROJECT NUMBER & PHASE: X
CONTRACT NO.: X

DISREGARD PRINTS BEARING EARLIER REVISION DATES

REVISION DATES X

SHEET 3 OF 33

FILE => t:\sacramento\legacy\prj_file\710054 - jellys ferry bridge\500_engineering\520_structures\521_cadd\054JF_dgn\054JF-d-dc01.dgn

USERNAME => hhidalgo DATE PLOTTED => 3/20/2015 TIME PLOTTED => 1:49:56 PM

DIST	COUNTY	ROUTE	POST MILES TOTAL PROJECT	SHEET No	TOTAL SHEETS
02	TEH	CR		85	138

REGISTERED CIVIL ENGINEER DATE

PLANS APPROVAL DATE

REGISTERED PROFESSIONAL ENGINEER Michael Wolohan No. 67743 Exp. 6/30/15 CIVIL STATE OF CALIFORNIA

T. Y. Lin International or its officers or agents shall not be responsible for the accuracy or completeness of scanned copies of this plan sheet.

T·Y·LIN INTERNATIONAL
1601 Response Road, Suite 260
SACRAMENTO, CA 95815

HYDROLOGIC SUMMARY (WITH DRIFT)

	Design Flood	Base Flood	Overtopping Flood	Flood of Record
Frequency (Years)	50	100	200	20
Discharge (Cubic feet per second)	171500	190000	207000	149100
Water Surface (Elevation at bridge)	349.0	350.7	357.2	346.8

Flood plain data is based upon information available when the plans were prepared and are shown to meet federal requirements. The accuracy of said information is not warranted by the State, County, or City and interested or affected parties should make their own investigations. Drainage Area = 8900 square miles.
Ordinary high water mark elevation = 333.0

SPREAD FOOTING DATA TABLE

Location	SERVICE[2] PERMISSIBLE NET CONTRACT STRESS (SETTLEMENT) (ksf)	STRENGTH/CONSTRUCTION[3] FACTORED GROSS NOMINAL BEARING RESISTANCE ϕ_b= 0.55 (ksf)	EXTREME EVENT[3] FACTORED GROSS NOMINAL BEARING RESISTANCE ϕ_b= 1.00 (ksf)
Abut 1	7.0	11.5	21.0

Notes:

1. Stresses and resistances were calculated for controlling load combinations.
2. Controlling load combination for Service Limit State is the one resulting in the highest ratio of $q_{n,u}/q_{pn}$ for foundations on soil or $q_{g,max}/q_R$ for foundations on rock.
3. For Strength, Construction, and Extreme Event limit States, controlling load combination is the one resulting in the highest ratio of $q_{g,u}/q_R$ for foundations on soil, or $q_{g,max}/q_R$ for foundations on rock.

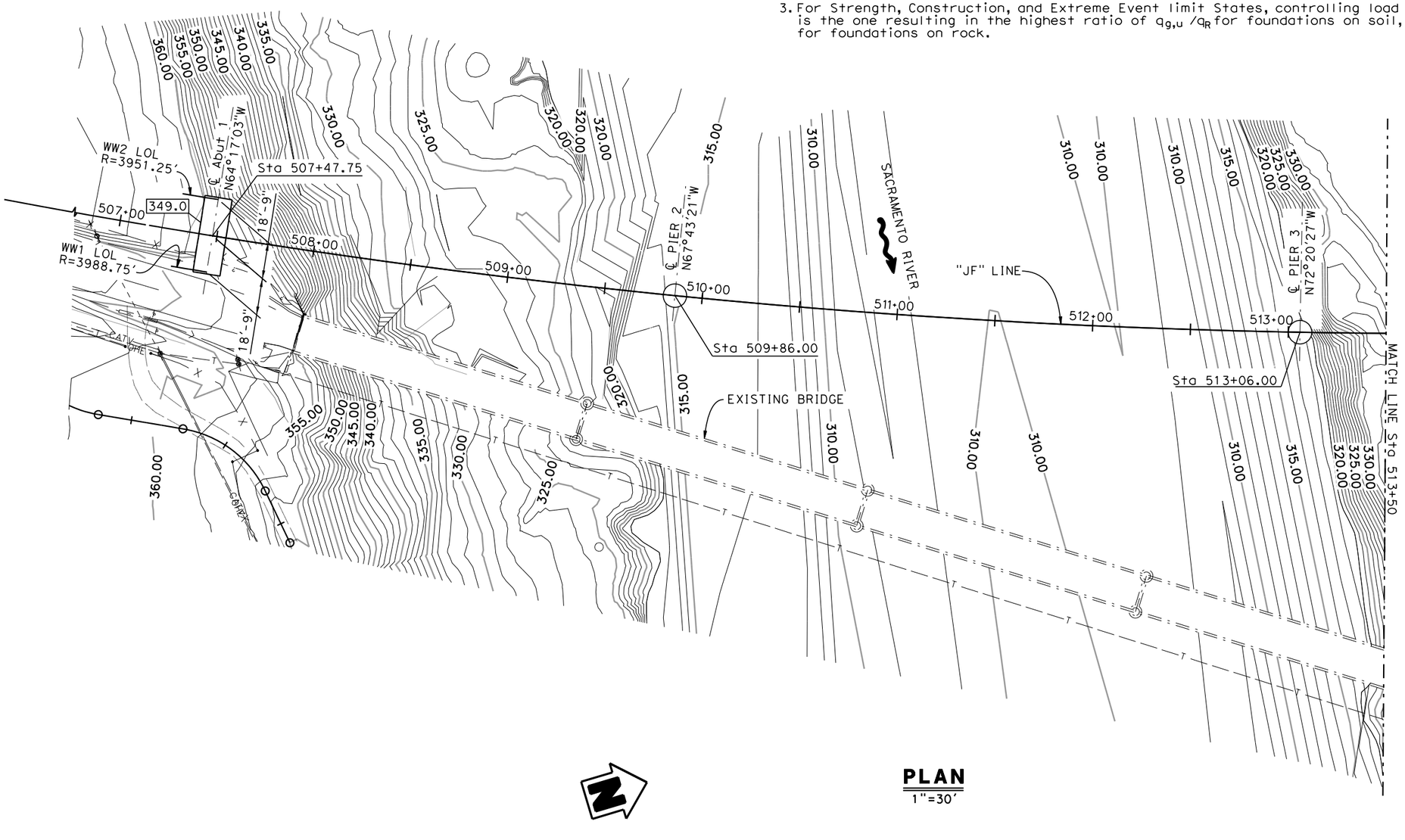

PLAN
1"=30'

Legend:

- Indicates bottom of footing elevation
- Indicates Existing Bridge
- Indicates CIDH Pile
- —T— Overhead Telephone lines to be relocated through bridge
- —CATV— Overhead Cable TV Lines
- —OHE— Overhead Electrical Lines

65% SUBMITTAL, NOT FOR CONSTRUCTION

GEOTECHNICAL PROFESSIONAL APPROVAL DATE

X DESIGN OVERSIGHT	SCALE: X	VERT.DATUM NAVD 88	HORZ.DATUM NAD 83	DESIGN	BY M. Wolohan	CHECKED	
X SIGN OFF DATE	PHOTOGRAMMETRY AS OF: X	ALIGNMENT TIES X		DETAILS	BY H. Hidalgo	CHECKED	
	SURVEYED BY X	DRAFTED BY X		QUANTITIES	BY M. Philipps	CHECKED	
	FIELD CHECKED BY X	CHECKED BY X					

PREPARED FOR
TEHAMA COUNTY
PUBLIC WORKS DEPARTMENT

Michael Wolohan
PROJECT ENGINEER

BRIDGE NO. 08C-0374
POST MILES

SACRAMENTO RIVER BRIDGE AT JELLYS FERRY ROAD
FOUNDATION PLAN NO. 1

FOUNDATION PLAN SHEET (ENGLISH) (REV. 03/14/12)

ORIGINAL SCALE IN INCHES FOR REDUCED PLANS 0 1 2 3

UNIT: X
PROJECT NUMBER & PHASE: X
CONTRACT NO.: X

DISREGARD PRINTS BEARING EARLIER REVISION DATES

REVISION DATES X

SHEET 4 OF 33

FILE => t:\sacramento\legacy\pri_file\710054 - jellys ferry bridge\500_engineering\520_structures\521_cadd\054JF_dgn\054JF-e-fnp101.dgn

USERNAME => hhidalgo DATE PLOTTED => 3/20/2015 TIME PLOTTED => 1:49:59 PM

DIST	COUNTY	ROUTE	POST MILES TOTAL PROJECT	SHEET No	TOTAL SHEETS
02	TEH	CR		86	138

REGISTERED CIVIL ENGINEER DATE

PLANS APPROVAL DATE

REGISTERED PROFESSIONAL ENGINEER
Michael Wolohan
No. 67743
Exp. 6/30/15
CIVIL
STATE OF CALIFORNIA

T. Y. Lin International or its officers or agents shall not be responsible for the accuracy or completeness of scanned copies of this plan sheet.

T·Y·LIN INTERNATIONAL
1601 Response Road, Suite 260
SACRAMENTO, CA 95815

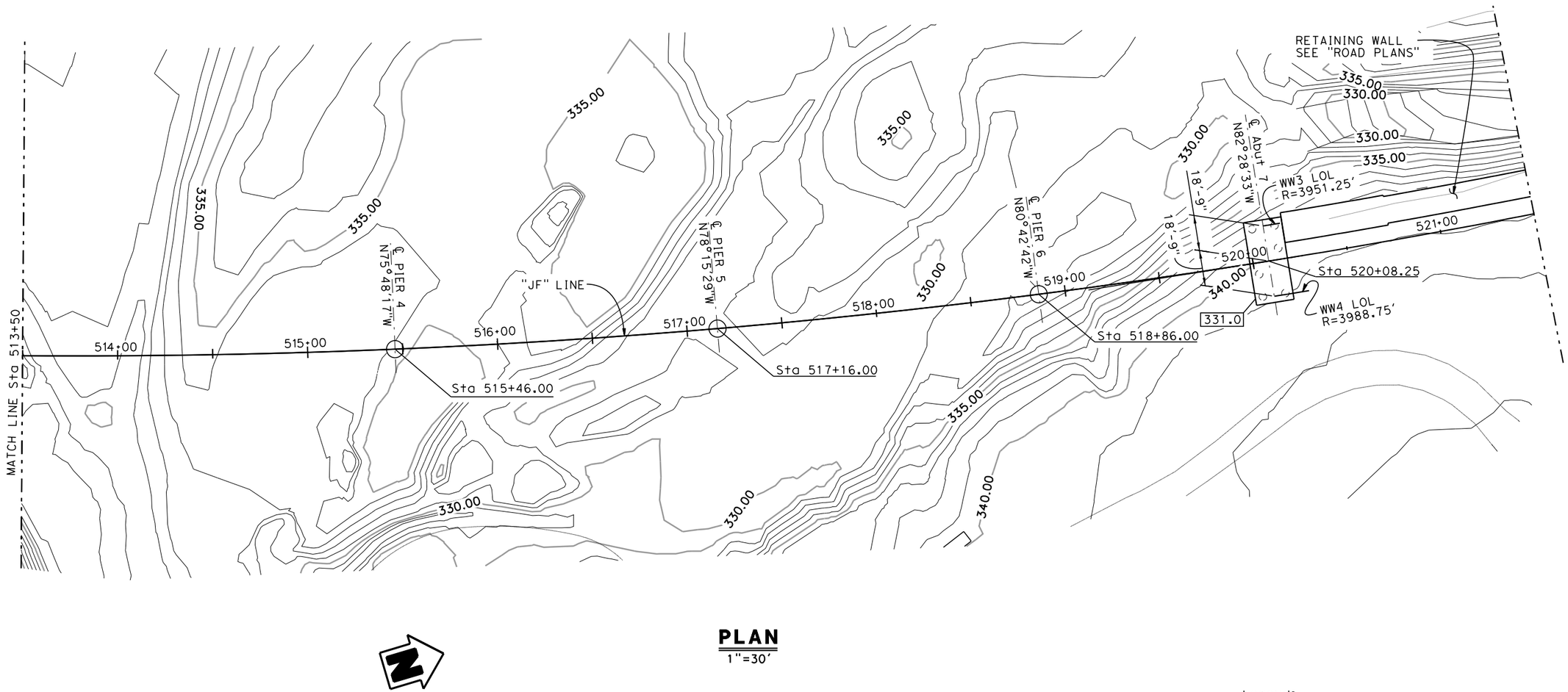

PLAN
1"=30'

Legend:

Indicates bottom of footing elevation

Indicates CIDH Pile

65% SUBMITTAL, NOT FOR CONSTRUCTION

GEOTECHNICAL PROFESSIONAL APPROVAL DATE

X	SCALE: X	VERT.DATUM NAVD 88	HORZ.DATUM NAD 83	DESIGN	BY M. Wolohan	CHECKED	
DESIGN OVERSIGHT	PHOTOGRAMMETRY AS OF: X	ALIGNMENT TIES X		DETAILS	BY H. Hidalgo	CHECKED	
X	SURVEYED BY X	DRAFTED BY X		QUANTITIES	BY M. Philipps	CHECKED	
SIGN OFF DATE	FIELD CHECKED BY X	CHECKED BY X					

PREPARED FOR
TEHAMA COUNTY
PUBLIC WORKS DEPARTMENT

Michael Wolohan
PROJECT ENGINEER

BRIDGE NO. 08C-0374
POST MILES

SACRAMENTO RIVER BRIDGE AT JELLYS FERRY ROAD
FOUNDATION PLAN NO. 2

FOUNDATION PLAN SHEET (ENGLISH) (REV. 03/14/12)

ORIGINAL SCALE IN INCHES FOR REDUCED PLANS 0 1 2 3

UNIT: X
PROJECT NUMBER & PHASE: X
CONTRACT NO.: X

DISREGARD PRINTS BEARING EARLIER REVISION DATES

REVISION DATES: X

SHEET 5 OF 33

FILE => t:\sacramento\legacy\prj_file\710054 - jellys ferry bridge\500_engineering\520_structures\521_cadd\054JF_dgn\054JF-e-fnpl02.dgn

USERNAME => hhidalgo DATE PLOTTED => 3/20/2015 TIME PLOTTED => 1:50:01 PM

DIST	COUNTY	ROUTE	POST MILES TOTAL PROJECT	SHEET No	TOTAL SHEETS
02	TEH	CR		87	138

REGISTERED CIVIL ENGINEER DATE

PLANS APPROVAL DATE

REGISTERED PROFESSIONAL ENGINEER Michael Wolohan No. 67743 Exp. 6/30/15 CIVIL STATE OF CALIFORNIA

T. Y. Lin International or its officers or agents shall not be responsible for the accuracy or completeness of scanned copies of this plan sheet.

T·Y·LIN INTERNATIONAL
1601 Response Road, Suite 260
SACRAMENTO, CA 95815

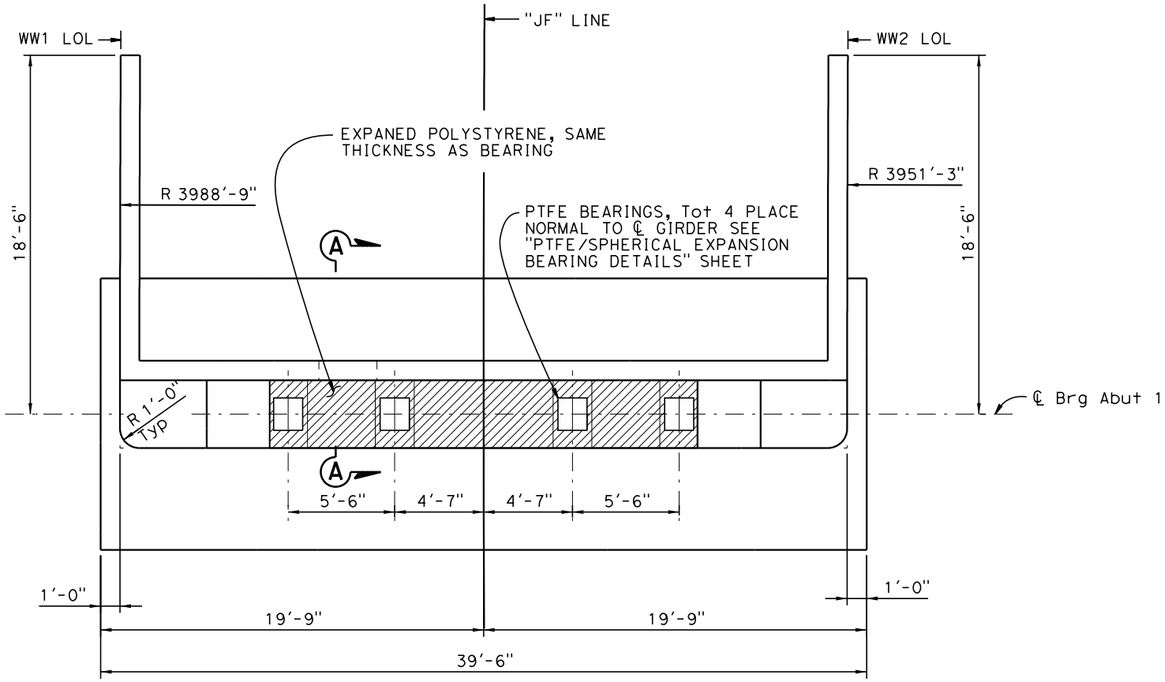

PLAN
1/4"=1'-0"

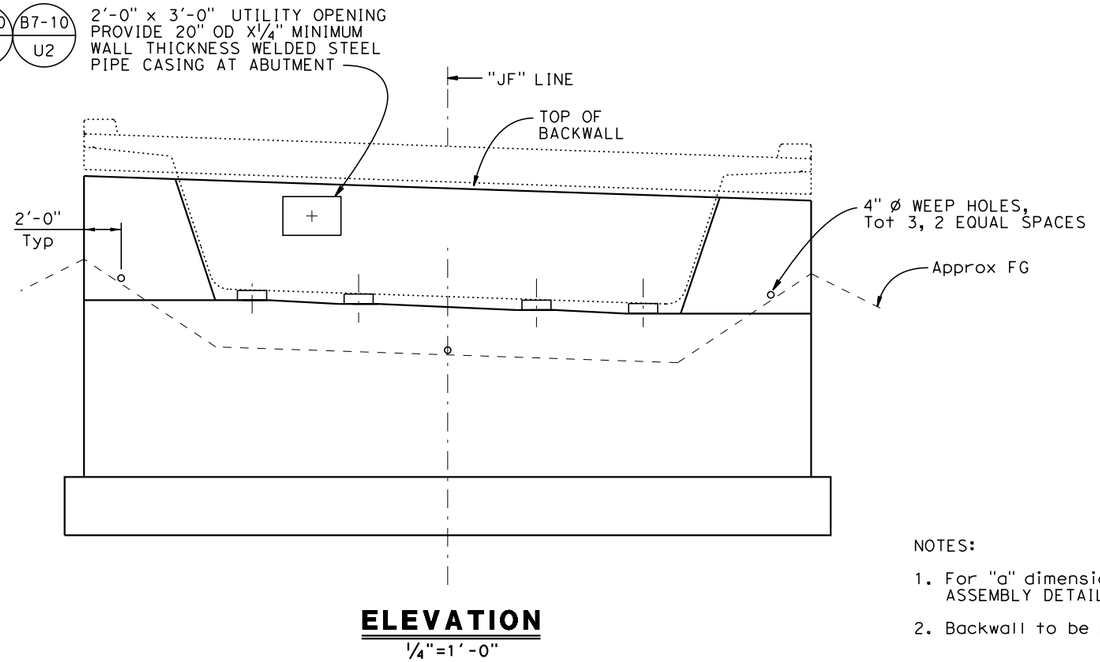

ELEVATION
1/4"=1'-0"

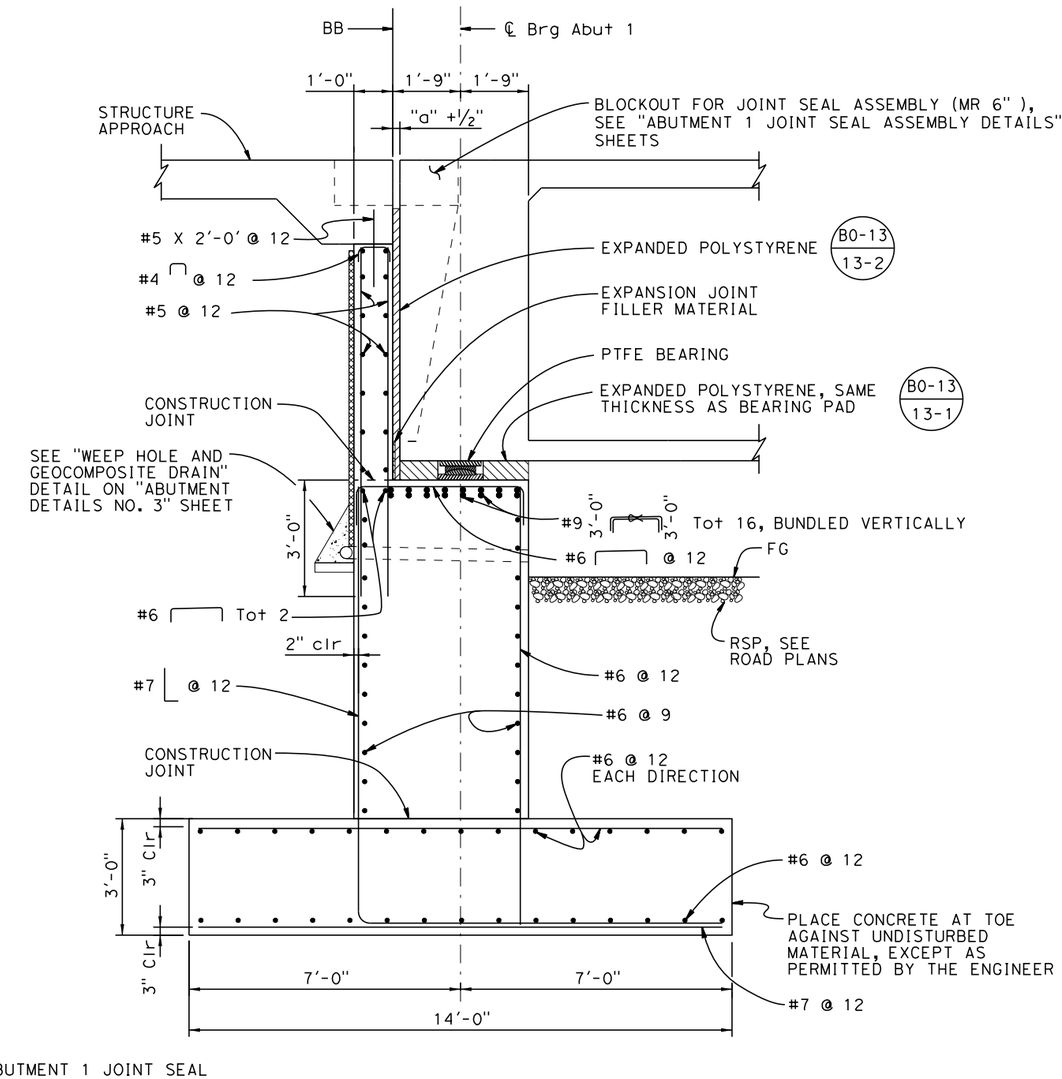

SECTION A-A
1/2"=1'-0"

NOTES:

1. For "a" dimensions, see "ABUTMENT 1 JOINT SEAL ASSEMBLY DETAILS", sheet.
2. Backwall to be placed after prestressing.

65% SUBMITTAL, NOT FOR CONSTRUCTION

X DESIGN OVERSIGHT	DESIGN	BY M. Philipps	CHECKED
X SIGN OFF DATE	DETAILS	BY H. Hidalgo	CHECKED
	QUANTITIES	BY M. Philipps	CHECKED

PREPARED FOR
TEHAMA COUNTY
PUBLIC WORKS DEPARTMENT

Michael Wolohan
PROJECT ENGINEER

BRIDGE NO. 08C-0374
POST MILES X

SACRAMENTO RIVER BRIDGE AT JELLYS FERRY ROAD
ABUTMENT 1 LAYOUT

DESIGN DETAIL SHEET (ENGLISH) (REV. 03/14/12)

ORIGINAL SCALE IN INCHES FOR REDUCED PLANS 0 1 2 3

UNIT: X
PROJECT NUMBER & PHASE: X
CONTRACT NO.: X

DISREGARD PRINTS BEARING EARLIER REVISION DATES

REVISION DATES X

SHEET 6 OF 33

USERNAME => hhidalgo DATE PLOTTED => 3/20/2015 TIME PLOTTED => 11:50:04 PM

FILE => t:\sacramento\legacy\prj_file\710054 - jellys ferry bridge\500_engineering\520_structures\521_cadd\054JF_dgn\054JF-f-a01_lo1.dgn

DIST	COUNTY	ROUTE	POST MILES TOTAL PROJECT	SHEET No	TOTAL SHEETS
02	TEH	CR		88	138

REGISTERED CIVIL ENGINEER DATE

PLANS APPROVAL DATE

REGISTERED PROFESSIONAL ENGINEER Michael Wolohan No. 67743 Exp. 6/30/15 CIVIL STATE OF CALIFORNIA

T. Y. Lin International or its officers or agents shall not be responsible for the accuracy or completeness of scanned copies of this plan sheet.

T·Y·LIN INTERNATIONAL
1601 Response Road, Suite 260
SACRAMENTO, CA 95815

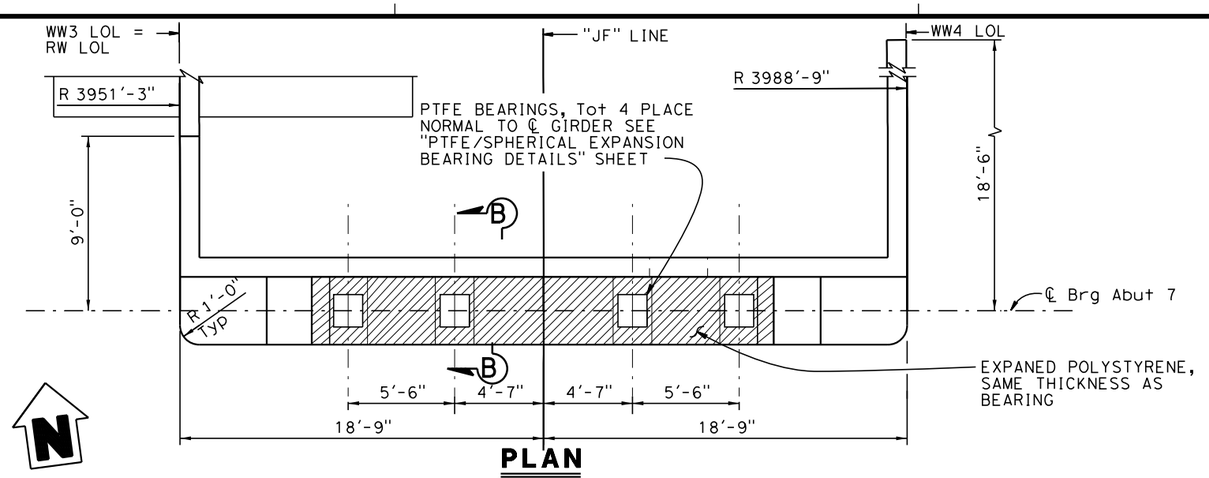

PLAN
1/4"=1'-0"

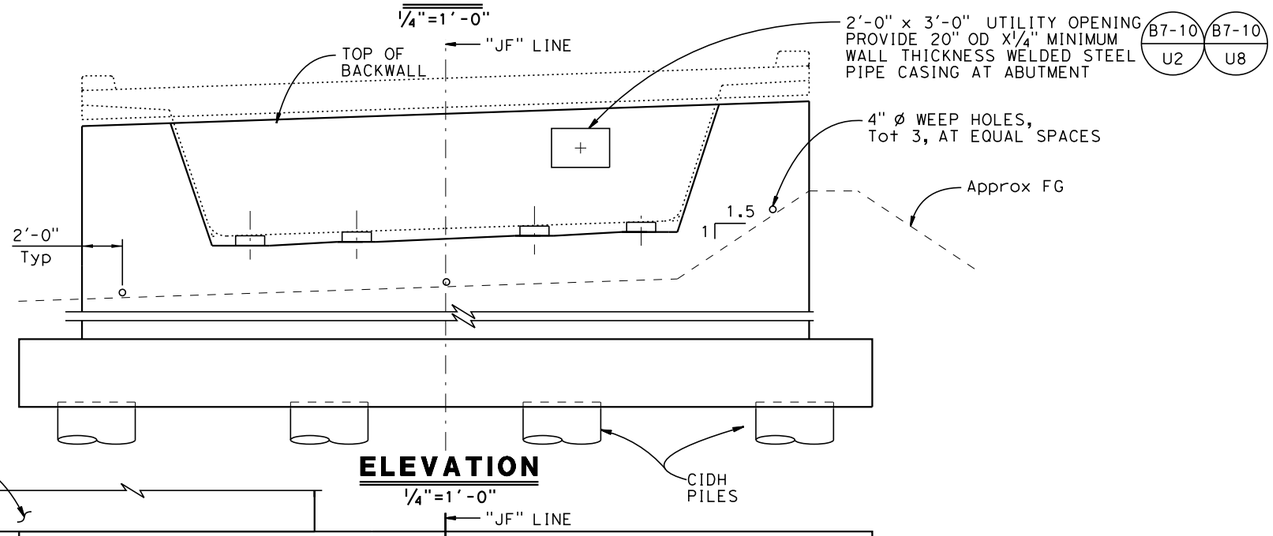

ELEVATION
1/4"=1'-0"

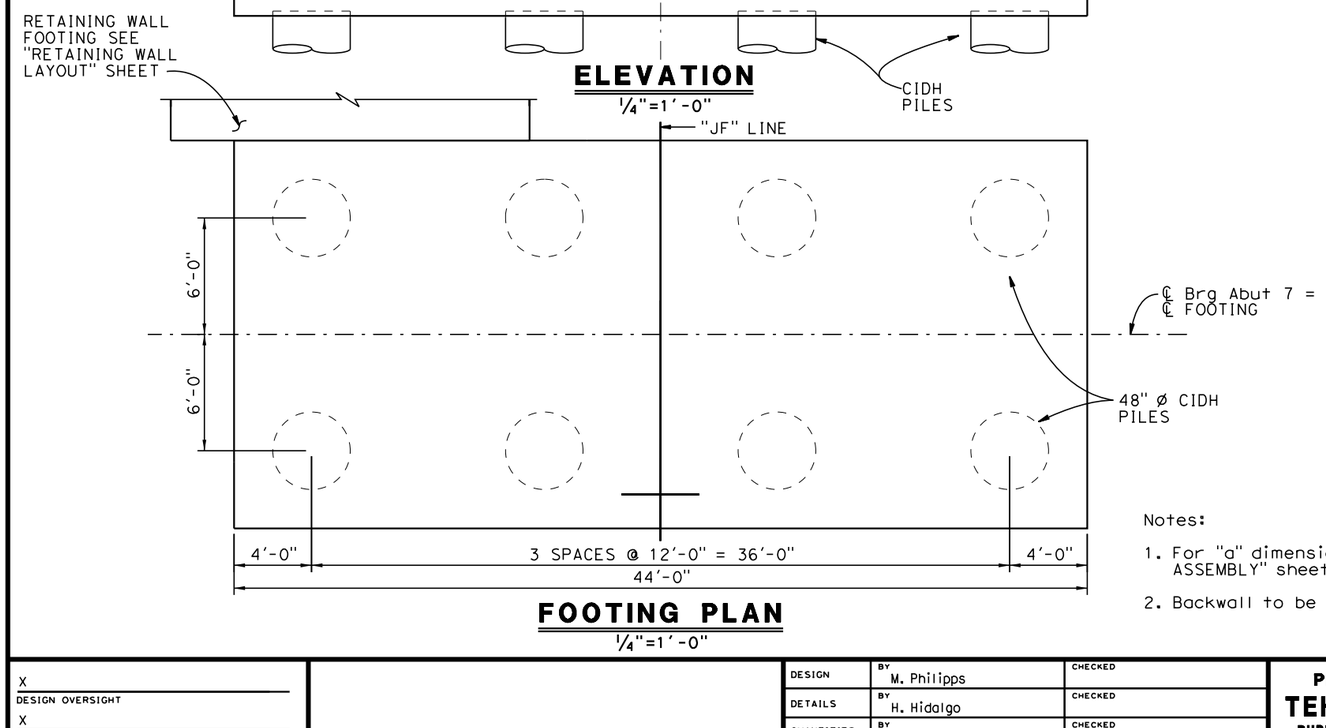

FOOTING PLAN
1/4"=1'-0"

Notes:

1. For "a" dimension, see "STRIP JOINT SEAL ASSEMBLY" sheet.
2. Backwall to be placed after prestressing.

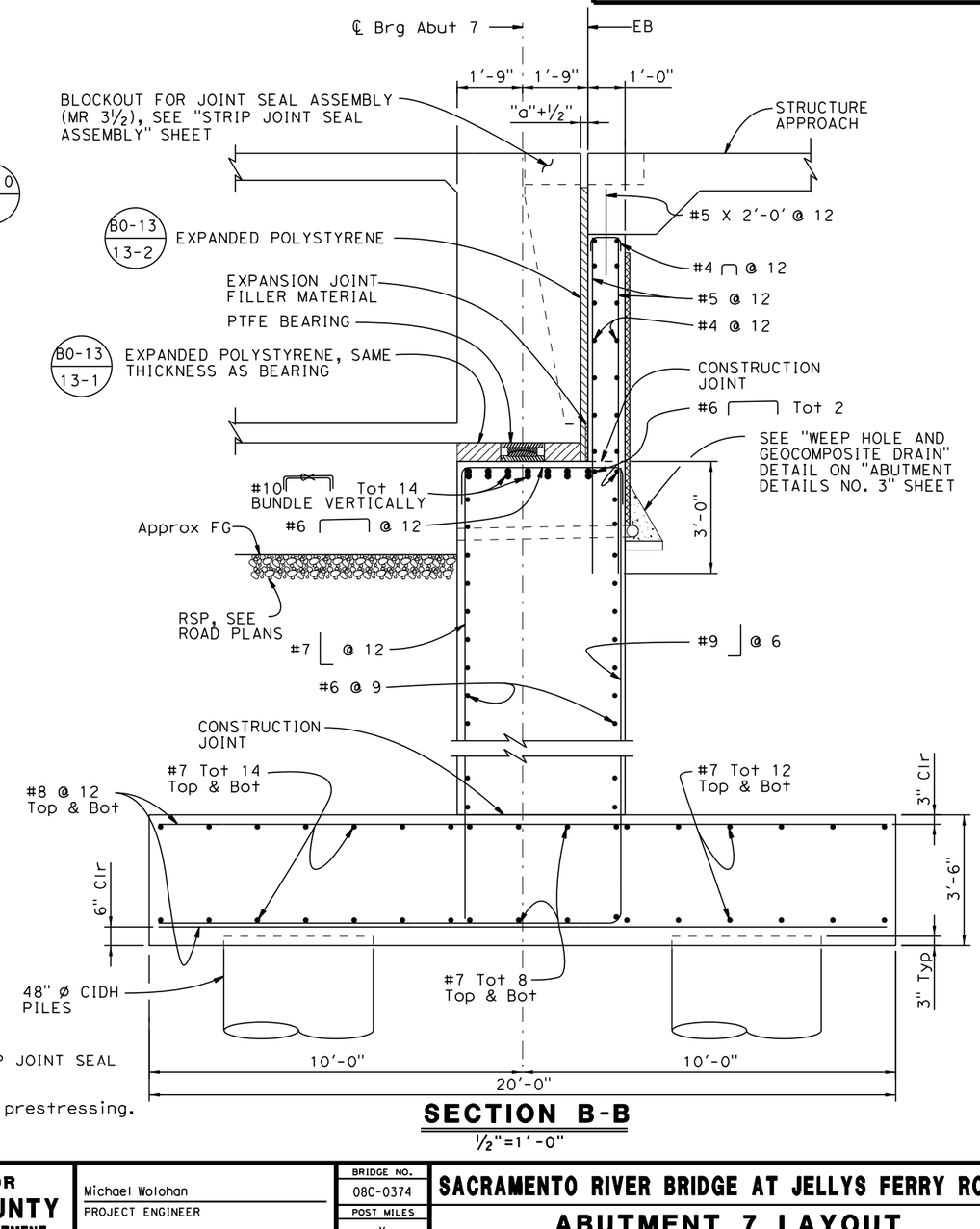

SECTION B-B
1/2"=1'-0"

65% SUBMITTAL, NOT FOR CONSTRUCTION

X DESIGN OVERSIGHT		DESIGN	BY M. Philipps	CHECKED	
X SIGN OFF DATE		DETAILS	BY H. Hidalgo	CHECKED	
		QUANTITIES	BY M. Philipps	CHECKED	

PREPARED FOR
TEHAMA COUNTY
PUBLIC WORKS DEPARTMENT

Michael Wolohan
PROJECT ENGINEER

BRIDGE NO. 08C-0374
POST MILES X

SACRAMENTO RIVER BRIDGE AT JELLYS FERRY ROAD
ABUTMENT 7 LAYOUT

DESIGN DETAIL SHEET (ENGLISH) (REV. 03/14/12)

ORIGINAL SCALE IN INCHES FOR REDUCED PLANS 0 1 2 3

UNIT: X
PROJECT NUMBER & PHASE: X
CONTRACT NO.: X

DISREGARD PRINTS BEARING EARLIER REVISION DATES

REVISION DATES X

SHEET 7 OF 33

DIST	COUNTY	ROUTE	POST MILES TOTAL PROJECT	SHEET No	TOTAL SHEETS
02	TEH	CR		89	138

REGISTERED CIVIL ENGINEER DATE

PLANS APPROVAL DATE

REGISTERED PROFESSIONAL ENGINEER Michael Wolohan No. 67743 Exp. 6/30/15 CIVIL STATE OF CALIFORNIA

T. Y. Lin International or its officers or agents shall not be responsible for the accuracy or completeness of scanned copies of this plan sheet.

T·Y·LIN INTERNATIONAL
1601 Response Road, Suite 260
SACRAMENTO, CA 95815

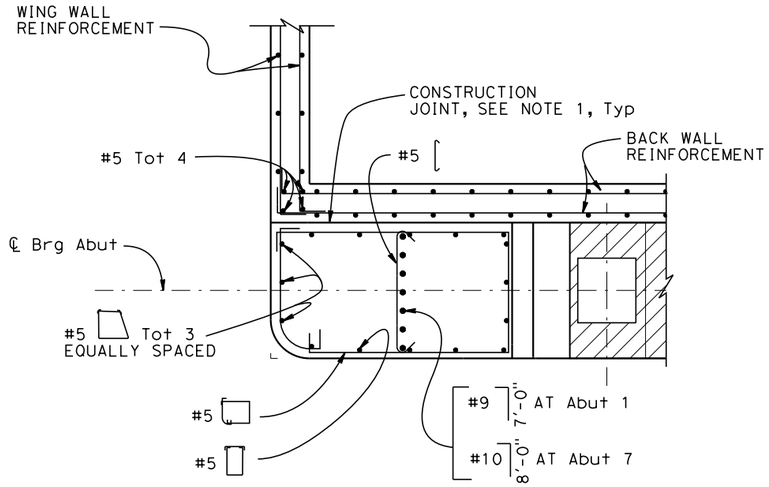

SECTION D-D
½"=1'-0"

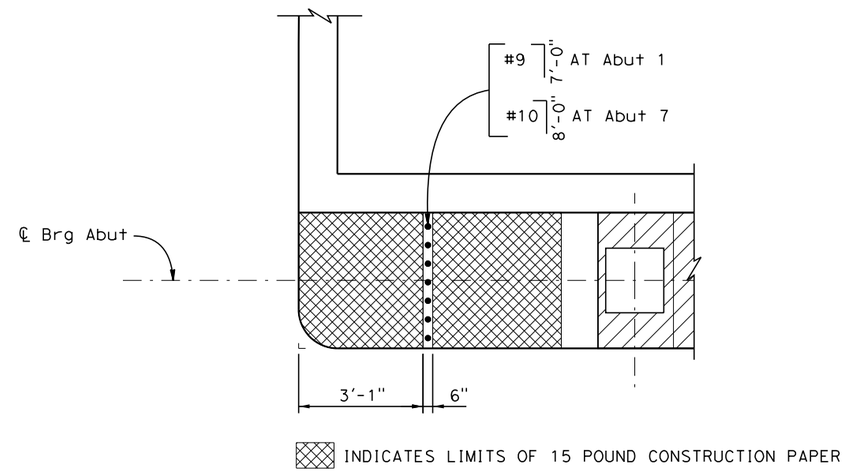

SECTION C-C
½"=1'-0"

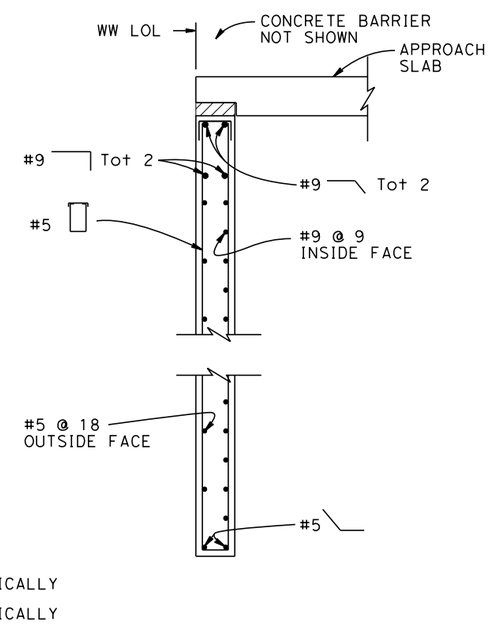

SECTION E-E
½"=1'-0"

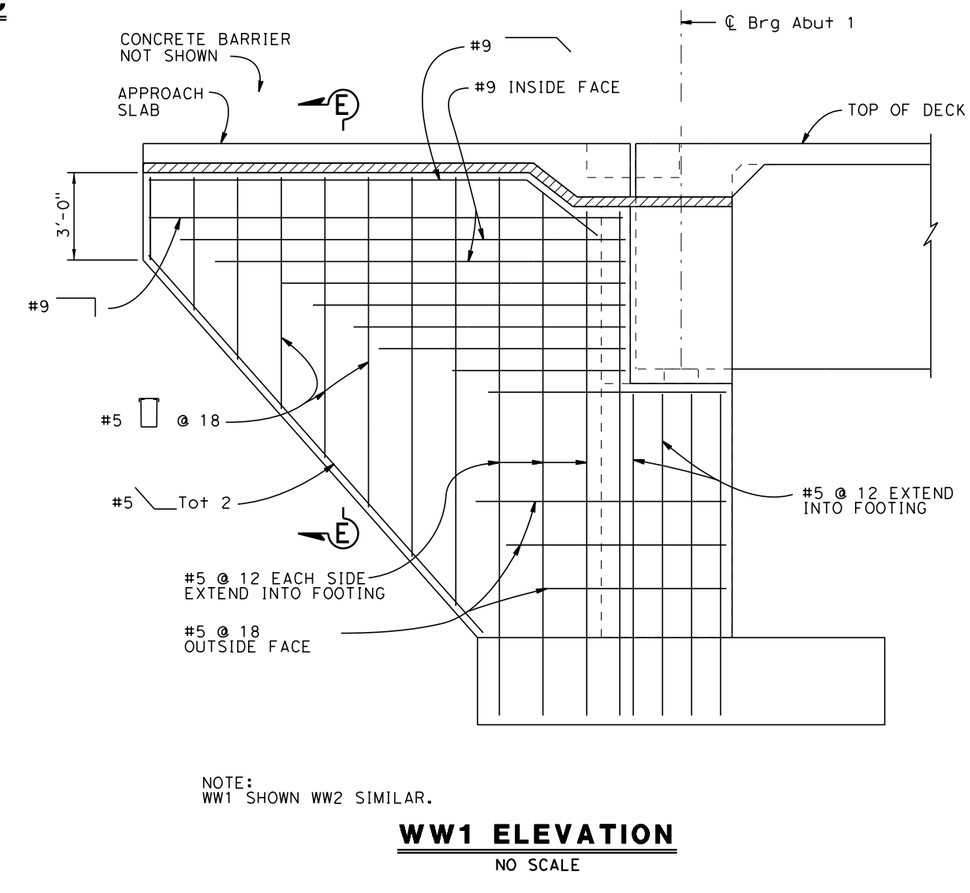

NOTE:
WW1 SHOWN WW2 SIMILAR.

WW1 ELEVATION
NO SCALE

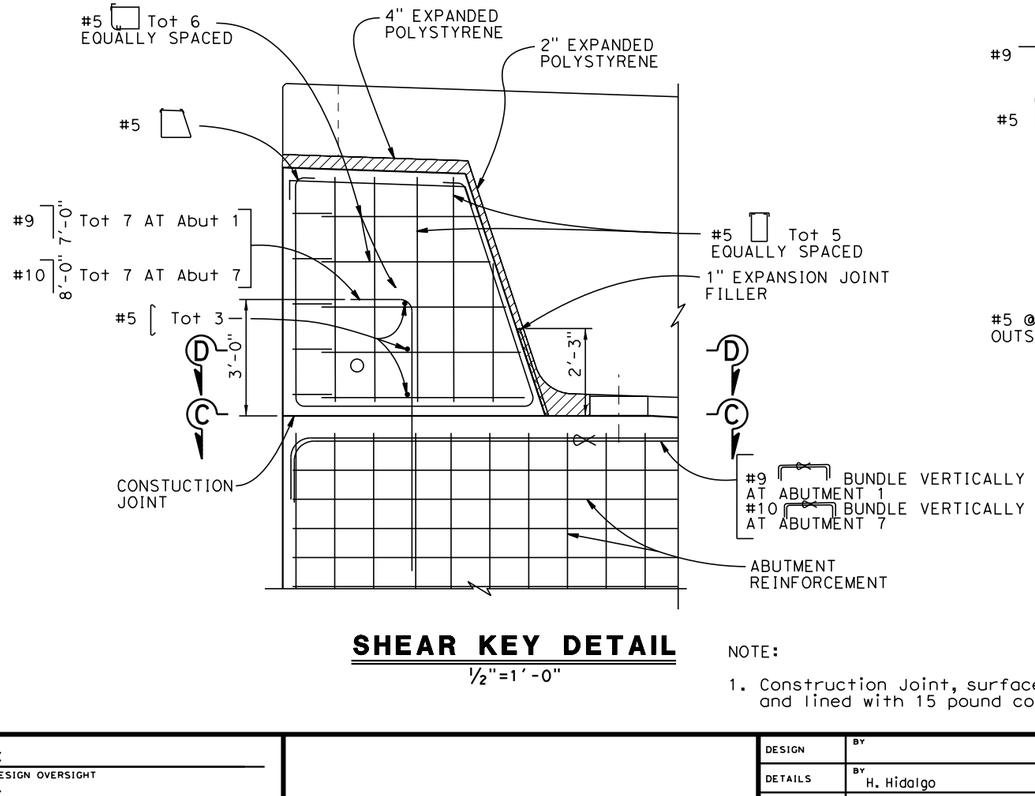

SHEAR KEY DETAIL
½"=1'-0"

NOTE:

1. Construction Joint, surface to be smooth finish and lined with 15 pound construction paper.

65% SUBMITTAL, NOT FOR CONSTRUCTION

X DESIGN OVERSIGHT	DESIGN	BY	CHECKED
X SIGN OFF DATE	DETAILS	BY H. Hidalgo	CHECKED
	QUANTITIES	BY M. Philipps	CHECKED

PREPARED FOR
TEHAMA COUNTY
PUBLIC WORKS DEPARTMENT

Michael Wolohan
PROJECT ENGINEER

BRIDGE NO. 08C-0374
POST MILES X

SACRAMENTO RIVER BRIDGE AT JELLYS FERRY ROAD
ABUTMENT DETAILS NO. 1

DESIGN DETAIL SHEET (ENGLISH) (REV. 03/14/12)

ORIGINAL SCALE IN INCHES FOR REDUCED PLANS 0 1 2 3

UNIT: X
PROJECT NUMBER & PHASE: X
CONTRACT NO.: X

DISREGARD PRINTS BEARING EARLIER REVISION DATES

REVISION DATES X

SHEET 8 OF 33

FILE => t:\sacramento\legacy\pri_file\710054 - jellys ferry bridge\500_engineering\520_structures\521_cadd\054JF_dgn\054JF-f-b01dt01.dgn

USERNAME => phidalgo DATE PLOTTED => 3/20/2015 TIME PLOTTED => 1:50:07 PM

DIST	COUNTY	ROUTE	POST MILES TOTAL PROJECT	SHEET No	TOTAL SHEETS
02	TEH	CR		90	138

REGISTERED CIVIL ENGINEER DATE

PLANS APPROVAL DATE

REGISTERED PROFESSIONAL ENGINEER Michael Wolohan No. 67743 Exp. 6/30/15 CIVIL STATE OF CALIFORNIA

T. Y. Lin International or its officers or agents shall not be responsible for the accuracy or completeness of scanned copies of this plan sheet.

T·Y·LIN INTERNATIONAL
1601 Response Road, Suite 260
SACRAMENTO, CA 95815

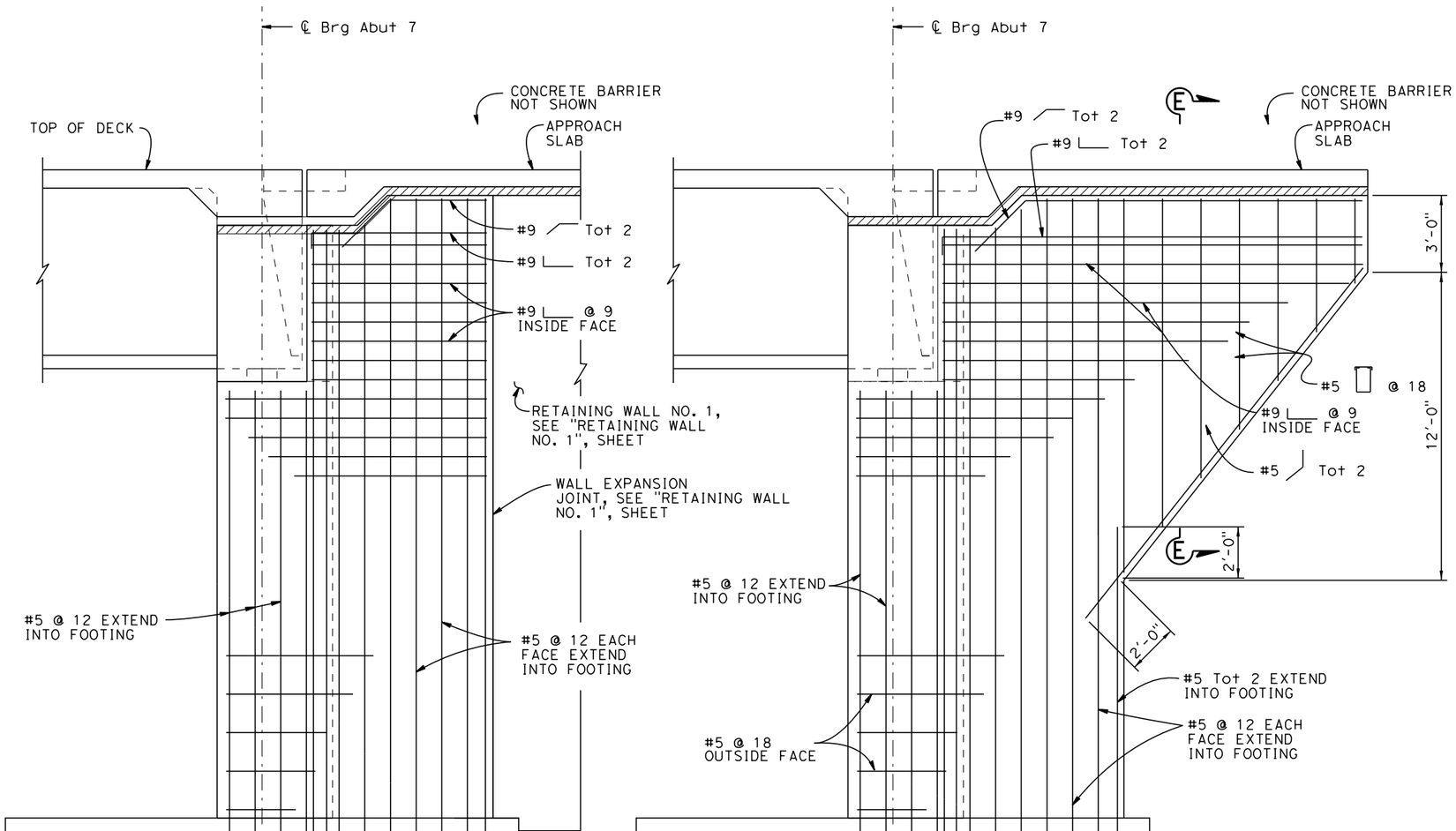

WW3 ELEVATION
NO SCALE

WW4 ELEVATION
NO SCALE

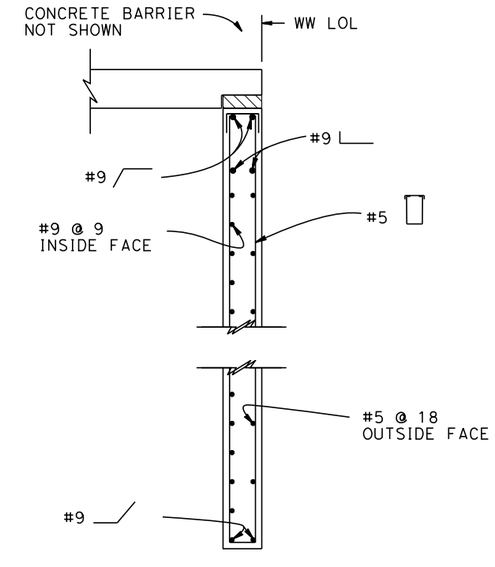

SECTION E-E
½"=1'-0"

65% SUBMITTAL, NOT FOR CONSTRUCTION

X DESIGN OVERSIGHT		DESIGN	BY	CHECKED	
X SIGN OFF DATE		DETAILS	BY H. Hidalgo	CHECKED	
		QUANTITIES	BY M. Philipps	CHECKED	

PREPARED FOR
TEHAMA COUNTY
PUBLIC WORKS DEPARTMENT

Michael Wolohan
PROJECT ENGINEER

BRIDGE NO. 08C-0374
POST MILES X

SACRAMENTO RIVER BRIDGE AT JELLYS FERRY ROAD
ABUTMENT DETAILS NO. 2

DESIGN DETAIL SHEET (ENGLISH) (REV. 03/14/12)

ORIGINAL SCALE IN INCHES FOR REDUCED PLANS 0 1 2 3

UNIT: X
PROJECT NUMBER & PHASE: X
CONTRACT NO.: X

DISREGARD PRINTS BEARING EARLIER REVISION DATES

REVISION DATES X

SHEET 9 OF 33

USERNAME => phidalgo DATE PLOTTED => 3/20/2015 TIME PLOTTED => 1:50:09 PM

FILE => t:\sacramento\legacy\pri_file\710054 - jellys ferry bridge\500_engineering\520_structures\521_cadd\054JF_dgn\054JF-f-b01dt02.dgn

DIST	COUNTY	ROUTE	POST MILES TOTAL PROJECT	SHEET No	TOTAL SHEETS
02	TEH	CR		91	138

REGISTERED CIVIL ENGINEER DATE

PLANS APPROVAL DATE

REGISTERED PROFESSIONAL ENGINEER Michael Wolohan No. 67743 Exp. 6/30/15 CIVIL STATE OF CALIFORNIA

T. Y. Lin International or its officers or agents shall not be responsible for the accuracy or completeness of scanned copies of this plan sheet.

T·Y·LIN INTERNATIONAL
1601 Response Road, Suite 260
SACRAMENTO, CA 95815

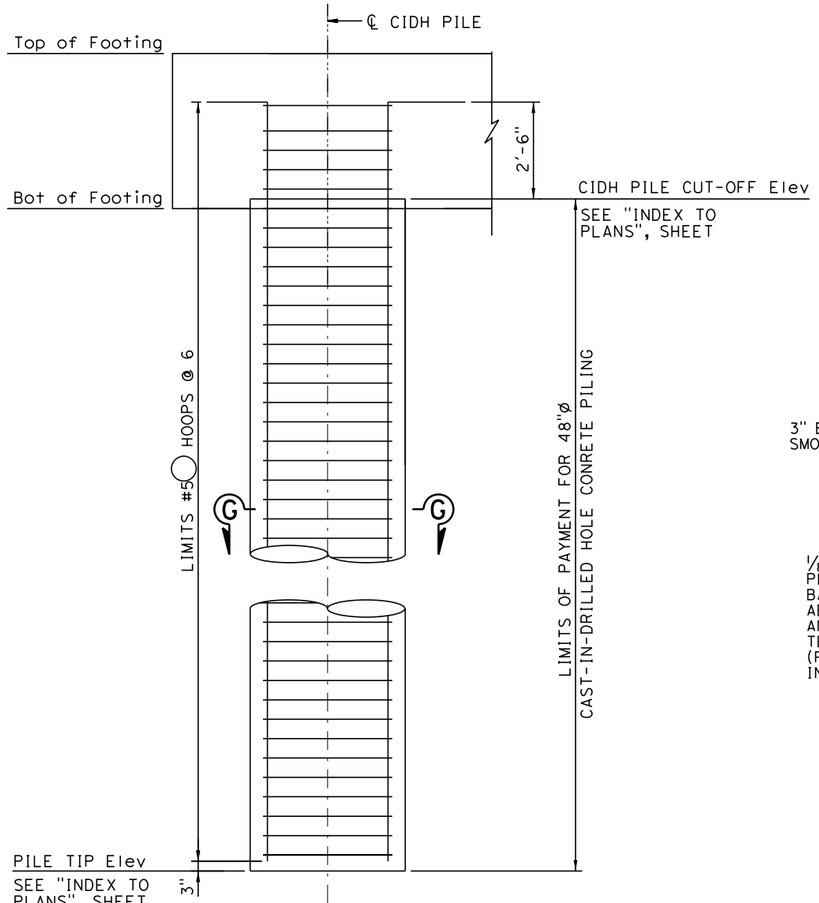

48" CIDH PILE

½"=1'-0"

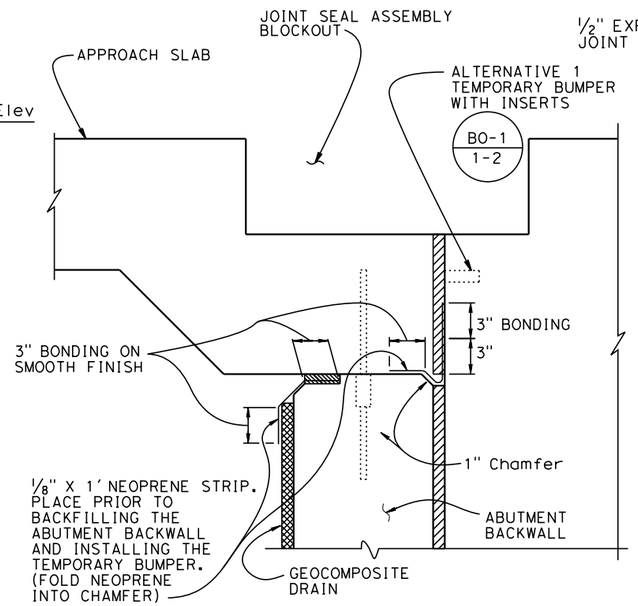

JOINT PROTECTION DETAIL

No Scale

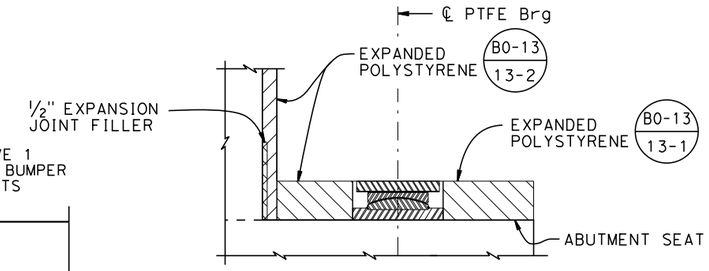

BACK WALL BASE DETAIL

No Scale

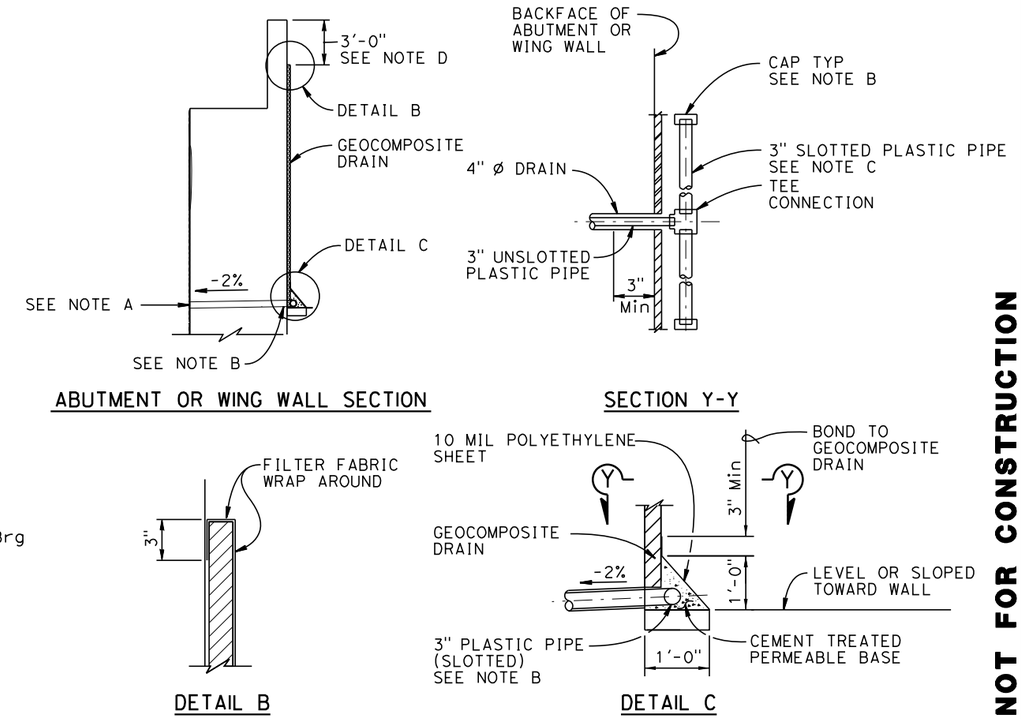

WEEP HOLE AND GEOCOMPOSITE DRAIN

No Scale

Notes:

A. 4" Ø drains at intermediate sag points and at 25'-0" Max. center to center. For walls adjacent to sidewalks or curbs, provide 4" Ø plastic pipe under sidewalk to discharge through curb face. Exposed wall drains shall be located 0'-3"± above finished grade.

B. Geocomposite drain, cement treated permeable base, and 3" Ø slotted plastic pipe continuous behind wing wall or abutment. Cap ends of pipe. Provide "Tee" connection at each 4" Ø casing.

C. Connect the low end of plastic pipe to the main outlet pipe as applicable.

D. 3'-0" at top of wing walls only. For top of abutment backwall, see "JOINT PROTECTION DETAIL".

SECTION G-G

¾"=1'-0"

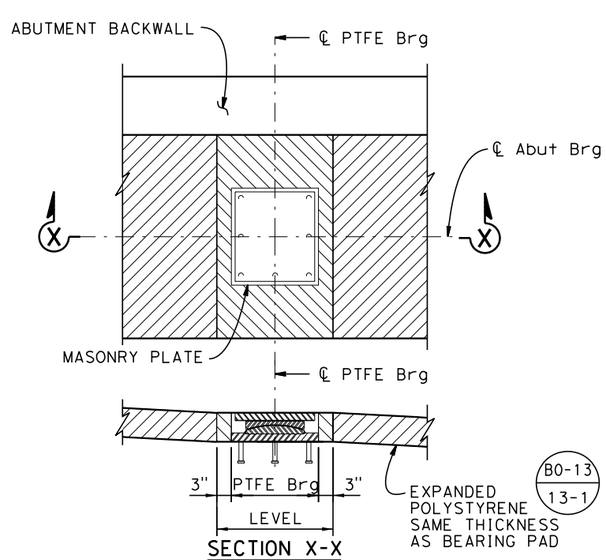

PTFE BEARING SEAT DETAIL

No Scale

65% SUBMITTAL, NOT FOR CONSTRUCTION

X DESIGN OVERSIGHT	DESIGN	BY	CHECKED
X SIGN OFF DATE	DETAILS	BY H. Hidalgo	CHECKED
	QUANTITIES	BY M. Philipps	CHECKED

PREPARED FOR **TEHAMA COUNTY PUBLIC WORKS DEPARTMENT**

Michael Wolohan
PROJECT ENGINEER

BRIDGE NO. 08C-0374
POST MILES X

SACRAMENTO RIVER BRIDGE AT JELLYS FERRY ROAD

ABUTMENT DETAILS NO. 3

DESIGN DETAIL SHEET (ENGLISH) (REV. 03/14/12)

ORIGINAL SCALE IN INCHES FOR REDUCED PLANS 0 1 2 3

UNIT: X
PROJECT NUMBER & PHASE: X
CONTRACT NO.: X

DISREGARD PRINTS BEARING EARLIER REVISION DATES

REVISION DATES X

SHEET 10 OF 33

USERNAME => hhidalgo DATE PLOTTED => 3/20/2015 TIME PLOTTED => 11:50:11 PM

FILE => t:\sacramento\legacy\prj_file\710054 - jellys ferry bridge\500_engineering\520_structures\521_cadd\054JF_dgn\054JF-f-b01dt03.dgn

DIST	COUNTY	ROUTE	POST MILES TOTAL PROJECT	SHEET No	TOTAL SHEETS
02	TEH	CR		92	138

REGISTERED CIVIL ENGINEER DATE

PLANS APPROVAL DATE

REGISTERED PROFESSIONAL ENGINEER Michael Wolohan No. 67743 Exp. 6/30/15 CIVIL STATE OF CALIFORNIA

T. Y. Lin International or its officers or agents shall not be responsible for the accuracy or completeness of scanned copies of this plan sheet.

T·Y·LIN INTERNATIONAL
1601 Response Road, Suite 260
SACRAMENTO, CA 95815

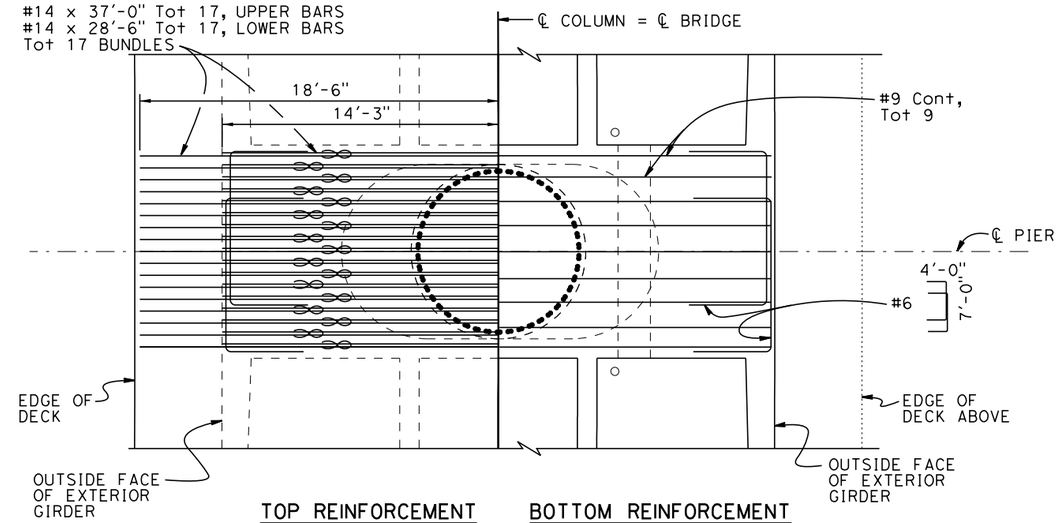

TOP REINFORCEMENT BOTTOM REINFORCEMENT

LEGEND

* Bar spacing may be adjusted to clear P/S ducts.

** Clearance to main cap reinforcement.

Indicates Bundled Reinforcement

PLAN

1/4"=1'-0"

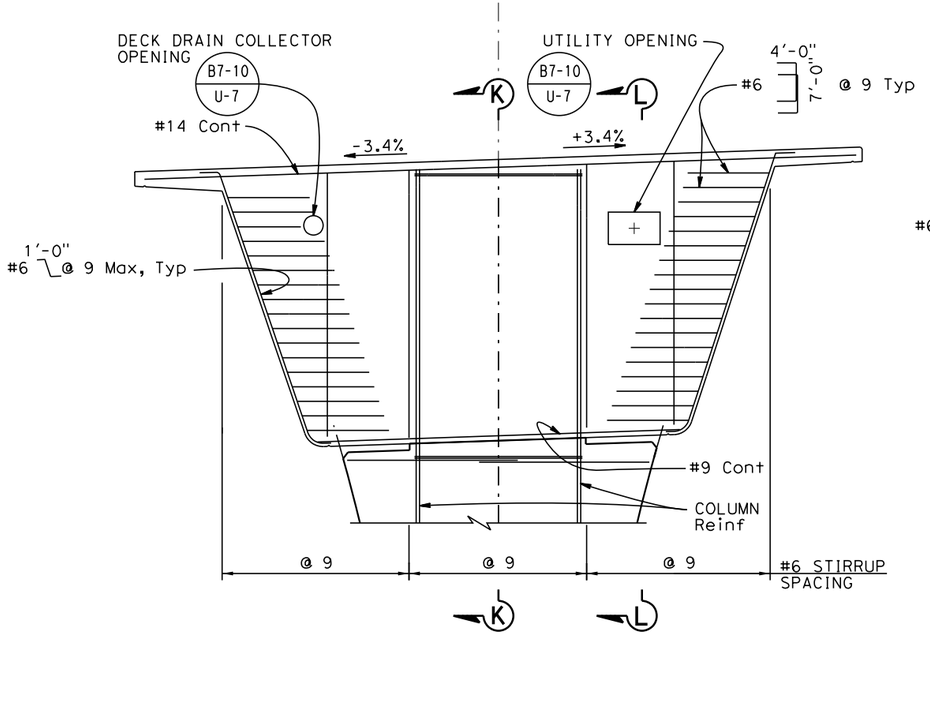

ELEVATION

1/4"=1'-0"

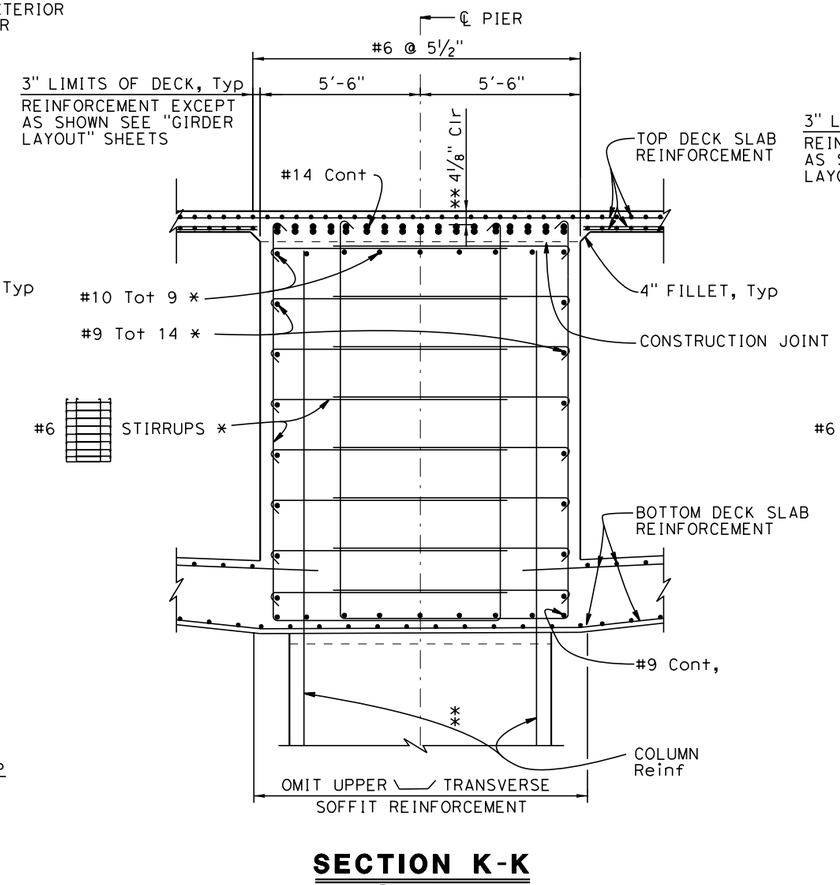

SECTION K-K

3/8"=1'-0"

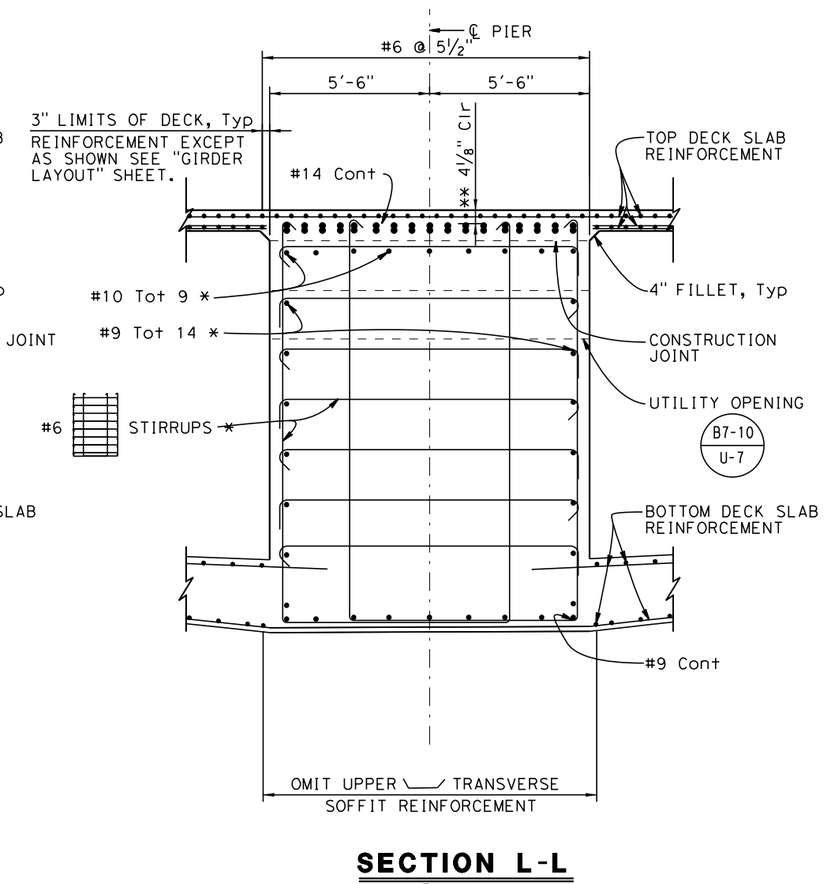

SECTION L-L

3/8"=1'-0"

Note:

For Column flare details see "PIER DETAILS" sheet.

65% SUBMITTAL, NOT FOR CONSTRUCTION

USERNAME => hhidalgo DATE PLOTTED => 3/20/2015 TIME PLOTTED => 1:50:14 PM

X DESIGN OVERSIGHT		DESIGN	BY M. Wolohan	CHECKED	
X SIGN OFF DATE		DETAILS	BY H. Hidalgo	CHECKED	
		QUANTITIES	BY M. Philipps	CHECKED	

PREPARED FOR **TEHAMA COUNTY PUBLIC WORKS DEPARTMENT**

Michael Wolohan
PROJECT ENGINEER

BRIDGE NO. 08C-0374
POST MILES X

SACRAMENTO RIVER BRIDGE AT JELLYS FERRY ROAD

PIER 2 & 3 DETAILS NO. 1

DESIGN DETAIL SHEET (ENGLISH) (REV. 03/14/12)

ORIGINAL SCALE IN INCHES FOR REDUCED PLANS 0 1 2 3

UNIT: X
PROJECT NUMBER & PHASE: X
CONTRACT NO.: X

DISREGARD PRINTS BEARING EARLIER REVISION DATES

REVISION DATES X

SHEET 11 OF 33

FILE => t:\sacramento\legacy\pri_file\710054 - jellys ferry bridge\500_engineering\520_structures\521_cadd\054JF_dgn\054JF-i-p01_to01.dgn

DIST	COUNTY	ROUTE	POST MILES TOTAL PROJECT	SHEET No	TOTAL SHEETS
02	TEH	CR		93	138

REGISTERED CIVIL ENGINEER DATE

PLANS APPROVAL DATE

REGISTERED PROFESSIONAL ENGINEER Michael Wolohan No. 67743 Exp. 6/30/15 CIVIL STATE OF CALIFORNIA

T. Y. Lin International or its officers or agents shall not be responsible for the accuracy or completeness of scanned copies of this plan sheet.

T·Y·LIN INTERNATIONAL
1601 Response Road, Suite 260
SACRAMENTO, CA 95815

NOTES:

1. For Column flare details see "PIER DETAILS" sheet.
2. No splices allowed in main Column reinforcement.
3. No splices allowed in main CIDH Pile reinforcement.
4. Splices in main Column and CIDH Pile reinforcement shall utilize "Ultimate Splices".
5. Pile and Column hoops shall utilize "Ultimate" Butt Splices.

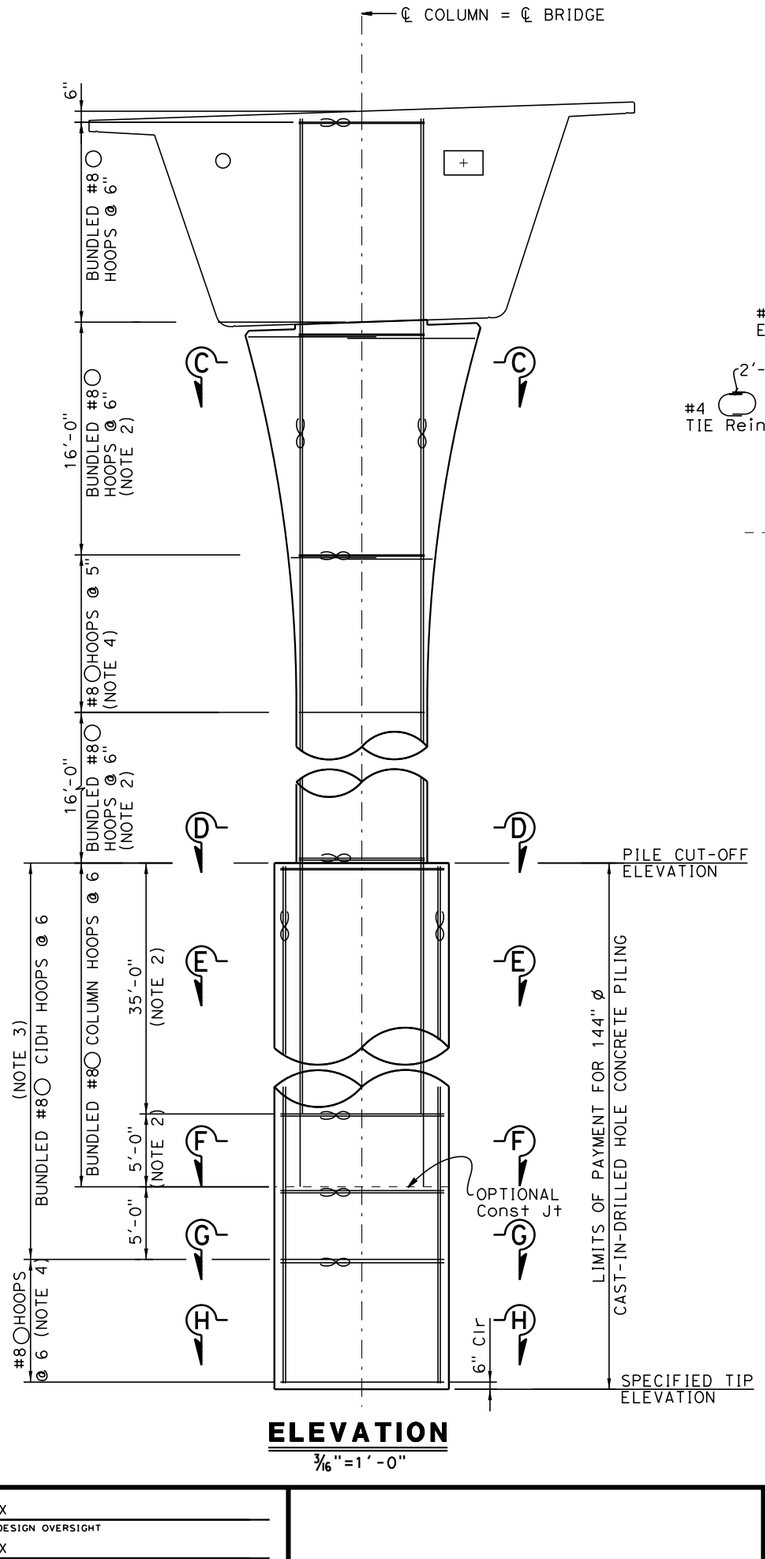

ELEVATION
3/16"=1'-0"

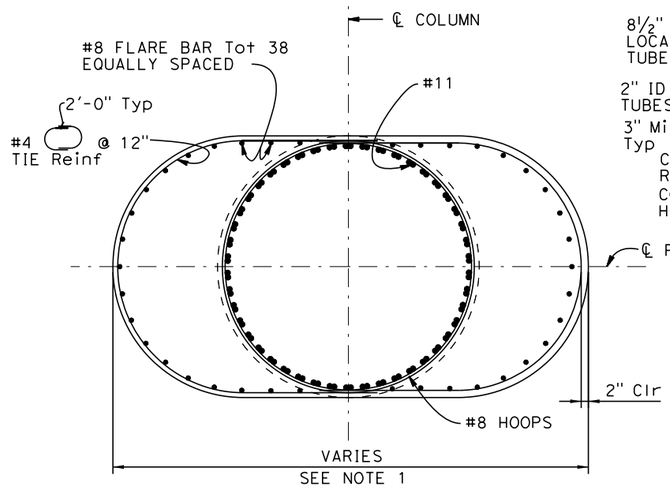

SECTION C-C
3/8"=1'-0"

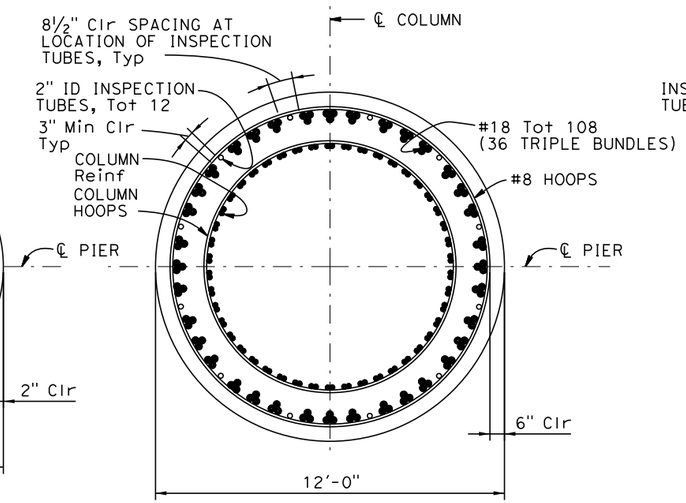

SECTION E-E
3/8"=1'-0"

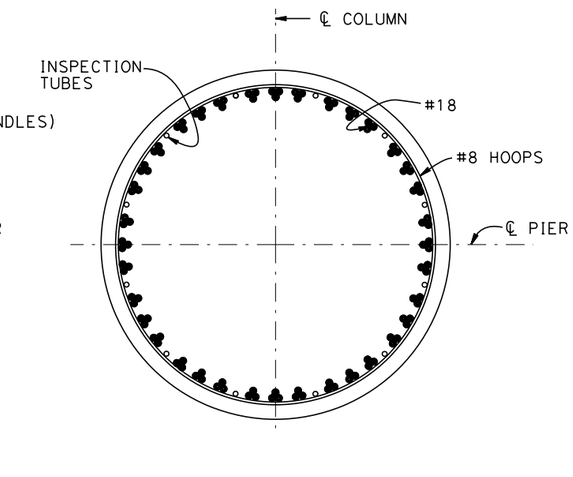

SECTION G-G
3/8"=1'-0"

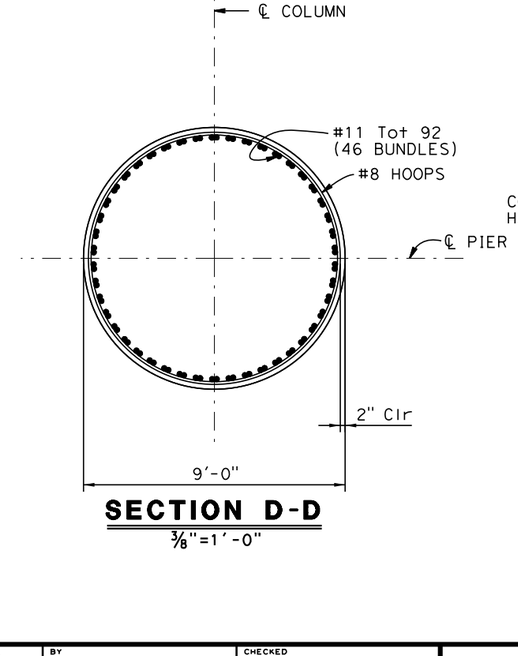

SECTION D-D
3/8"=1'-0"

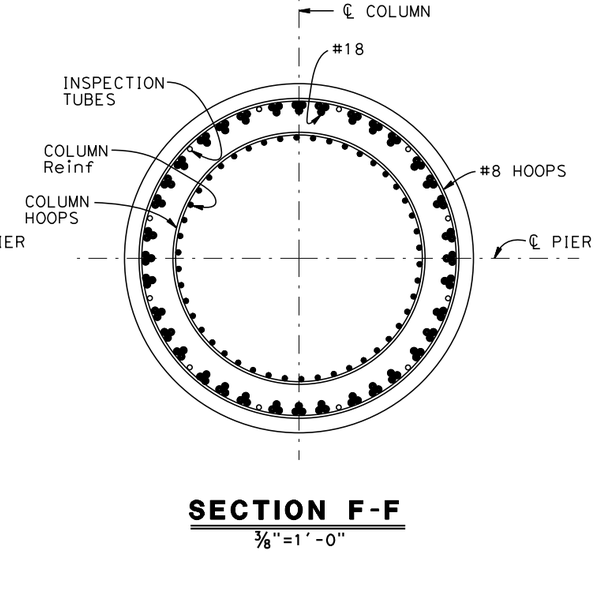

SECTION F-F
3/8"=1'-0"

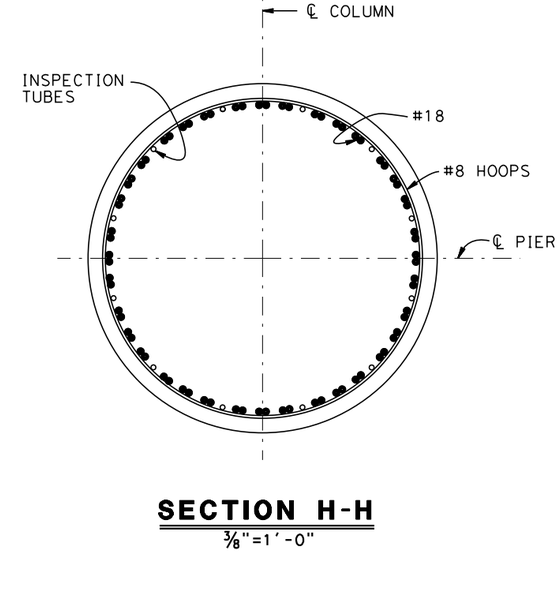

SECTION H-H
3/8"=1'-0"

65% SUBMITTAL, NOT FOR CONSTRUCTION

USERNAME => hhidalgo DATE PLOTTED => 3/20/2015 TIME PLOTTED => 1:50:15 PM

X
DESIGN OVERSIGHT
X
SIGN OFF DATE

	BY	CHECKED
DESIGN	M. Wolohan	
DETAILS	H. Hidalgo	
QUANTITIES	M. Philipps	

PREPARED FOR
TEHAMA COUNTY
PUBLIC WORKS DEPARTMENT

Michael Wolohan
PROJECT ENGINEER

BRIDGE NO. 08C-0374
POST MILES X

SACRAMENTO RIVER BRIDGE AT JELLYS FERRY ROAD
PIER 2 & 3 DETAILS

DESIGN DETAIL SHEET (ENGLISH) (REV. 03/14/12)

ORIGINAL SCALE IN INCHES FOR REDUCED PLANS 0 1 2 3

UNIT: X
PROJECT NUMBER & PHASE: X
CONTRACT NO.: X

DISREGARD PRINTS BEARING EARLIER REVISION DATES

REVISION DATES X

SHEET 12 OF 33

FILE => t:\sacramento\legacy\prj_file\710054 - jellys ferry bridge\500_engineering\520_structures\521_cadd\054JF_dgn\054JF-i-p01_to02.dgn

DIST	COUNTY	ROUTE	POST MILES TOTAL PROJECT	SHEET No	TOTAL SHEETS
02	TEH	CR		94	138

REGISTERED CIVIL ENGINEER DATE

PLANS APPROVAL DATE

REGISTERED PROFESSIONAL ENGINEER Michael Wolohan No. 67743 Exp. 6/30/15 CIVIL STATE OF CALIFORNIA

T. Y. Lin International or its officers or agents shall not be responsible for the accuracy or completeness of scanned copies of this plan sheet.

T·Y·LIN INTERNATIONAL
1601 Response Road, Suite 260
SACRAMENTO, CA 95815

LEGEND

* Bar spacing may be adjusted to clear P/S ducts.

** Clearance to main cap reinforcement.

Indicates Bundled Reinforcement

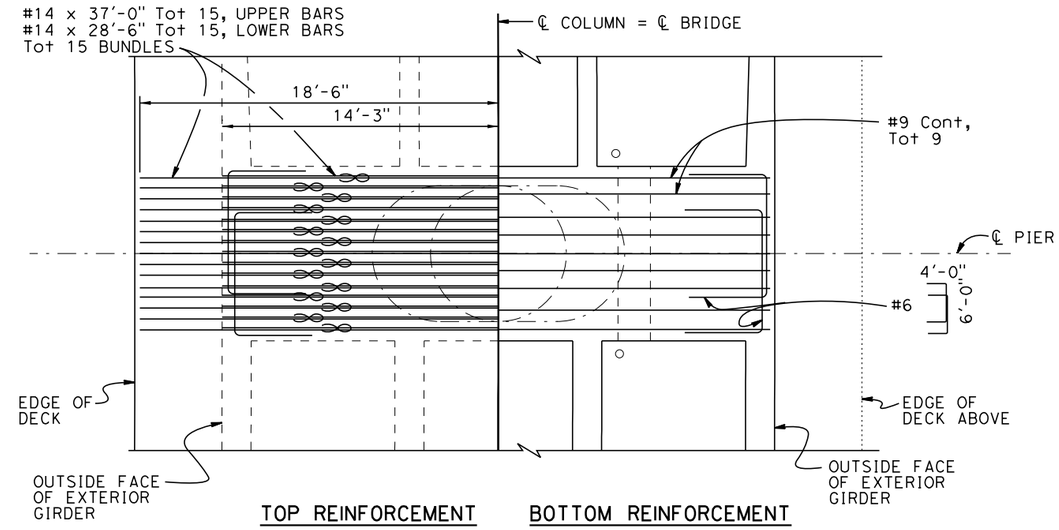

PLAN
1/4"=1'-0"

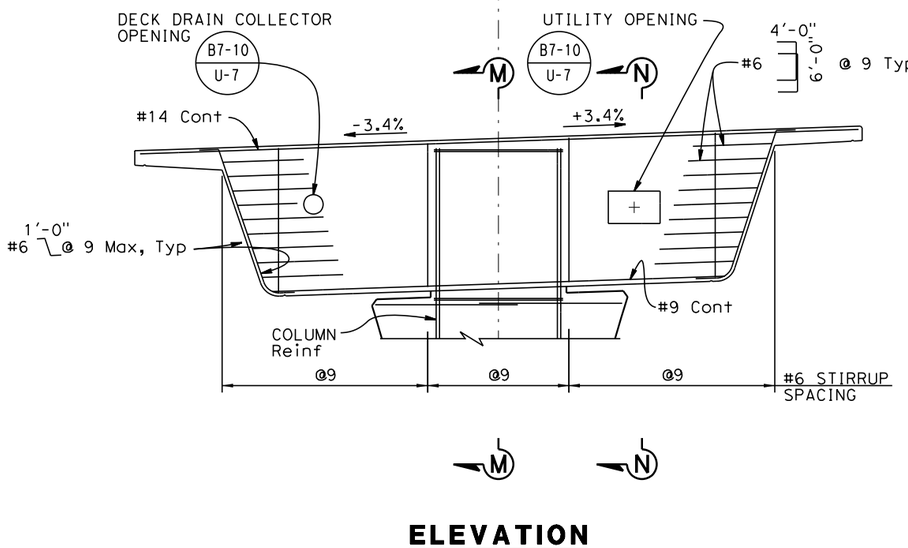

ELEVATION
1/4"=1'-0"

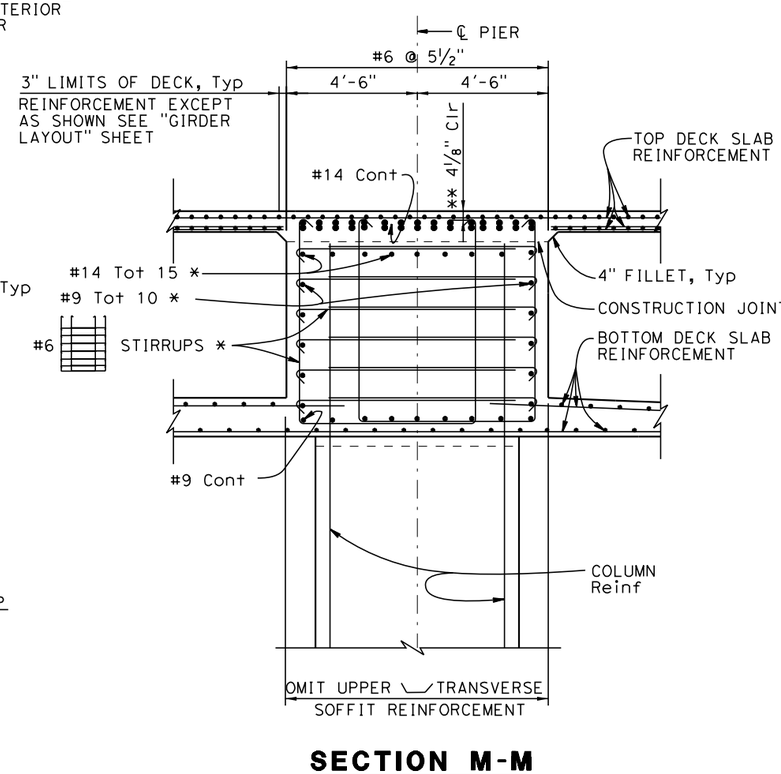

SECTION M-M
3/8"=1'-0"

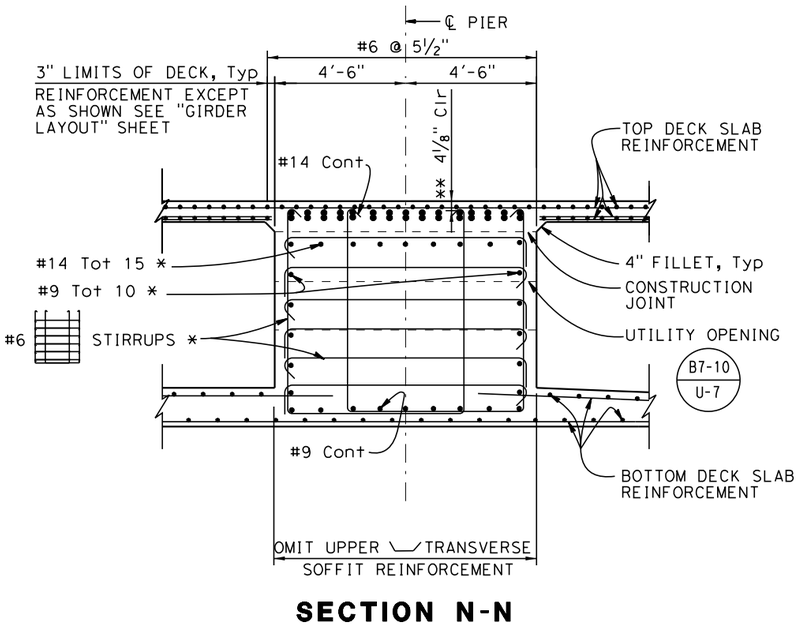

SECTION N-N
3/8"=1'-0"

Note:

For Column flare details see "PIER DETAILS" sheet.

65% SUBMITTAL, NOT FOR CONSTRUCTION

USERNAME => hhidalgo DATE PLOTTED => 3/20/2015 TIME PLOTTED => 1:50:18 PM

X DESIGN OVERSIGHT	DESIGN	BY M. Wolohan	CHECKED	PREPARED FOR TEHAMA COUNTY PUBLIC WORKS DEPARTMENT	Michael Wolohan PROJECT ENGINEER
X SIGN OFF DATE	DETAILS	BY H. Hidalgo	CHECKED		BRIDGE NO. 08C-0374
	QUANTITIES	BY M. Philipps	CHECKED		POST MILES X

SACRAMENTO RIVER BRIDGE AT JELLYS FERRY ROAD

PIER 4, 5 & 6 DETAILS NO. 1

DESIGN DETAIL SHEET (ENGLISH) (REV. 03/14/12)

ORIGINAL SCALE IN INCHES FOR REDUCED PLANS 0 1 2 3

UNIT: X
PROJECT NUMBER & PHASE: X CONTRACT NO.: X

DISREGARD PRINTS BEARING EARLIER REVISION DATES

REVISION DATES X

SHEET 13 OF 33

FILE => t:\sacramento\legacy\pri_file\710054 - jellys ferry bridge\500_engineering\520_structures\521_cadd\054JF_dgn\054JF-i-p02_lo01.dgn

DIST	COUNTY	ROUTE	POST MILES TOTAL PROJECT	SHEET No	TOTAL SHEETS
02	TEH	CR		95	138

REGISTERED CIVIL ENGINEER DATE

PLANS APPROVAL DATE

REGISTERED PROFESSIONAL ENGINEER Michael Wolohan No. 67743 Exp. 6/30/15 CIVIL STATE OF CALIFORNIA

T. Y. Lin International or its officers or agents shall not be responsible for the accuracy or completeness of scanned copies of this plan sheet.

T·Y·LIN INTERNATIONAL
1601 Response Road, Suite 260
SACRAMENTO, CA 95815

NOTES:

1. For Column flare details see "PIER FLARE DETAILS" sheet.
2. No splices allowed in main Column reinforcement.
3. No splices allowed in main CIDH Pile reinforcement.
4. Splices in main Column and CIDH Pile reinforcement shall utilize "Ultimate Splices".
5. Pile and Column hoops shall utilize "Ultimate" Butt Splices.

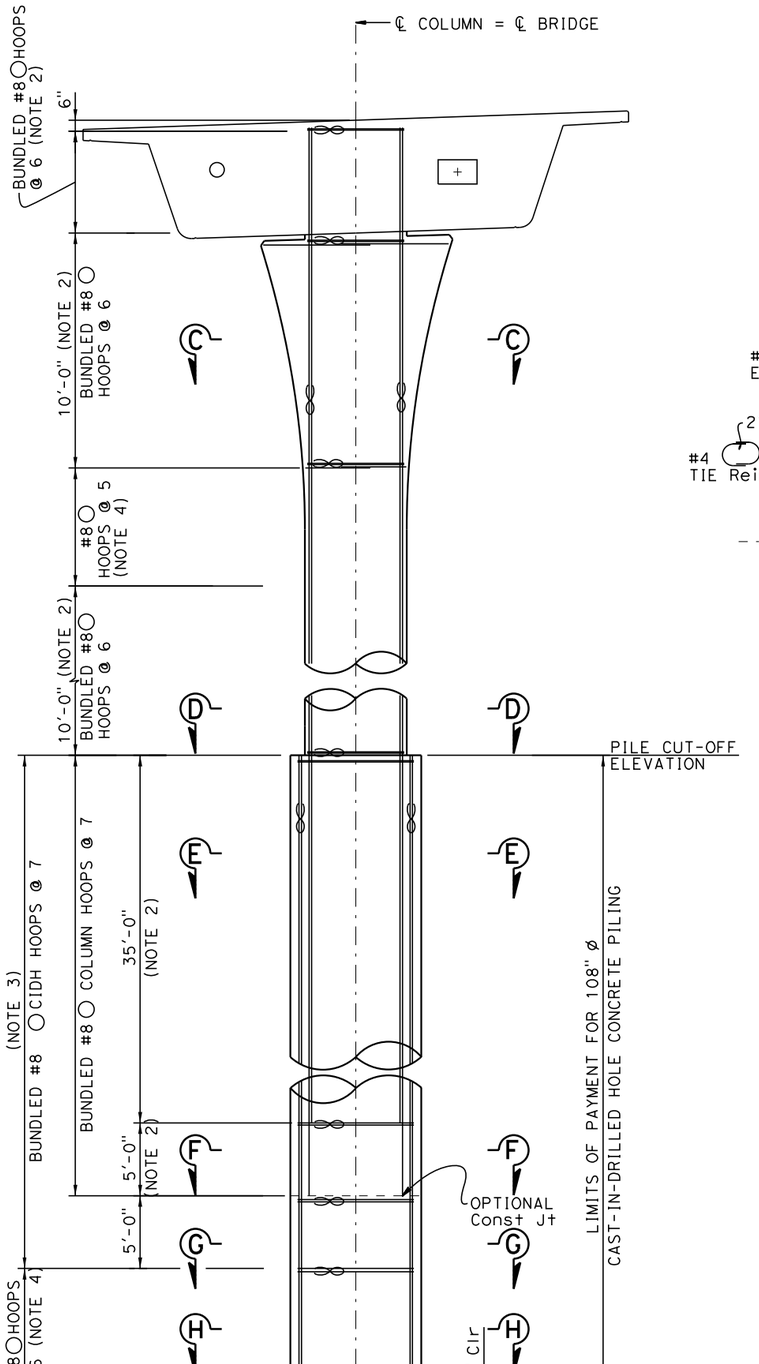

ELEVATION
3/16"=1'-0"

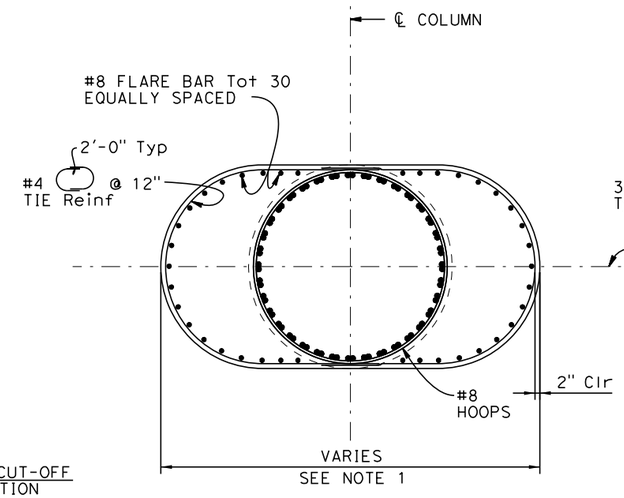

SECTION C-C
3/8"=1'-0"

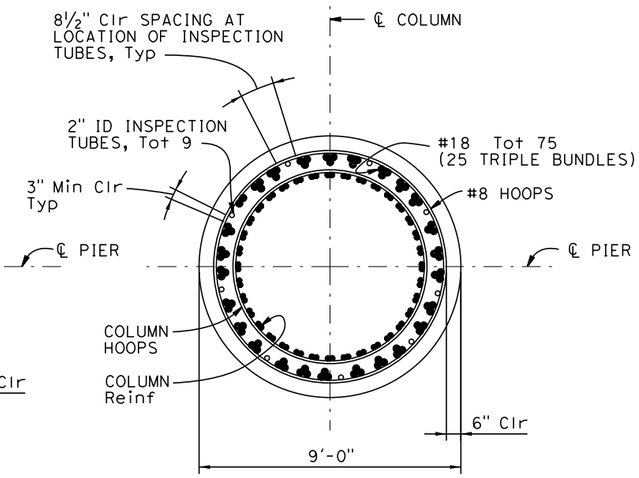

SECTION E-E
3/8"=1'-0"

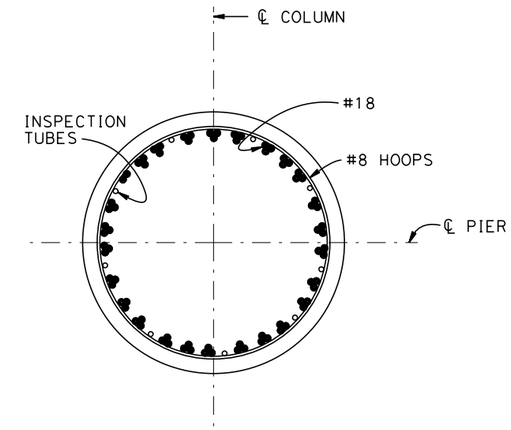

SECTION G-G
3/8"=1'-0"

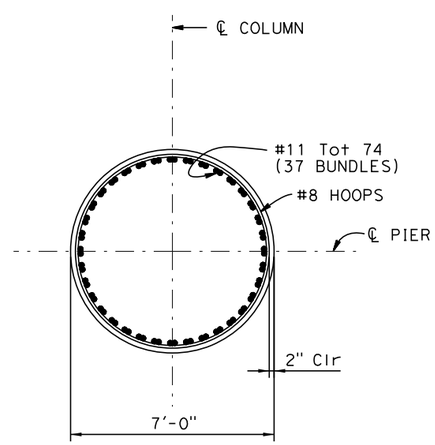

SECTION D-D
3/8"=1'-0"

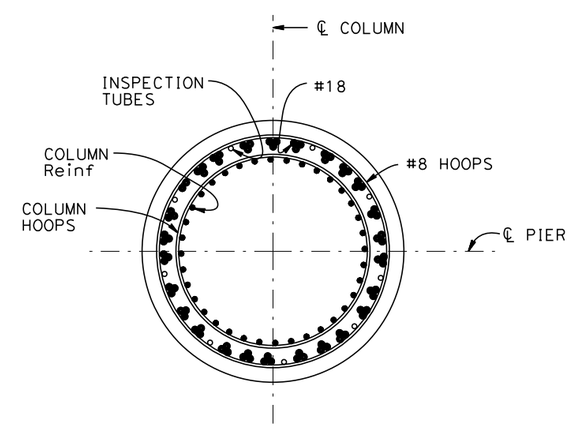

SECTION F-F
3/8"=1'-0"

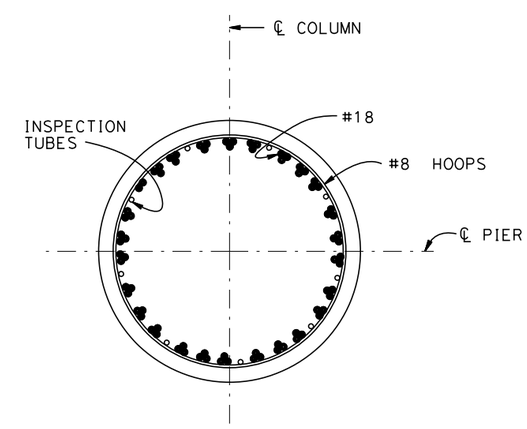

SECTION H-H
3/8"=1'-0"

65% SUBMITTAL, NOT FOR CONSTRUCTION

X DESIGN OVERSIGHT		DESIGN	BY M. Wolohan	CHECKED	
X SIGN OFF DATE		DETAILS	BY H. Hidalgo	CHECKED	
		QUANTITIES	BY M. Philipps	CHECKED	

PREPARED FOR
TEHAMA COUNTY
PUBLIC WORKS DEPARTMENT

Michael Wolohan
PROJECT ENGINEER

BRIDGE NO. 08C-0374
POST MILES X

SACRAMENTO RIVER BRIDGE AT JELLYS FERRY ROAD
PIER 4, 5 & 6 DETAILS

DESIGN DETAIL SHEET (ENGLISH) (REV. 03/14/12)

ORIGINAL SCALE IN INCHES FOR REDUCED PLANS 0 1 2 3

UNIT: X
PROJECT NUMBER & PHASE: X
CONTRACT NO.: X

DISREGARD PRINTS BEARING EARLIER REVISION DATES

REVISION DATES X

SHEET 14 OF 33

FILE => t:\sacramento\legacy\pri_file\710054 - jellys ferry bridge\500_engineering\520_structures\521_cadd\054JF_dgn\054JF-i-p02_lo02.dgn

USERNAME => hhidalgo DATE PLOTTED => 3/20/2015 TIME PLOTTED => 1:50:20 PM

DIST	COUNTY	ROUTE	POST MILES TOTAL PROJECT	SHEET No	TOTAL SHEETS
02	TEH	CR		96	138

REGISTERED CIVIL ENGINEER DATE

PLANS APPROVAL DATE

REGISTERED PROFESSIONAL ENGINEER Michael Wolohan No. 67743 Exp. 6/30/15 CIVIL STATE OF CALIFORNIA

T. Y. Lin International or its officers or agents shall not be responsible for the accuracy or completeness of scanned copies of this plan sheet.

T·Y·LIN INTERNATIONAL
1601 Response Road, Suite 260
SACRAMENTO, CA 95815

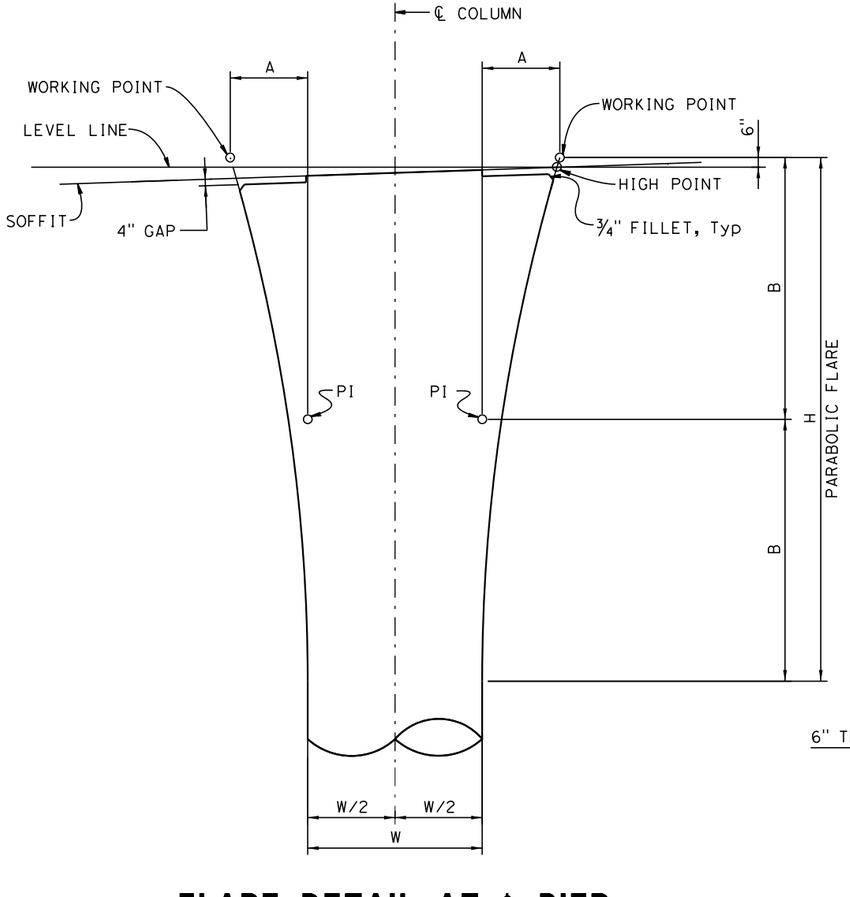

FLARE DETAIL AT ℄ PIER

NO SCALE

PARABOLIC FLARE DIMENSIONS			
W	A	B	H
7'-0"	3'-6"	10'-6"	21'-0"
9'-0"	4'-0"	13'-6"	27'-0"

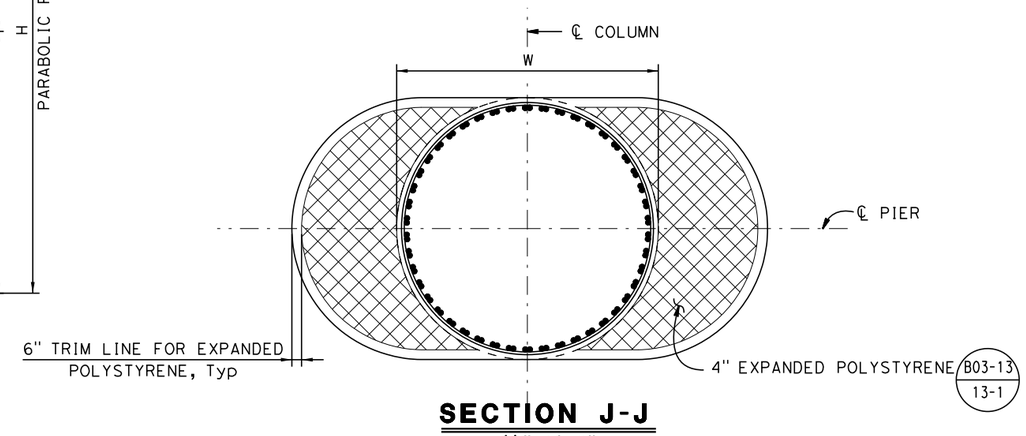

SECTION J-J

½"=1'-0"

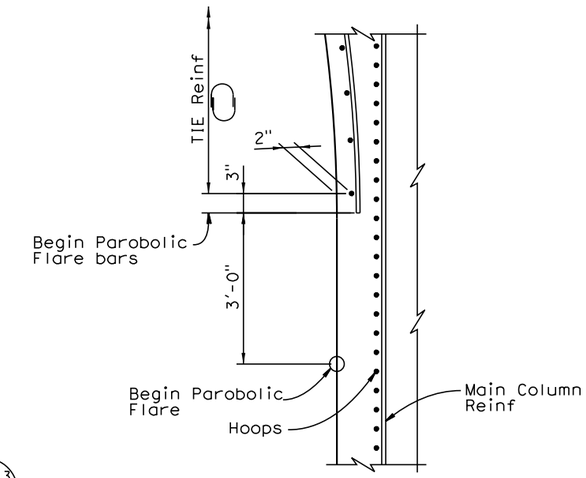

HOOP AND TIE DETAIL

No Scale

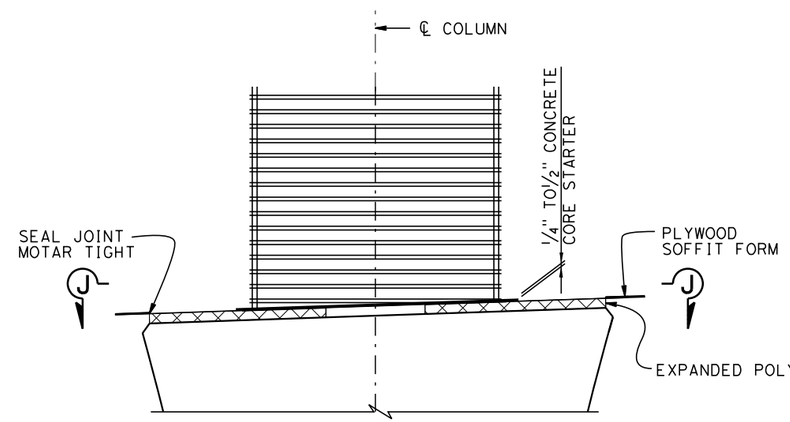

ELEVATION

NO SCALE

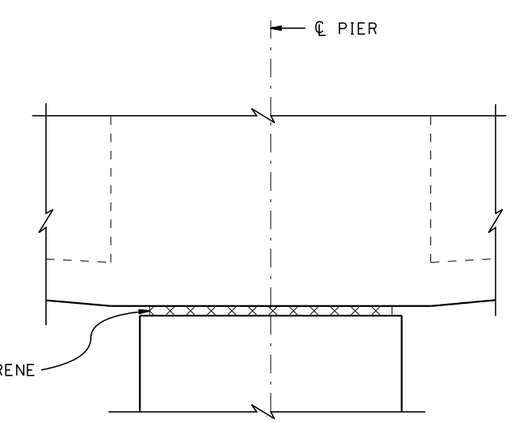

LONGITUDINAL ELEVATION

NO SCALE

65% SUBMITTAL, NOT FOR CONSTRUCTION

USERNAME => hhidalgo DATE PLOTTED => 3/20/2015 TIME PLOTTED => 1:50:22 PM

X
DESIGN OVERSIGHT
X
SIGN OFF DATE

DESIGN DETAIL SHEET (ENGLISH) (REV. 03/14/12)

	BY	CHECKED
DESIGN		
DETAILS	H. Hidalgo	
QUANTITIES	M. Philipps	

ORIGINAL SCALE IN INCHES FOR REDUCED PLANS 0 1 2 3

PREPARED FOR
TEHAMA COUNTY
PUBLIC WORKS DEPARTMENT

Michael Wolohan
PROJECT ENGINEER

BRIDGE NO. 08C-0374
POST MILES X

SACRAMENTO RIVER BRIDGE AT JELLYS FERRY ROAD

PIER DETAILS

UNIT: X
PROJECT NUMBER & PHASE: X
CONTRACT NO.: X

DISREGARD PRINTS BEARING EARLIER REVISION DATES

REVISION DATES X

SHEET 15 OF 33

FILE => t:\sacramento\legacy\proj_file\710054 - jellys ferry bridge\500_engineering\520_structures\521_cadd\054JF_dgn\054JF-i-p03_lo03.dgn

DIST	COUNTY	ROUTE	POST MILES TOTAL PROJECT	SHEET No	TOTAL SHEETS
02	TEH	CR		97	138

REGISTERED CIVIL ENGINEER DATE

PLANS APPROVAL DATE

REGISTERED PROFESSIONAL ENGINEER Michael Wolohan No. 67743 Exp. 6/30/15 CIVIL STATE OF CALIFORNIA

T. Y. Lin International or its officers or agents shall not be responsible for the accuracy or completeness of scanned copies of this plan sheet.

T·Y·LIN INTERNATIONAL
1601 Response Road, Suite 260
SACRAMENTO, CA 95815

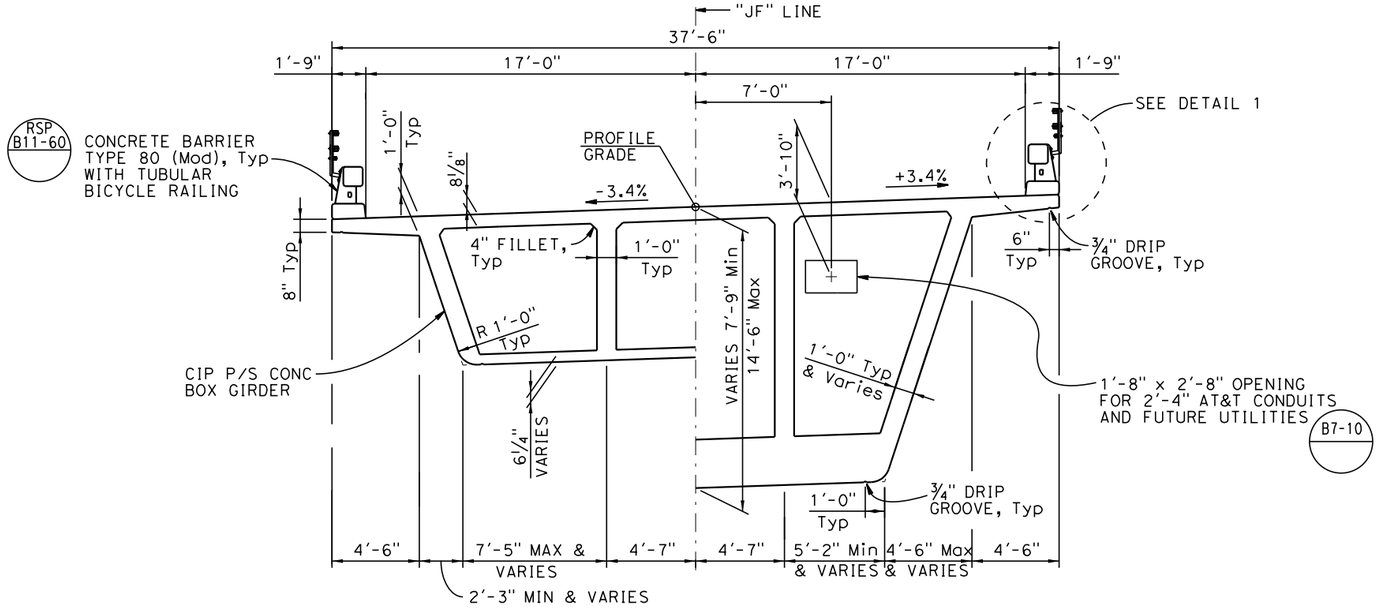

TYPICAL SECTION

1/4" = 1'-0"

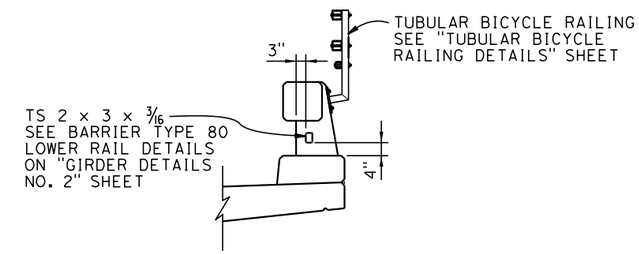

DETAIL 1

1/2"=1'-0"

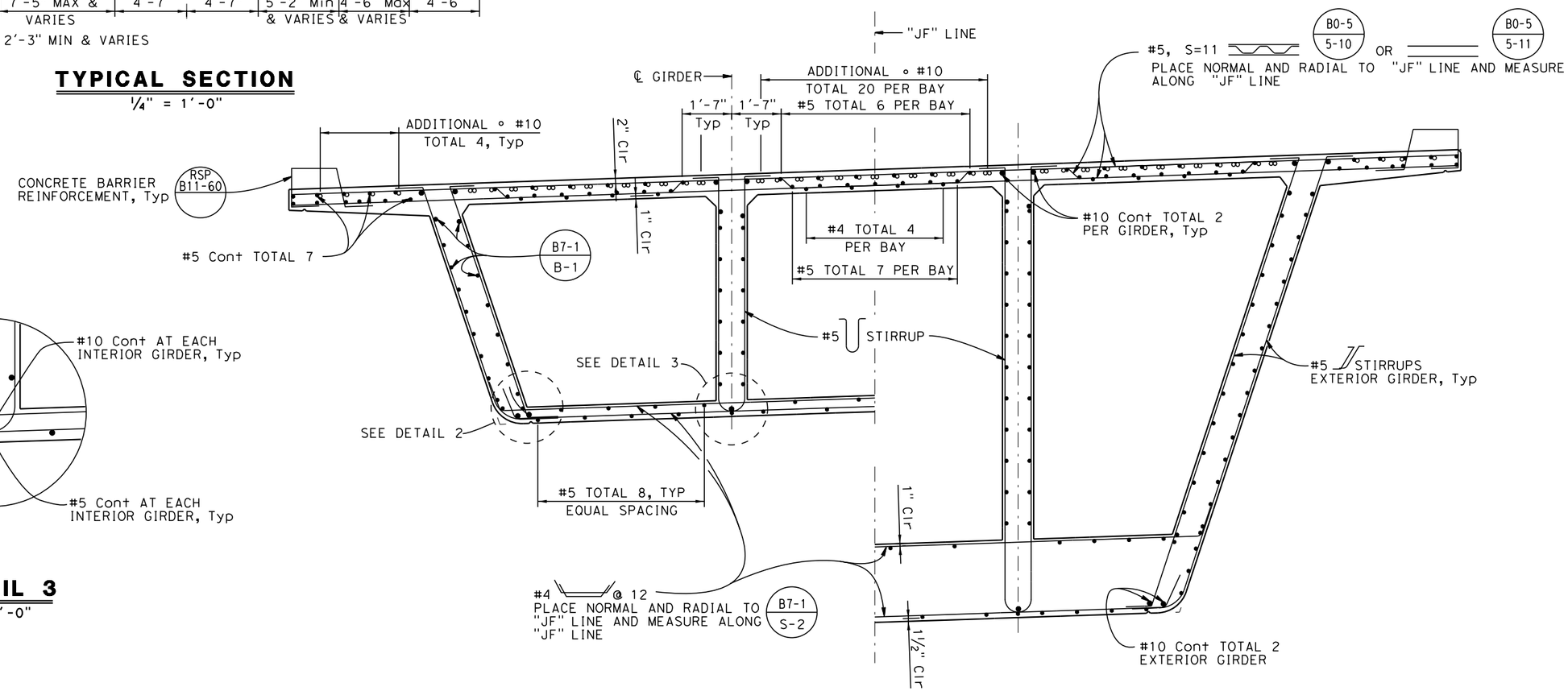

PART TYPICAL SECTION

1/2"=1'-0"

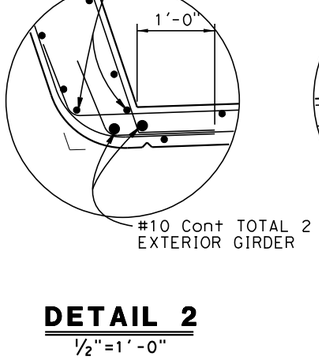

DETAIL 2

1/2"=1'-0"

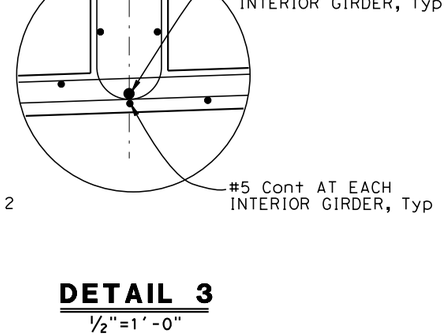

DETAIL 3

1/2"=1'-0"

65% SUBMITTAL, NOT FOR CONSTRUCTION

X DESIGN OVERSIGHT		DESIGN	BY	CHECKED	PREPARED FOR TEHAMA COUNTY PUBLIC WORKS DEPARTMENT
X SIGN OFF DATE		DETAILS	BY H. Hidalgo	CHECKED	
		QUANTITIES	BY M. Philipps	CHECKED	

Michael Wolohan
PROJECT ENGINEER

BRIDGE NO. 08C-0374
POST MILES X

SACRAMENTO RIVER BRIDGE AT JELLYS FERRY ROAD
TYPICAL SECTION

DESIGN DETAIL SHEET (ENGLISH) (REV. 03/14/12)

ORIGINAL SCALE IN INCHES FOR REDUCED PLANS 0 1 2 3

UNIT: X
PROJECT NUMBER & PHASE: X
CONTRACT NO.: X

DISREGARD PRINTS BEARING EARLIER REVISION DATES

REVISION DATES X

SHEET 16 OF 33

FILE => t:\sacramento\legacy\pri_file\710054 - jellys ferry bridge\500_engineering\520_structures\521_cadd\054JF_dgn\054JF-k-ts01.dgn

USERNAME => hhidalgo DATE PLOTTED => 3/20/2015 TIME PLOTTED => 1:50:24 PM

DIST	COUNTY	ROUTE	POST MILES TOTAL PROJECT	SHEET NO	TOTAL SHEETS
02	TEH	CR		98	138

REGISTERED CIVIL ENGINEER DATE

PLANS APPROVAL DATE

REGISTERED PROFESSIONAL ENGINEER Michael Wolohan No. 67743 Exp. 6/30/15 CIVIL STATE OF CALIFORNIA

T. Y. Lin International or its officers or agents shall not be responsible for the accuracy or completeness of scanned copies of this plan sheet.

T·Y·LIN INTERNATIONAL
1601 Response Road, Suite 260
SACRAMENTO, CA 95815

Legend:

- ⊠ Indicates point of no movement
- ○ Indicates point of inflection
- Indicates girder width or soffit thickness in inches
- □ Indicates deck access opening
- ● Indicates soffit access opening
- ▪ Indicates deck drain Type D3
- ← Indicates direction of flow

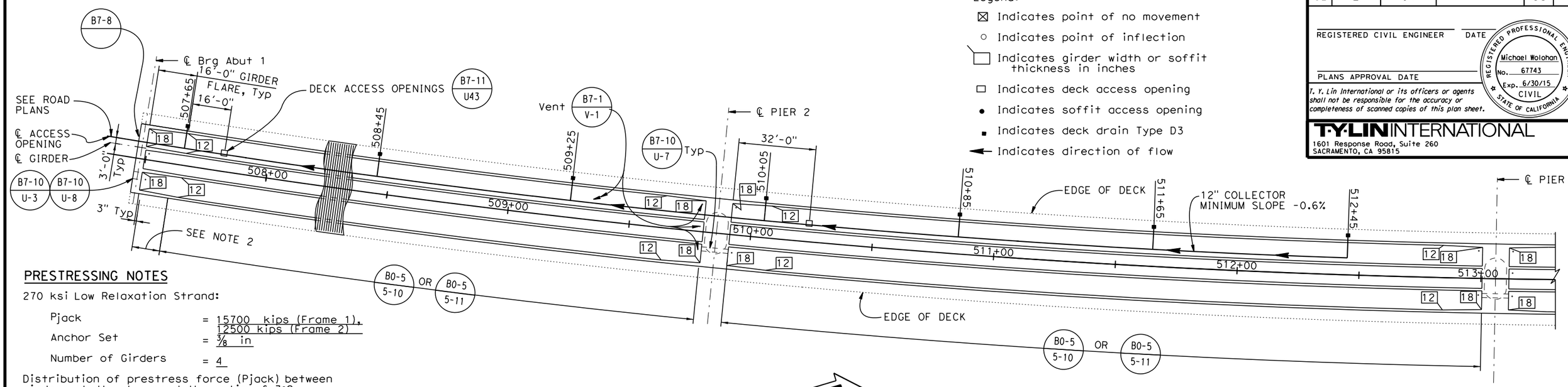

PRESTRESSING NOTES

270 ksi Low Relaxation Strand:

Pjack = 15700 kips (Frame 1), 12500 kips (Frame 2)

Anchor Set = 3/8 in

Number of Girders = 4

Distribution of prestress force (Pjack) between girders shall not exceed the ratio of 3:2. Maximum final force variation between girders shall not exceed 725 kips.

Concrete: f'_c = 5.0 ksi @ 28 days

f'_{ci} = 4.0 ksi @ time of stressing.

Contractor shall submit elongation calculations based on initial stress at
⊠ = 0.868 (Frame 1), 0.896 (Frame 2) times jacking stress.

Two end stressing shall be performed for both frames.

PLAN

1"=20'

NOTES:

1. For additional Deck Drain Details, see "DECK DRAINAGE DETAILS", sheet.
2. For Details of transverse reinforcement see the "END DIAPHRAGM DETAIL" on "GIRDER LAYOUT NO. 3" sheet.

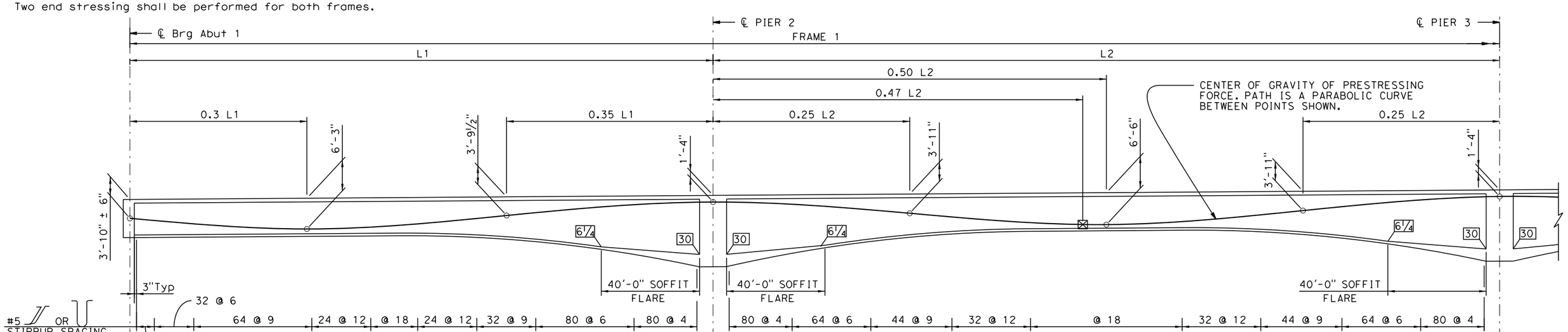

LONGITUDINAL SECTION

No Scale

65% SUBMITTAL, NOT FOR CONSTRUCTION

X DESIGN OVERSIGHT		DESIGN	BY M. Wolohan	CHECKED	
X SIGN OFF DATE		DETAILS	BY H. Hidalgo	CHECKED	
		QUANTITIES	BY M. Philipps	CHECKED	

PREPARED FOR TEHAMA COUNTY PUBLIC WORKS DEPARTMENT

Michael Wolohan
PROJECT ENGINEER

BRIDGE NO. 08C-0374
POST MILES X

SACRAMENTO RIVER BRIDGE AT JELLYS FERRY ROAD

GIRDER LAYOUT NO. 1

DESIGN DETAIL SHEET (ENGLISH) (REV. 03/14/12)

ORIGINAL SCALE IN INCHES FOR REDUCED PLANS 0 1 2 3

UNIT: X
PROJECT NUMBER & PHASE: X
CONTRACT NO.: X

DISREGARD PRINTS BEARING EARLIER REVISION DATES

REVISION DATES X

SHEET 17 OF 33

FILE => t:\sacramento\legacy\pri_file\710054 - jellys ferry bridge\500_engineering\520_structures\521_cadd\054JF_dgn\054JF-1-g_lo01.dgn

USERNAME => nhidalgo DATE PLOTTED => 3/20/2015 TIME PLOTTED => 1:50:27 PM

DIST	COUNTY	ROUTE	POST MILES TOTAL PROJECT	SHEET No	TOTAL SHEETS
02	TEH	CR		99	138

REGISTERED CIVIL ENGINEER DATE

PLANS APPROVAL DATE

REGISTERED PROFESSIONAL ENGINEER
Michael Wolohan
No. 67743
Exp. 6/30/15
CIVIL
STATE OF CALIFORNIA

T. Y. Lin International or its officers or agents shall not be responsible for the accuracy or completeness of scanned copies of this plan sheet.

T·Y·LIN INTERNATIONAL
1601 Response Road, Suite 260
SACRAMENTO, CA 95815

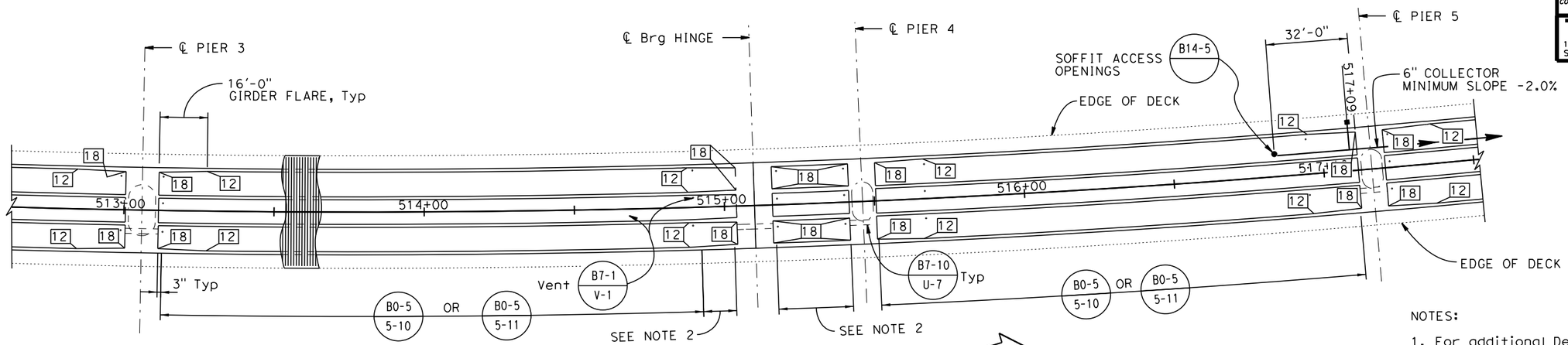

PLAN
1"=20'

NOTES:

1. For additional Deck Drain Details, see "DECK DRAINAGE DETAILS", sheet.
2. For Details of transverse reinforcement see "HINGE DETAILS NO. 1" sheet.

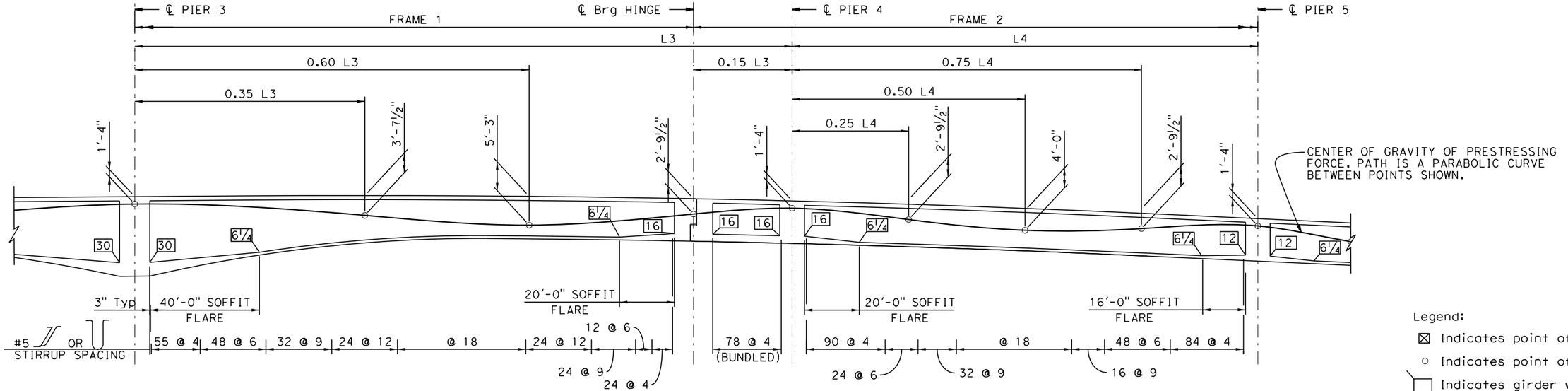

LONGITUDINAL SECTION
No Scale

Legend:

- ⊠ Indicates point of no movement
- ○ Indicates point of inflection
- Indicates girder width or soffit thickness in inches
- □ Indicates deck access opening
- ● Indicates soffit access opening
- ▪ Indicates deck drain Type D3
- ← Indicates direction of flow

65% SUBMITTAL, NOT FOR CONSTRUCTION

USERNAME => hhidalgo DATE PLOTTED => 3/20/2015 TIME PLOTTED => 11:50:29 PM

X
DESIGN OVERSIGHT
X
SIGN OFF DATE

	BY	CHECKED
DESIGN	M. Wolohan	
DETAILS	H. Hidalgo	
QUANTITIES	M. Philipps	

PREPARED FOR
TEHAMA COUNTY
PUBLIC WORKS DEPARTMENT

Michael Wolohan
PROJECT ENGINEER

BRIDGE NO. 08C-0374
POST MILES X

SACRAMENTO RIVER BRIDGE AT JELLYS FERRY ROAD
GIRDER LAYOUT NO. 2

DESIGN DETAIL SHEET (ENGLISH) (REV. 03/14/12)

ORIGINAL SCALE IN INCHES FOR REDUCED PLANS 0 1 2 3

UNIT: X
PROJECT NUMBER & PHASE: X
CONTRACT NO.: X

DISREGARD PRINTS BEARING EARLIER REVISION DATES

REVISION DATES: X

SHEET 18 OF 33

FILE => t:\sacramento\legacy\prj_file\710054 - jellys ferry bridge\500_engineering\520_structures\521_cadd\054JF_dgn\054JF-1-g_lo02.dgn

DIST	COUNTY	ROUTE	POST MILES TOTAL PROJECT	SHEET No	TOTAL SHEETS
02	TEH	CR		100	138

REGISTERED CIVIL ENGINEER DATE

PLANS APPROVAL DATE

REGISTERED PROFESSIONAL ENGINEER Michael Wolohan No. 67743 Exp. 6/30/15 CIVIL STATE OF CALIFORNIA

T. Y. Lin International or its officers or agents shall not be responsible for the accuracy or completeness of scanned copies of this plan sheet.

T·Y·LIN INTERNATIONAL
1601 Response Road, Suite 260
SACRAMENTO, CA 95815

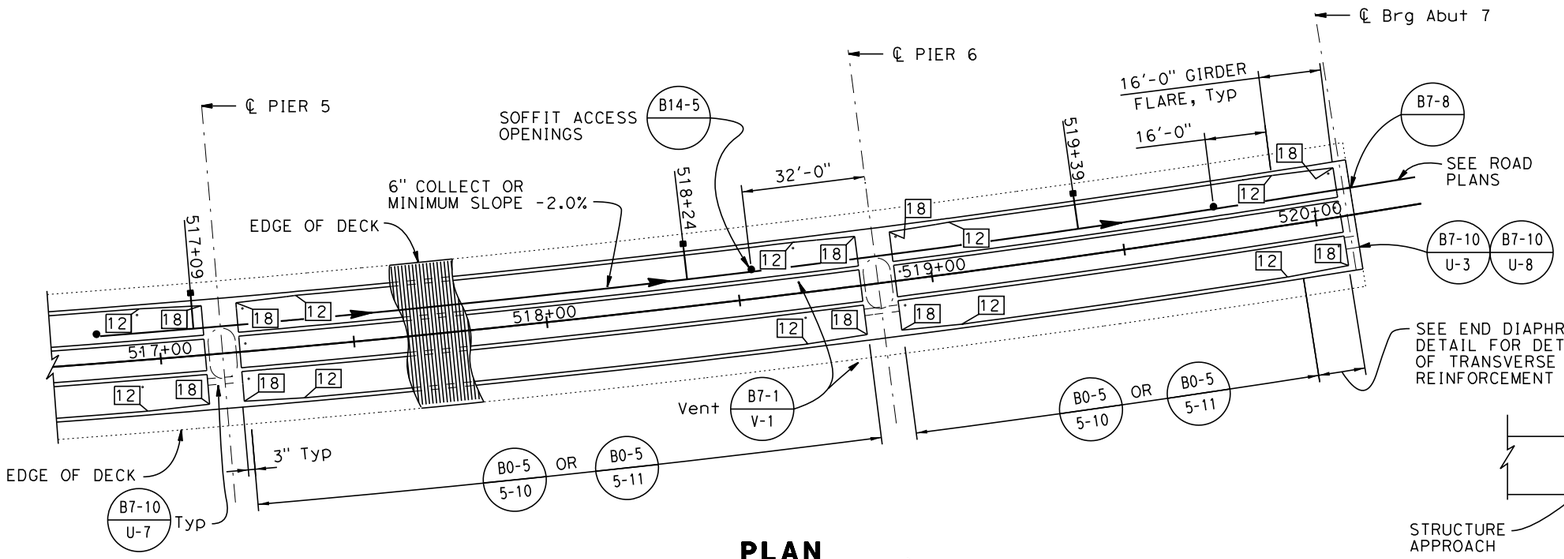

PLAN
1"=20'

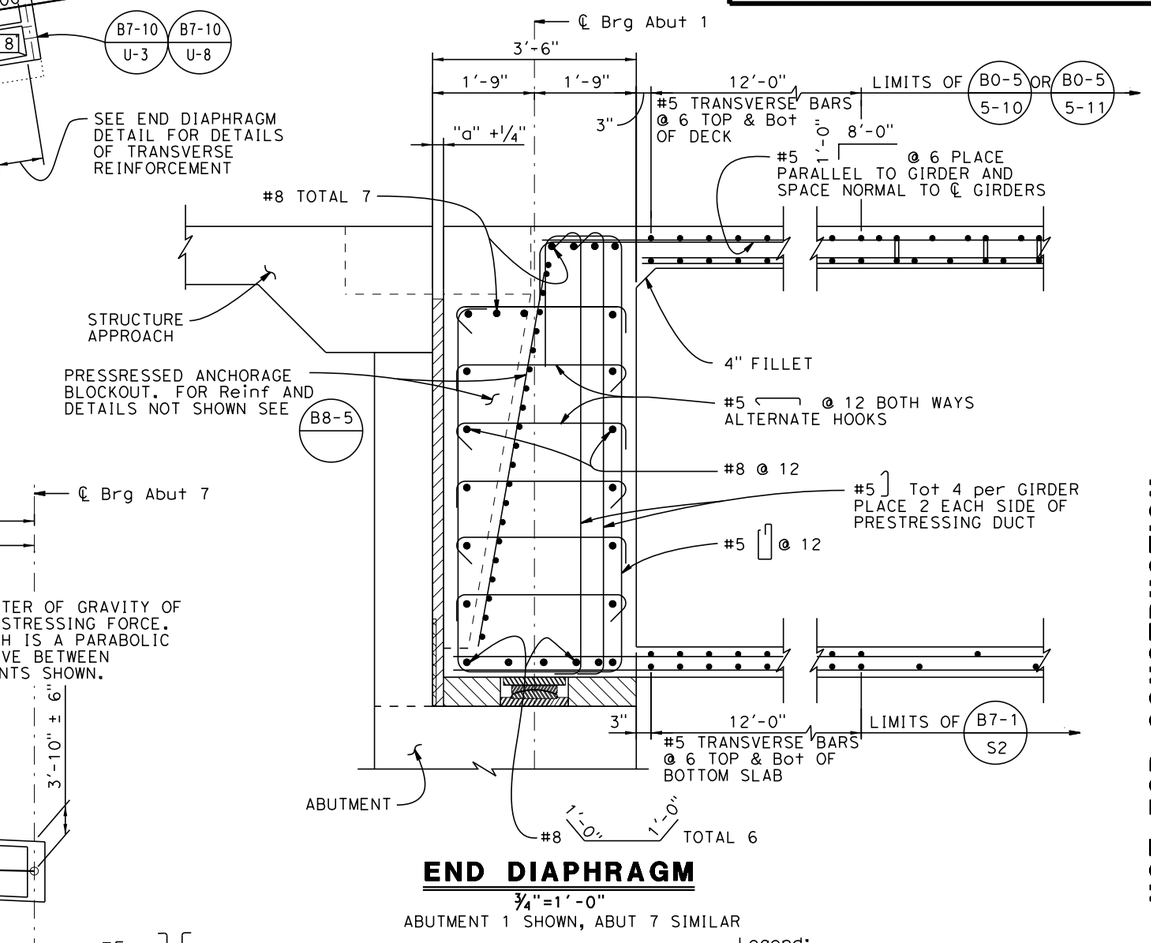

END DIAPHRAGM
3/4"=1'-0"
ABUTMENT 1 SHOWN, ABUT 7 SIMILAR

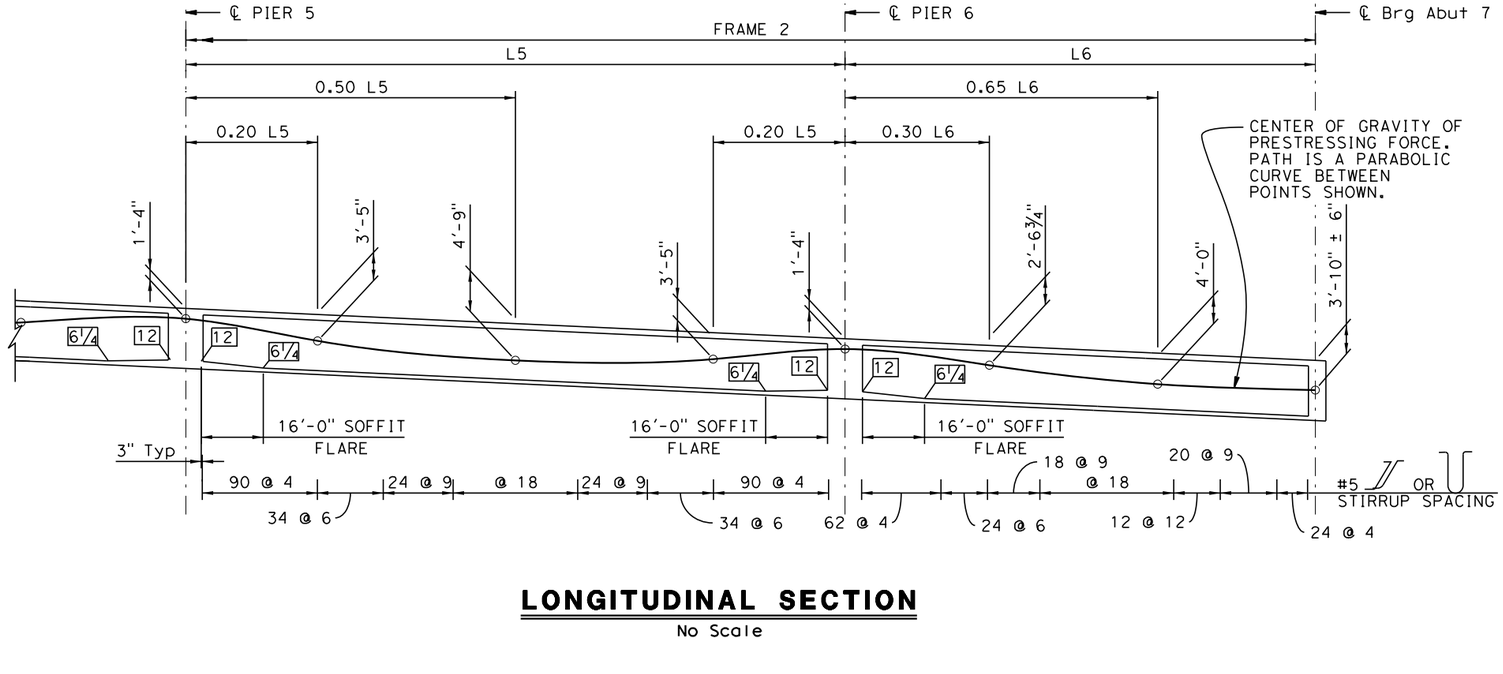

LONGITUDINAL SECTION
No Scale

Legend:

- ⊠ Indicates point of no movement
- ○ Indicates point of inflection
- Indicates girder width or soffit thickness in inches
- □ Indicates deck access opening
- ● Indicates soffit access opening
- ▪ Indicates deck drain Type D3
- ← Indicates direction of flow

65% SUBMITTAL, NOT FOR CONSTRUCTION

USERNAME => hhidalgo DATE PLOTTED => 3/20/2015 TIME PLOTTED => 11:50:31 PM

X
DESIGN OVERSIGHT
X
SIGN OFF DATE

	BY	CHECKED
DESIGN	M. Wolohan	
DETAILS	H. Hidalgo	
QUANTITIES	M. Philipps	

PREPARED FOR
TEHAMA COUNTY
PUBLIC WORKS DEPARTMENT

Michael Wolohan
PROJECT ENGINEER

BRIDGE NO. 08C-0374
POST MILES X

SACRAMENTO RIVER BRIDGE AT JELLYS FERRY ROAD
GIRDER LAYOUT NO. 3

DESIGN DETAIL SHEET (ENGLISH) (REV. 03/14/12)

ORIGINAL SCALE IN INCHES FOR REDUCED PLANS 0 1 2 3

UNIT: X
PROJECT NUMBER & PHASE: X
CONTRACT NO.: X

DISREGARD PRINTS BEARING EARLIER REVISION DATES

REVISION DATES X

SHEET 19 OF 33

FILE => t:\sacramento\legacy\pri_file\710054 - jellys ferry bridge\500_engineering\520_structures\521_cadd\054JF_dgn\054JF-1-g_lo03.dgn

DIST	COUNTY	ROUTE	POST MILES TOTAL PROJECT	SHEET No	TOTAL SHEETS
02	TEH	CR		101	138

REGISTERED CIVIL ENGINEER DATE

PLANS APPROVAL DATE

REGISTERED PROFESSIONAL ENGINEER
Michael Wolohan
No. 67743
Exp. 6/30/15
CIVIL
STATE OF CALIFORNIA

T. Y. Lin International or its officers or agents shall not be responsible for the accuracy or completeness of scanned copies of this plan sheet.

T·Y·LIN INTERNATIONAL
1601 Response Road, Suite 260
SACRAMENTO, CA 95815

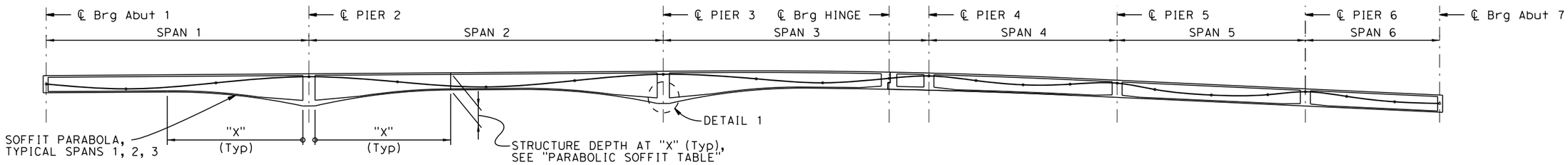

LONGITUDINAL SECTION

No Scale

PARABOLIC SOFFIT TABLE		
SPAN	RANGE "X"	STRUCTURE DEPTH AT "X" FORMULA
1-3	0':122.5'	$14.5'-(3/27.22)(X)+(3/6669.44)(X)^2$
4-6	-	7.75' (CONSTANT DEPTH)

"X" INDICATES LONGITUDINAL DIMENSION MEASURED IN FEET, FROM THE BEGINNING OF THE PARABOLIC SOFFIT TO ANY POINT WITHIN THE LENGTH OF THE PARABOLA, (SEE DETAIL 1)

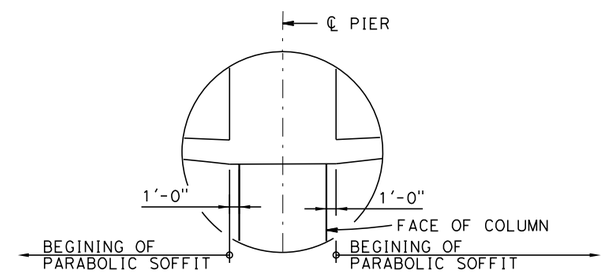

DETAIL 1

NO SCALE

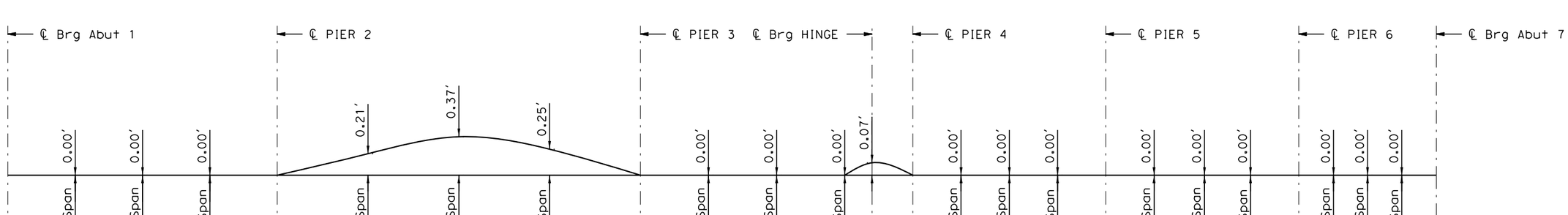

CAMBER DIAGRAM

No Scale

65% SUBMITTAL, NOT FOR CONSTRUCTION

X
DESIGN OVERSIGHT
X
SIGN OFF DATE

	BY	CHECKED
DESIGN		
DETAILS	H. Hidalgo	
QUANTITIES	M. Philipps	

PREPARED FOR
TEHAMA COUNTY
PUBLIC WORKS DEPARTMENT

Michael Wolohan
PROJECT ENGINEER

BRIDGE NO. 08C-0374
POST MILES X

SACRAMENTO RIVER BRIDGE AT JELLYS FERRY ROAD
GIRDER DETAILS NO. 1

DESIGN DETAIL SHEET (ENGLISH) (REV. 03/14/12)

ORIGINAL SCALE IN INCHES FOR REDUCED PLANS 0 1 2 3

UNIT: X
PROJECT NUMBER & PHASE: X
CONTRACT NO.: X

DISREGARD PRINTS BEARING EARLIER REVISION DATES

REVISION DATES X

SHEET 20 OF 33

FILE => t:\sacramento\legacy\proj_file\710054 - jellys ferry bridge\500_engineering\520_structures\521_cadd\054JF_dgn\054JF-1-gdt01.dgn

USERNAME => hhidalgo DATE PLOTTED => 3/20/2015 TIME PLOTTED => 1:50:33 PM

DIST	COUNTY	ROUTE	POST MILES TOTAL PROJECT	SHEET No	TOTAL SHEETS
02	TEH	CR		102	138

REGISTERED CIVIL ENGINEER DATE

PLANS APPROVAL DATE

REGISTERED PROFESSIONAL ENGINEER Michael Wolohan No. 67743 Exp. 6/30/15 CIVIL STATE OF CALIFORNIA

T. Y. Lin International or its officers or agents shall not be responsible for the accuracy or completeness of scanned copies of this plan sheet.

T·Y·LIN INTERNATIONAL
1601 Response Road, Suite 260
SACRAMENTO, CA 95815

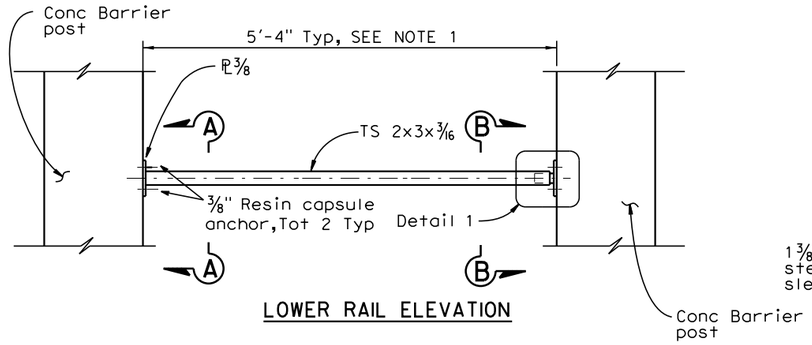

LOWER RAIL ELEVATION

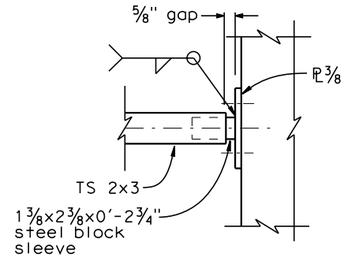

DETAIL I

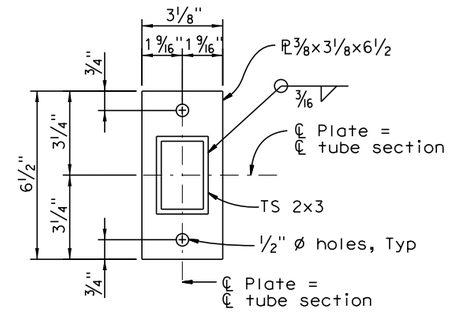

SECTION A-A

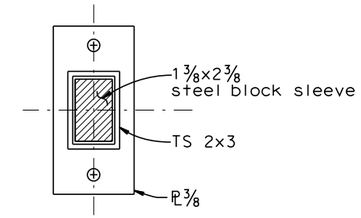

SECTION B-B

See Section A-A for details not shown

Note:

1. Clear distance between barrier post may vary at hinge or expansion joints or wingwalls.

BARRIER TYPE 80 LOWER RAIL DETAILS

No Scale

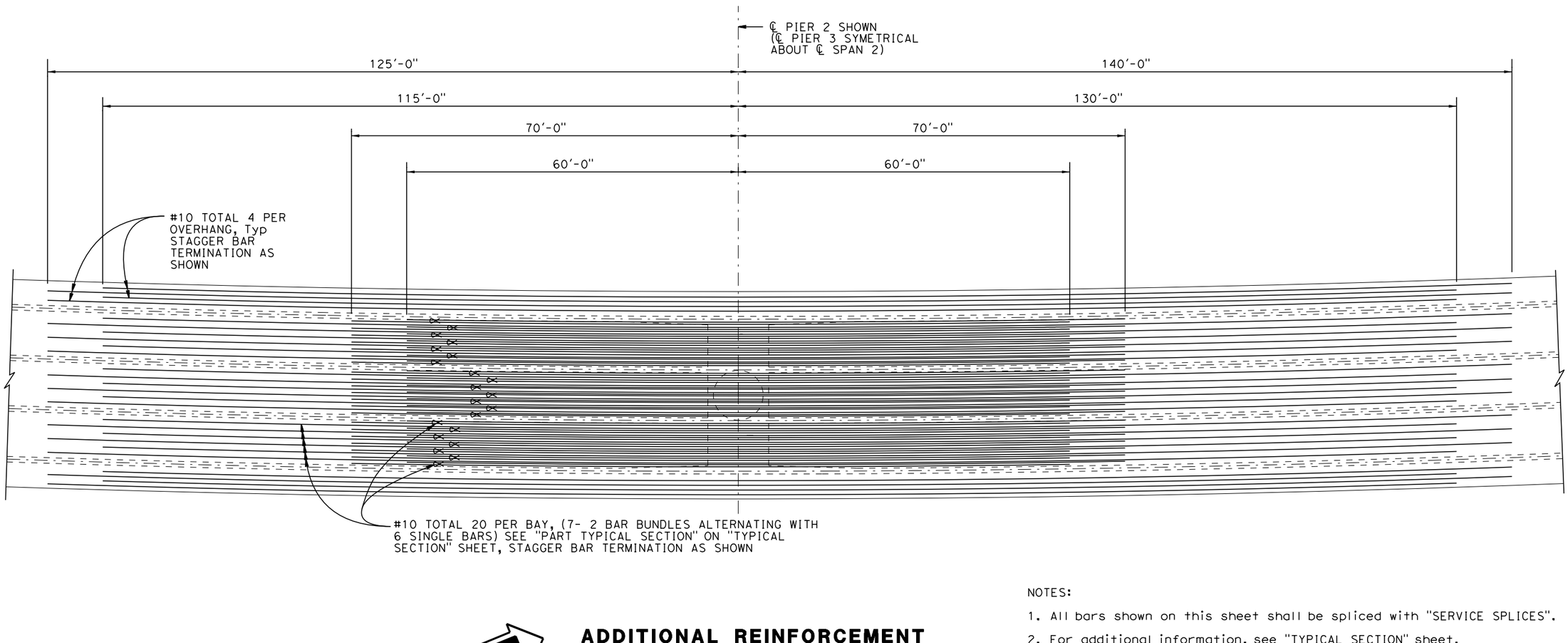

ADDITIONAL REINFORCEMENT

NO SCALE

NOTES:

1. All bars shown on this sheet shall be spliced with "SERVICE SPLICES".
2. For additional information, see "TYPICAL SECTION" sheet.

65% SUBMITTAL, NOT FOR CONSTRUCTION

USERNAME => hhidalgo DATE PLOTTED => 3/20/2015 TIME PLOTTED => 11:50:35 PM

X
DESIGN OVERSIGHT
X
SIGN OFF DATE

	BY	CHECKED
DESIGN		
DETAILS	H. Hidalgo	
QUANTITIES	M. Philipps	

PREPARED FOR
TEHAMA COUNTY
PUBLIC WORKS DEPARTMENT

Michael Wolohan
PROJECT ENGINEER

BRIDGE NO. 08C-0374
POST MILES X

SACRAMENTO RIVER BRIDGE AT JELLYS FERRY ROAD
GIRDER DETAILS NO. 2

DESIGN DETAIL SHEET (ENGLISH) (REV. 03/14/12)

ORIGINAL SCALE IN INCHES FOR REDUCED PLANS 0 1 2 3

UNIT: X
PROJECT NUMBER & PHASE: X
CONTRACT NO.: X

DISREGARD PRINTS BEARING EARLIER REVISION DATES

REVISION DATES X

SHEET 21 OF 33

FILE => t:\sacramento\legacy\prj_file\710054 - jellys ferry bridge\500_engineering\520_structures\521_cadd\054JF_dgn\054JF-1-gdt02.dgn

DIST	COUNTY	ROUTE	POST MILES TOTAL PROJECT	SHEET No	TOTAL SHEETS
02	TEH	CR		103	138

REGISTERED CIVIL ENGINEER DATE

PLANS APPROVAL DATE

REGISTERED PROFESSIONAL ENGINEER Michael Wolohan No. 67743 Exp. 6/30/15 CIVIL STATE OF CALIFORNIA

T. Y. Lin International or its officers or agents shall not be responsible for the accuracy or completeness of scanned copies of this plan sheet.

T·Y·LIN INTERNATIONAL
1601 Response Road, Suite 260
SACRAMENTO, CA 95815

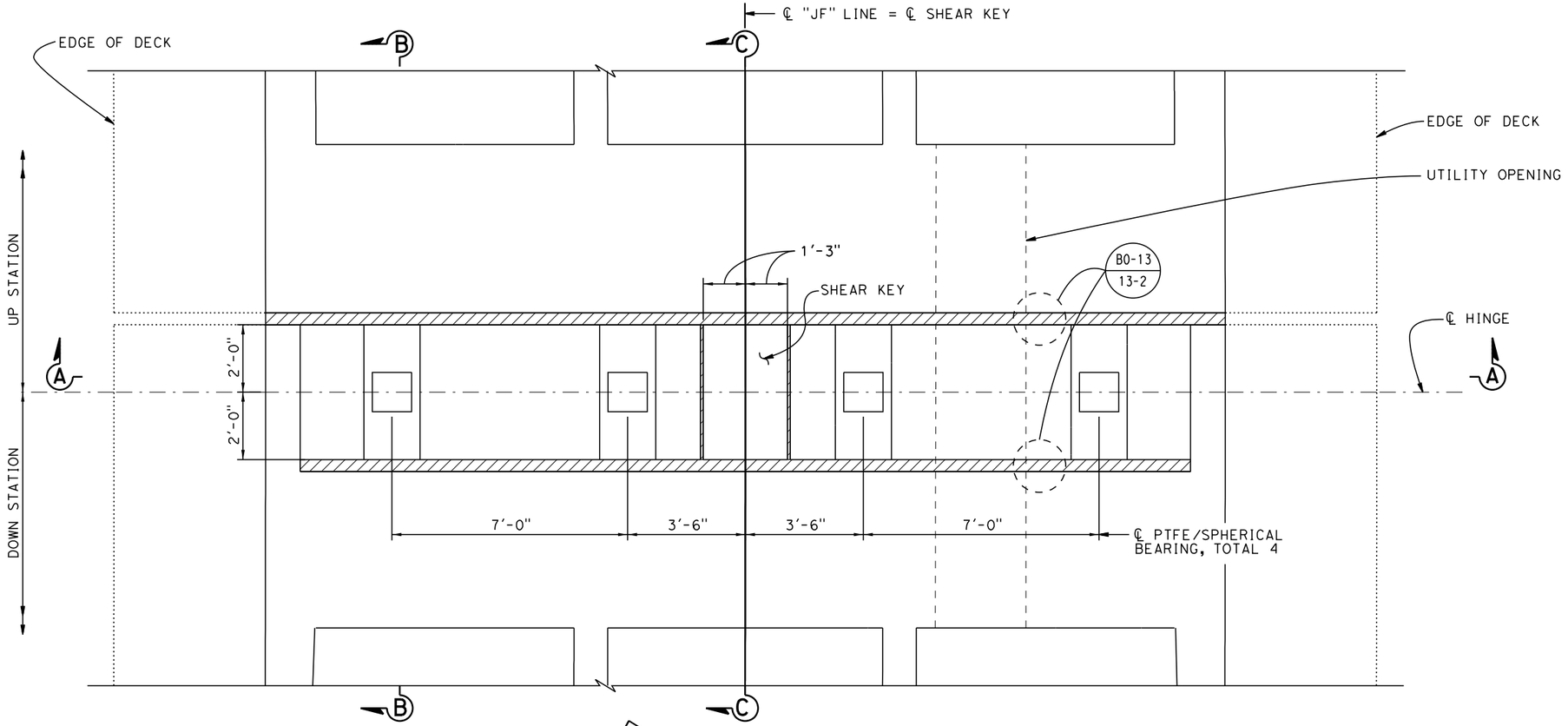

PLAN
½"=1'-0"

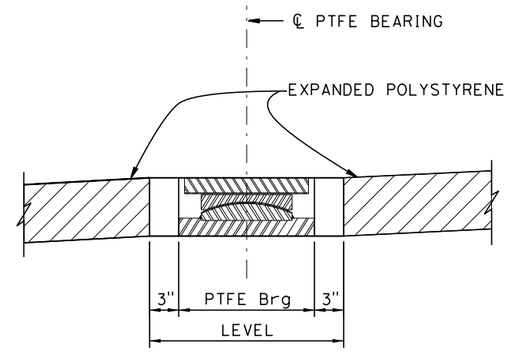

PTFE BEARING SEAT
NO SCALE

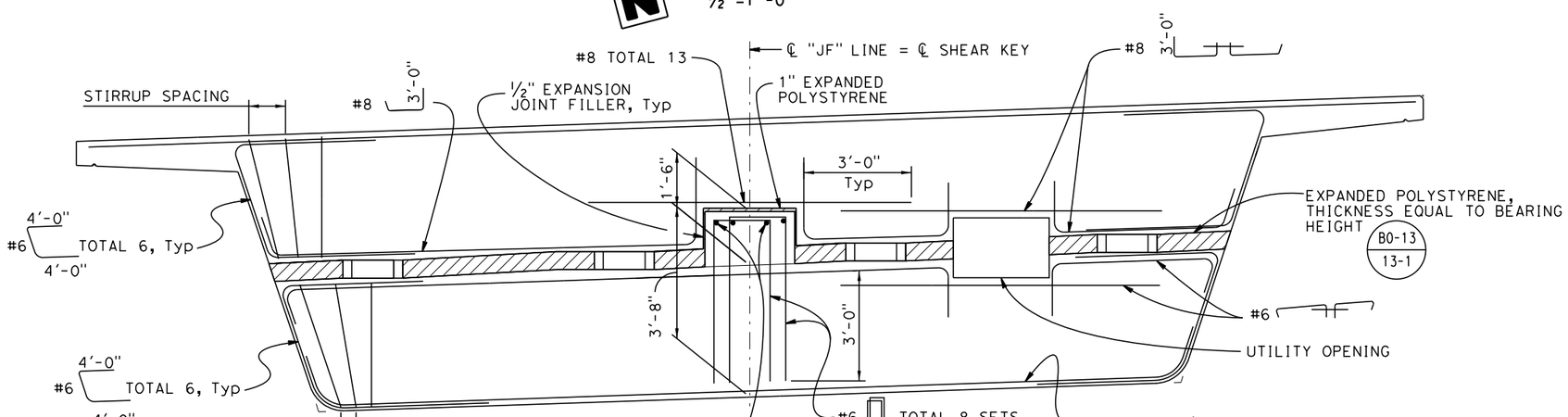

SECTION A-A
½"=1'-0"

NOTES:

1. FOR SECTION B-B, C-C SEE "HINGE DETAILS NO.1", SHEET.

65% SUBMITTAL, NOT FOR CONSTRUCTION

USERNAME => hhidalgo DATE PLOTTED => 3/20/2015 TIME PLOTTED => 1:50:37 PM

X
DESIGN OVERSIGHT
X
SIGN OFF DATE

	BY	CHECKED
DESIGN	M. Philipps	
DETAILS	H. Hidalgo	
QUANTITIES	M. Philipps	

PREPARED FOR
TEHAMA COUNTY
PUBLIC WORKS DEPARTMENT

Michael Wolohan
PROJECT ENGINEER

BRIDGE NO. 08C-0374
POST MILES X

SACRAMENTO RIVER BRIDGE AT JELLYS FERRY ROAD
HINGE LAYOUT

DESIGN DETAIL SHEET (ENGLISH) (REV. 03/14/12)

ORIGINAL SCALE IN INCHES FOR REDUCED PLANS 0 1 2 3

UNIT: X
PROJECT NUMBER & PHASE: X
CONTRACT NO.: X

DISREGARD PRINTS BEARING EARLIER REVISION DATES

REVISION DATES X

SHEET 22 OF 33

FILE => t:\sacramento\legacy\pri_file\710054 - jellys ferry bridge\500_engineering\520_structures\521_cadd\054JF_dgn\054JF-n-hinge00.dgn

DIST	COUNTY	ROUTE	POST MILES TOTAL PROJECT	SHEET No	TOTAL SHEETS
02	TEH	CR		104	138

REGISTERED CIVIL ENGINEER DATE

PLANS APPROVAL DATE

REGISTERED PROFESSIONAL ENGINEER Michael Wolohan No. 67743 Exp. 6/30/15 CIVIL STATE OF CALIFORNIA

T. Y. Lin International or its officers or agents shall not be responsible for the accuracy or completeness of scanned copies of this plan sheet.

T·Y·LIN INTERNATIONAL
1601 Response Road, Suite 260
SACRAMENTO, CA 95815

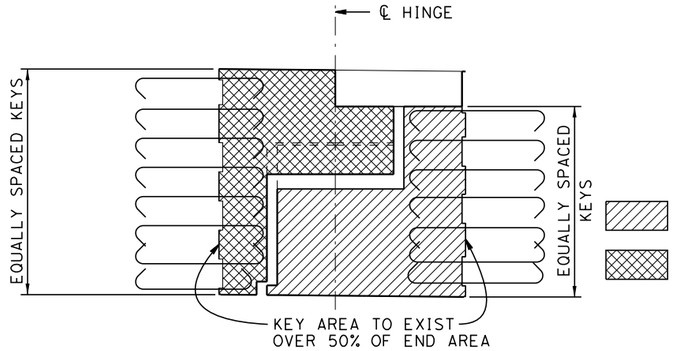

HINGE CLOSURE POUR DETAIL

NO SCALE

INDICATES CAST-IN-PLACE CONCRETE TO BE PLACED AFTER STRESSING IS COMPLETED.

INDICATES CAST-IN-PLACE CONCRETE TO BE PLACED AFTER SUPPORTING SIDE OF HINGE IS CONSTRUCTED AND BEARINGS ARE PROPERLY POSITIONED. CONCRETE SHALL BE SAME STRENGTH GRADE AS CAST-IN-PLACE PRESTRESSED CONCRETE. FALSEWORK SHALL REMAIN IN PLACE UNTIL CONCRETE HAS ATTAINED A STRENGTH OF AT LEAST 3600 PSI.

NOTES:

1. See bridge details B0-13 / 13-1 & B0-13 / 13-2.
2. To provide for free movement of completed hinge. concrete shall be excluded from the joint by sealing all openings.
3. Bars may be placed with hooks horizontal if required for clearance.
4. Adjust angle of bars at key to clear.
5. Reinforcement shall be spaced along ℄ hinge and placed parallel to ℄ structure.
6. For dimensions "a" see "HINGE JOINT SEAL DEPTHS".
7. Adjust to clear joint seal assembly.
8. Verify blockout dimensions with joint seal manufacturer.
9. See "PTFE/SPHERICAL BEARING DETAILS" sheet.
10. Adjust bar position to clear shear key and utility openings.
11. Adjust stirrup height to clear shear key and utility openings.

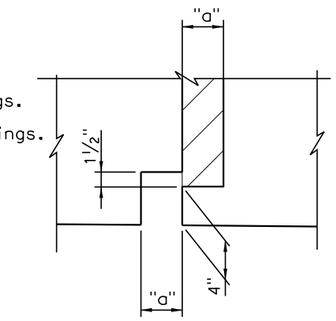

DETAIL 1

1½"=1'-0"

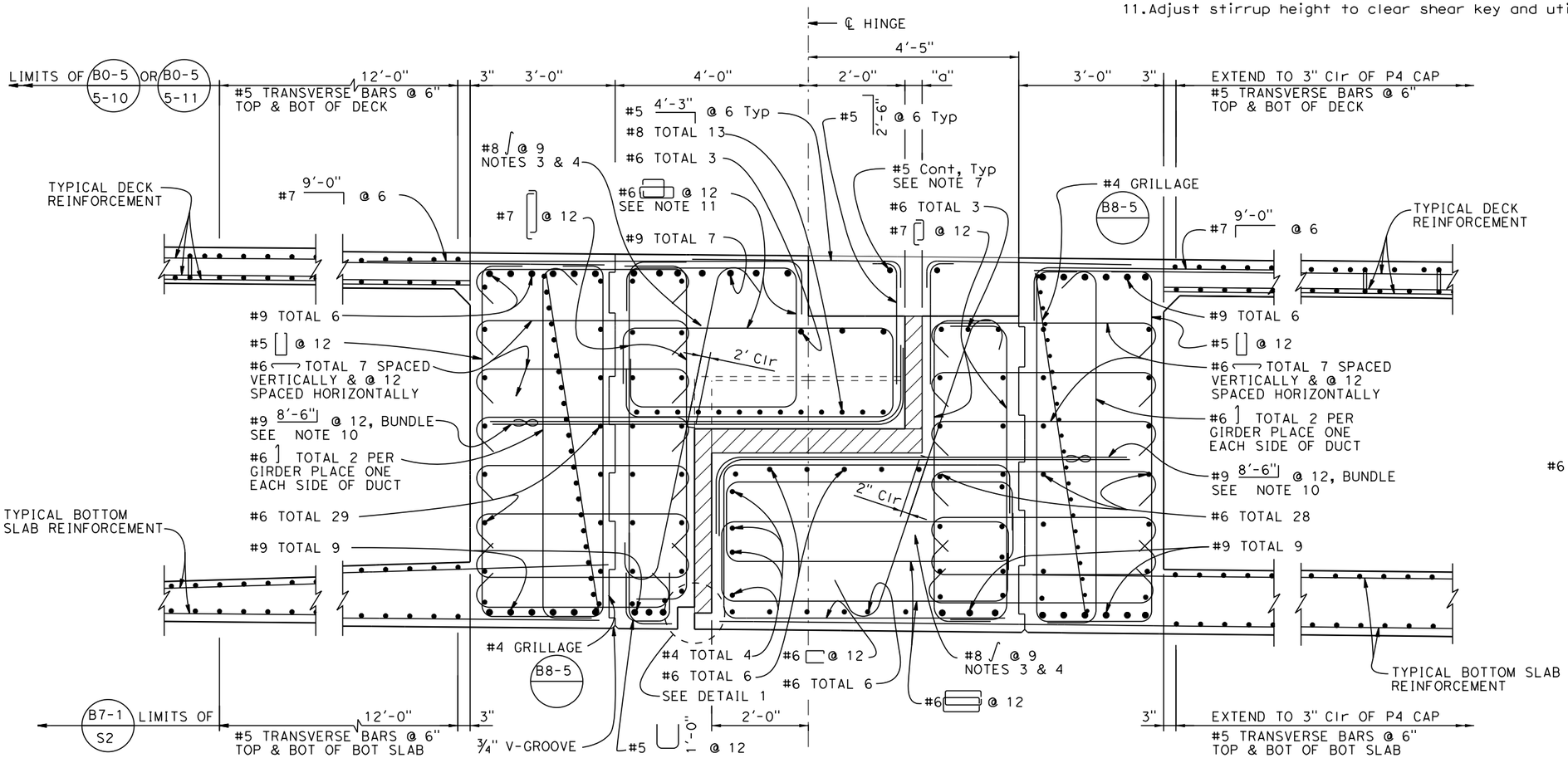

SECTION B-B

¾"=1'-0"

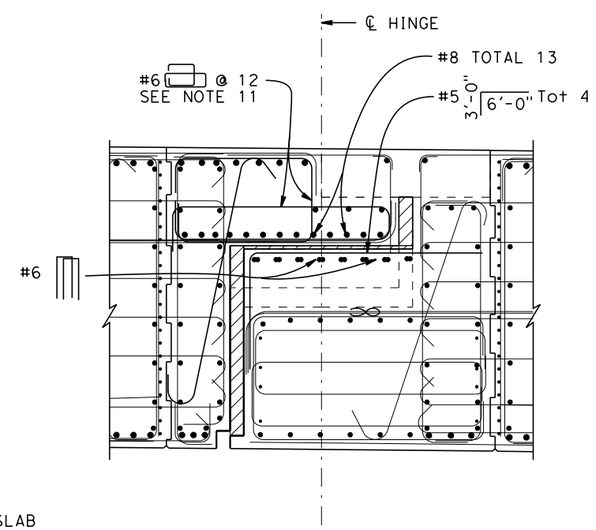

SECTION C-C

½"=1'-0"

LEGEND:

∞ Indicates bundle bars.

65% SUBMITTAL, NOT FOR CONSTRUCTION

TIME PLOTTED => 1:50:39 PM

USERNAME => hhidalgo DATE PLOTTED => 3/20/2015

X DESIGN OVERSIGHT	DESIGN	BY M. Philipps	CHECKED	
X SIGN OFF DATE	DETAILS	BY H. Hidalgo	CHECKED	
	QUANTITIES	BY M. Philipps	CHECKED	

PREPARED FOR **TEHAMA COUNTY** PUBLIC WORKS DEPARTMENT

Michael Wolohan — PROJECT ENGINEER

BRIDGE NO. 08C-0374 — POST MILES X

SACRAMENTO RIVER BRIDGE AT JELLYS FERRY ROAD

HINGE DETAILS NO. 1

DESIGN DETAIL SHEET (ENGLISH) (REV. 03/14/12)

ORIGINAL SCALE IN INCHES FOR REDUCED PLANS 0 1 2 3

UNIT: X
PROJECT NUMBER & PHASE: X
CONTRACT NO.: X

DISREGARD PRINTS BEARING EARLIER REVISION DATES

REVISION DATES X

SHEET 23 OF 33

FILE => t:\sacramento\legacy\pri_file\710054 - jellys ferry bridge\500_engineering\520_structures\521_cadd\054JF_dgn\054JF-n-hingedt01.dgn

DIST	COUNTY	ROUTE	POST MILES TOTAL PROJECT	SHEET No	TOTAL SHEETS
02	TEH	CR		105	138

REGISTERED CIVIL ENGINEER DATE

PLANS APPROVAL DATE

REGISTERED PROFESSIONAL ENGINEER Michael Wolohan No. 67743 Exp. 6/30/15 CIVIL STATE OF CALIFORNIA

T. Y. Lin International or its officers or agents shall not be responsible for the accuracy or completeness of scanned copies of this plan sheet.

T·Y·LIN INTERNATIONAL
1601 Response Road, Suite 260
SACRAMENTO, CA 95815

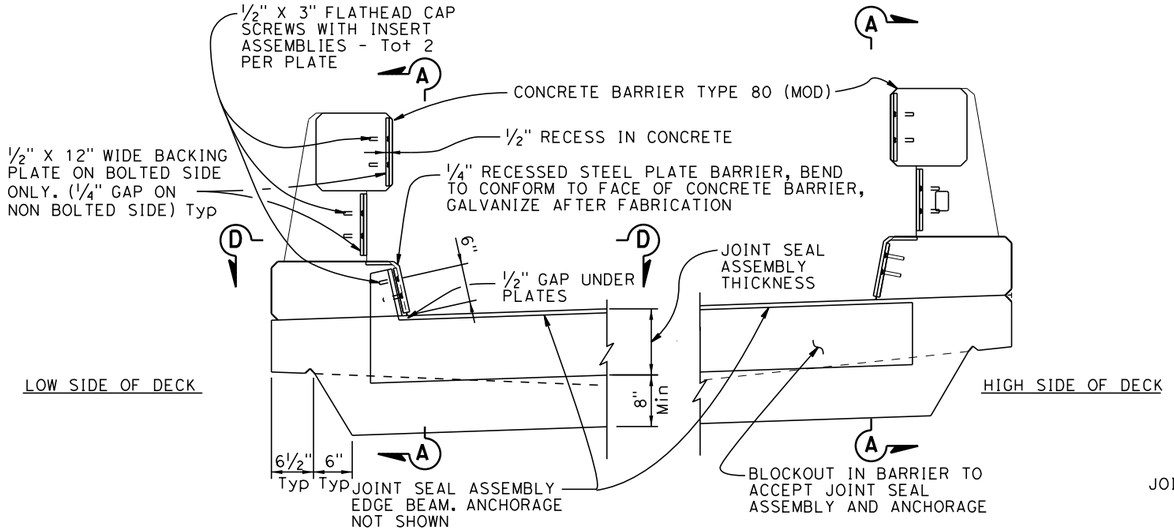

SEAL INSTALLATION

1"=1'-0"

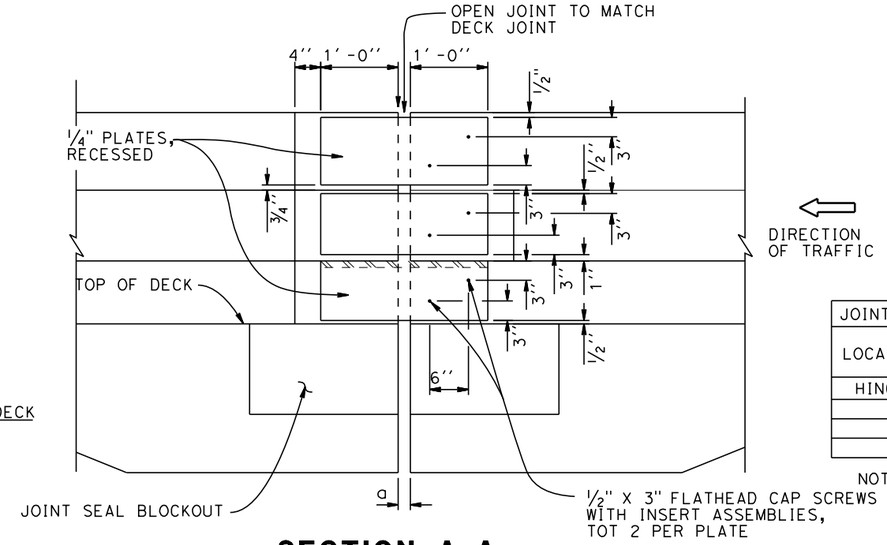

SECTION A-A

NO SCALE

NOTE: BARRIER TYPE 80 SHOWN

JOINT INFORMATION		"a" DIMENSIONS			
LOCATION	MOVEMENT RATING (M.R.)	SKEW	WINTER	SPRING & FALL	SUMMER
HINGE	9"	0°	4¼"	3¼"	2¼"

NOTE: FOR DETAILS NOT SHOWN, SEE BRIDGE PLANS

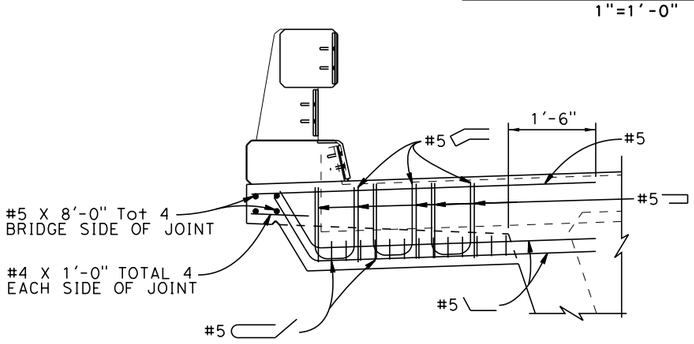

SECTION B-B

¾"=1'-0"

REINFORCEMENT SHOWN IS IN ADDITION TO SLAB REINFORCEMENT

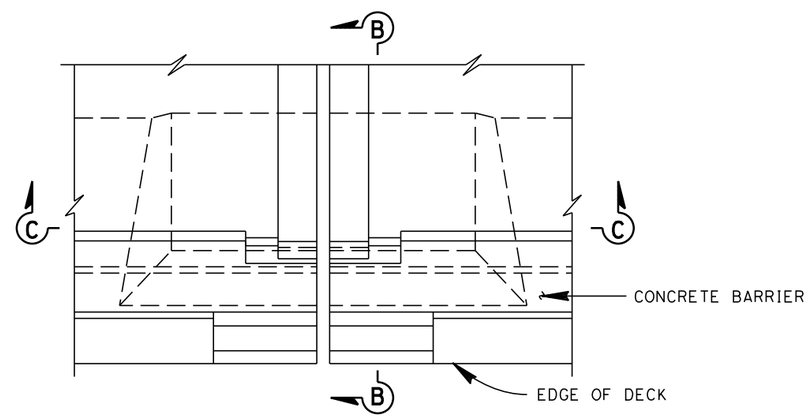

PLAN- DECK JOINT

¾"=1'-0"

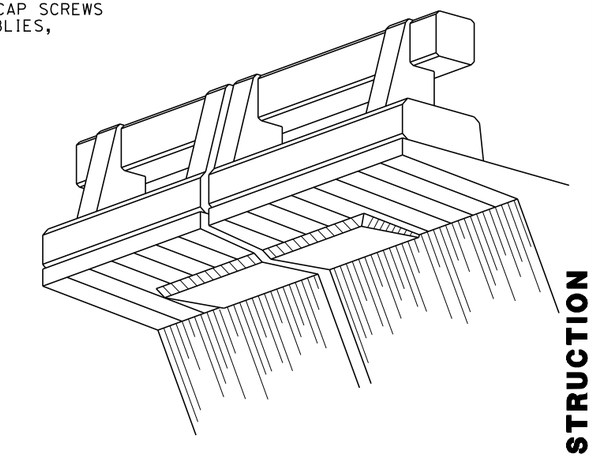

DECK OVERHANG AT HINGE

NO SCALE

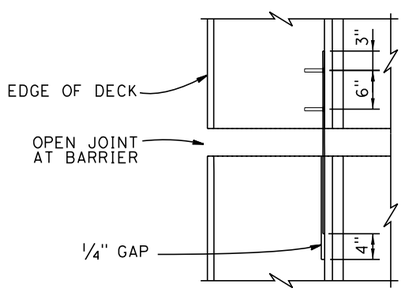

SECTION D-D

NO SCALE

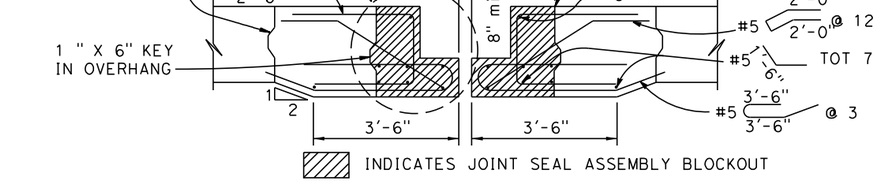

SECTION C-C

NO SCALE

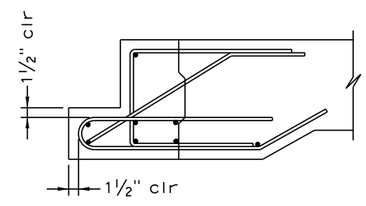

DETAIL 1

NO SCALE

NOTES:

1. To be verified with Seal Manufacturer.
2. For details not shown, see "BRIDGE PLANS".

65% SUBMITTAL, NOT FOR CONSTRUCTION

USERNAME => hhidalgo DATE PLOTTED => 3/20/2015 TIME PLOTTED => 1:50:41 PM

X DESIGN OVERSIGHT	DESIGN	BY M. Philipps	CHECKED
X SIGN OFF DATE	DETAILS	BY H. Hidalgo	CHECKED
	QUANTITIES	BY M. Philipps	CHECKED

PREPARED FOR **TEHAMA COUNTY PUBLIC WORKS DEPARTMENT**

Michael Wolohan
PROJECT ENGINEER

BRIDGE NO. 08C-0374
POST MILES X

SACRAMENTO RIVER BRIDGE AT JELLYS FERRY ROAD
HINGE DETAILS NO. 2

DESIGN DETAIL SHEET (ENGLISH) (REV. 03/14/12)

ORIGINAL SCALE IN INCHES FOR REDUCED PLANS 0 1 2 3

UNIT: X
PROJECT NUMBER & PHASE: X
CONTRACT NO.: X

DISREGARD PRINTS BEARING EARLIER REVISION DATES

REVISION DATES X

SHEET 24 OF 33

FILE => t:\sacramento\legacy\prj_file\710054 - jellys ferry bridge\500_engineering\520_structures\521_cadd\054JF_dgn\054JF-n-hingedt02.dgn

DIST	COUNTY	ROUTE	POST MILES TOTAL PROJECT	SHEET No	TOTAL SHEETS
02	TEH	CR		106	138

REGISTERED CIVIL ENGINEER DATE

PLANS APPROVAL DATE

REGISTERED PROFESSIONAL ENGINEER Michael Wolohan No. 67743 Exp. 6/30/15 CIVIL STATE OF CALIFORNIA

T. Y. Lin International or its officers or agents shall not be responsible for the accuracy or completeness of scanned copies of this plan sheet.

T·Y·LIN INTERNATIONAL
1601 Response Road, Suite 260
SACRAMENTO, CA 95815

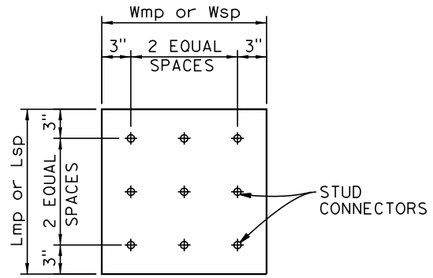

SOLE PLATE/MASONRY PLATE

NO SCALE

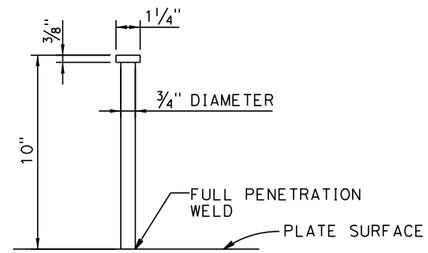

STUD CONNECTOR

No Scale

EXPANSION BEARING TABLE

LOCATION	MAXIMUM VERTICAL LOAD (kips)	MINIMUM DEAD LOAD (kips)	DESIGN ROTATION (Radians)	CONCAVE PLATE						CONVEX PLATE		MASONRY PLATE			SOLE PLATE			ASSEMBLY HEIGHT
				WIDTH / LENGTH	FLAT PTFE AREA (in^2)	DIAMETER	SPHERICAL RADIUS	MINIMUM THICKNESS	MAXIMUM THICKNESS	DIAMETER	MAXIMUM THICKNESS	WIDTH	LENGTH	THICKNESS	WIDTH	LENGTH	THICKNESS	
				L_{cp}	A_{PTFE}	D_m	R_{act}	T_{Min}	T_{Max}	C_m	H_{act}	W_{mp}	L_{mp}	T_{mp}	W_{sp}	L_{sp}	T_{sp}	A_h
Abut 1	397.9	272.0	0.035	13.25	113.75	12.125	26.375	0.75	1.675	14.00	1.696	17.00	17.00	1.25	22.00	36.00	2.25	6.01
HINGE	385.2	268.3	0.035	13.00	110.10	11.875	25.875	0.75	1.75	13.625	1.663	17.00	17.00	1.25	22.00	44.00	2.00	5.73
Abut 7	273.7	162.4	0.035	11.125	78.25	10.00	21.75	0.75	1.625	11.50	1.524	17.00	17.00	1.375	22.00	36.00	2.125	5.84

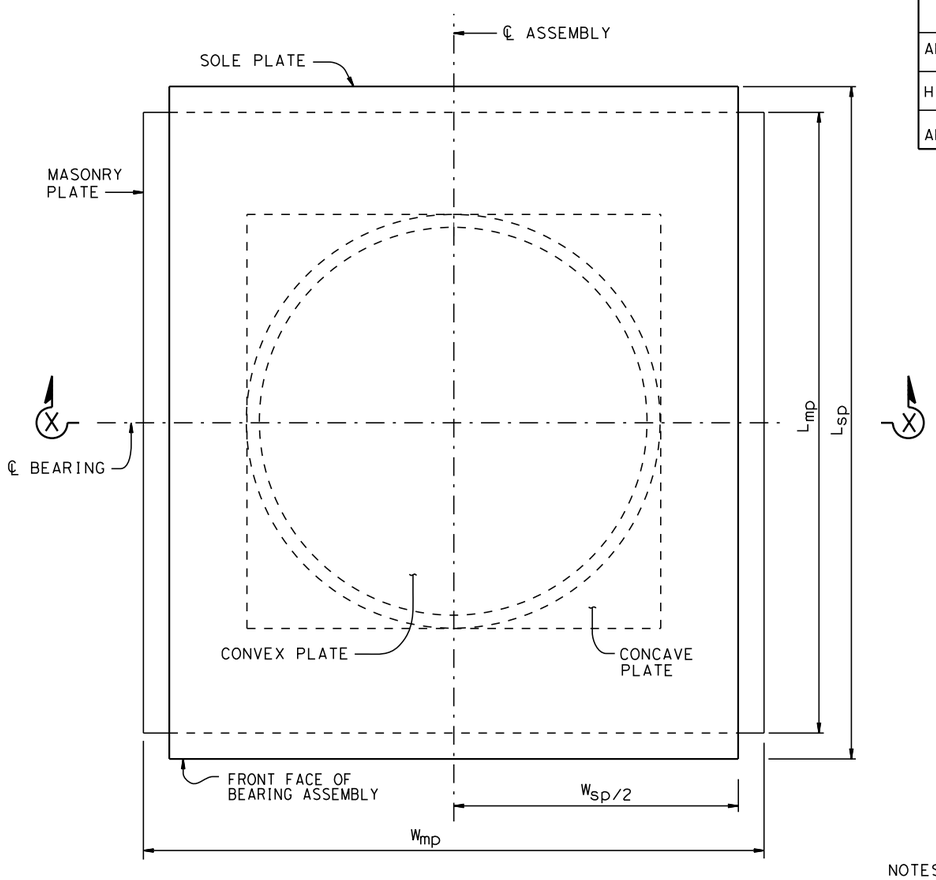

PLAN

NO SCALE

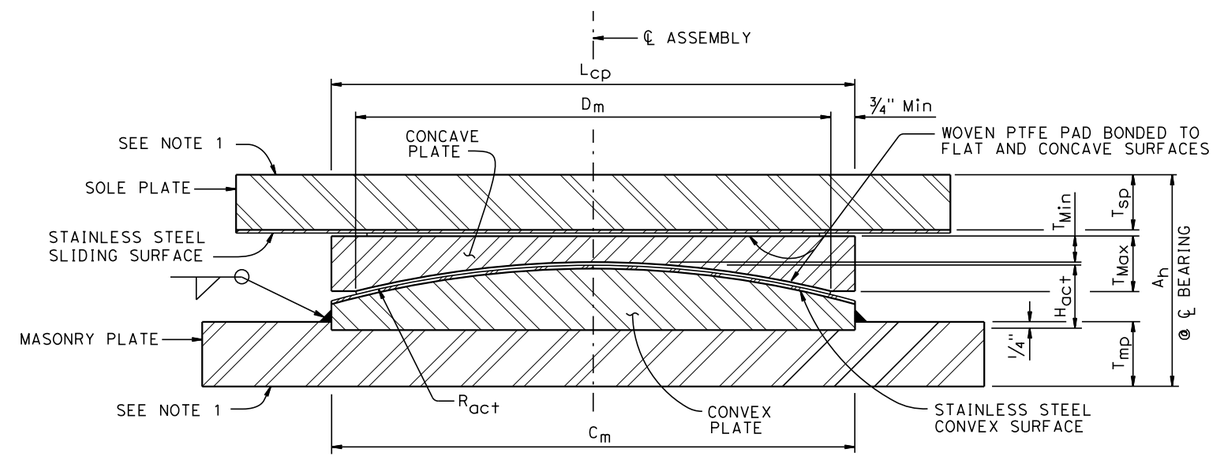

SECTION X-X

NO SCALE

NOTES:

1. Anchorage method not shown
2. All units in inches unless otherwise noted
3. All dimensions shown are steel only unless otherwise noted
4. H_{act} includes stainless steel
5. A_h includes PTFE, substratum and stainless steel, (varies)
6. R_{act} is to sliding surface

65% SUBMITTAL, NOT FOR CONSTRUCTION

USERNAME => nhidalgo DATE PLOTTED => 3/20/2015 TIME PLOTTED => 1:50:43 PM

X DESIGN OVERSIGHT		DESIGN	BY M. Philipps	CHECKED	
X SIGN OFF DATE		DETAILS	BY H. Hidalgo	CHECKED	
		QUANTITIES	BY M. Philipps	CHECKED	

PREPARED FOR **TEHAMA COUNTY PUBLIC WORKS DEPARTMENT**

Michael Wolohan — PROJECT ENGINEER

BRIDGE NO. 08C-0374 | POST MILES X

SACRAMENTO RIVER BRIDGE AT JELLYS FERRY ROAD

PTFE/SPHERICAL EXPANSION BEARING DETAILS

DESIGN DETAIL SHEET (ENGLISH) (REV. 03/14/12)

ORIGINAL SCALE IN INCHES FOR REDUCED PLANS 0 1 2 3

UNIT: X
PROJECT NUMBER & PHASE: X CONTRACT NO.: X

DISREGARD PRINTS BEARING EARLIER REVISION DATES → REVISION DATES X

SHEET 25 OF 33

FILE => t:\sacramento\legacy\pri_file\710054 - jellys ferry bridge\500_engineering\520_structures\521_cadd\054JF_dgn\054JF-g-01xs9-010_PTFE_Brg.dgn

DIST	COUNTY	ROUTE	POST MILES TOTAL PROJECT	SHEET No	TOTAL SHEETS
02	TEH	CR		107	138

REGISTERED CIVIL ENGINEER DATE

PLANS APPROVAL DATE

REGISTERED PROFESSIONAL ENGINEER Michael Wolohan No. 67743 Exp. 6/30/15 CIVIL STATE OF CALIFORNIA

T. Y. Lin International or its officers or agents shall not be responsible for the accuracy or completeness of scanned copies of this plan sheet.

T·Y·LIN INTERNATIONAL
1601 Response Road, Suite 260
SACRAMENTO, CA 95815

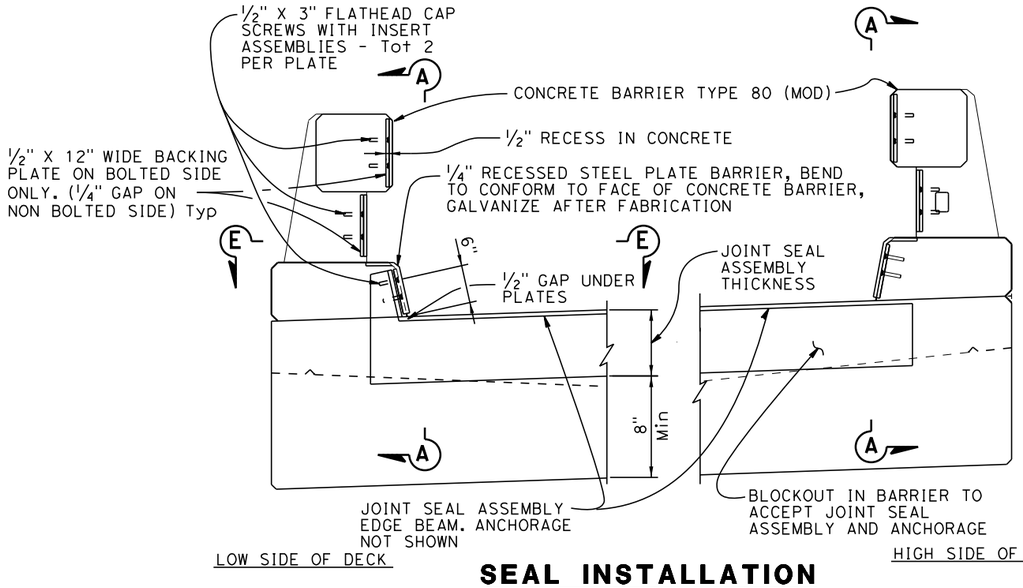

SEAL INSTALLATION
1"=1'-0"

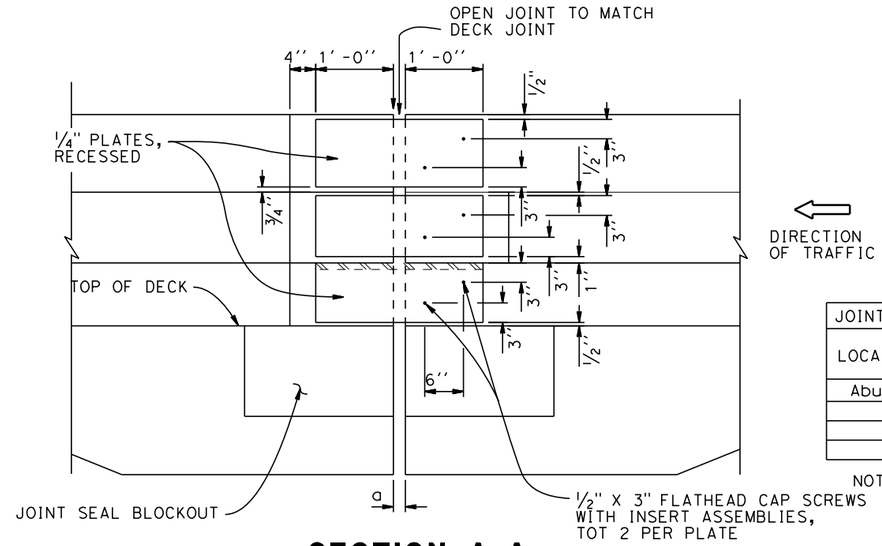

SECTION A-A
NO SCALE
NOTE: BARRIER TYPE 80 SHOWN

JOINT INFORMATION		"A" DIMENSIONS			
LOCATION	MOVEMENT RATING (M.R.)	SKEW	WINTER	SPRING & FALL	SUMMER
Abut 1	6"	0°	2¾"	2¼"	1½"

NOTE: FOR DETAILS NOT SHOWN, SEE BRIDGE PLANS

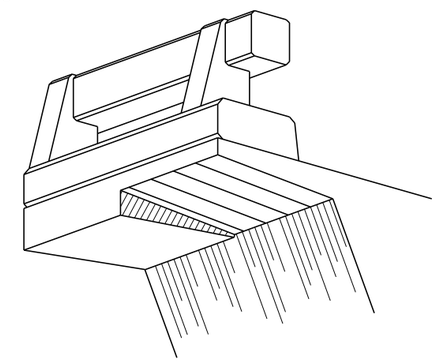

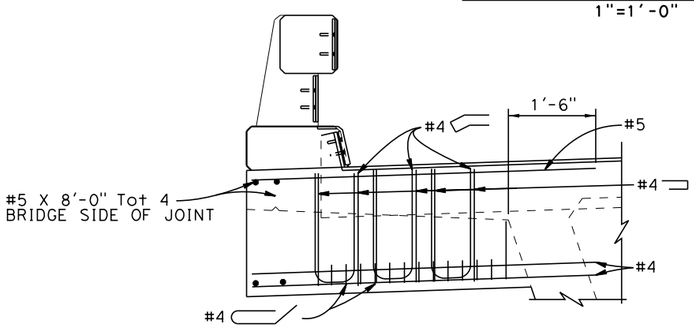

SECTION B-B
¾"=1'-0"

REINFORCEMENT SHOWN IS IN ADDITION TO SLAB REINFORCEMENT

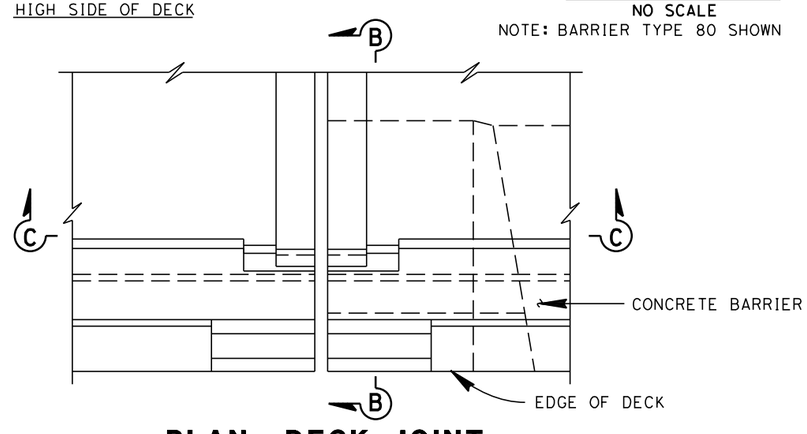

PLAN- DECK JOINT
¾"=1'-0"

DECK OVERHANG AT ABUTMENT
NO SCALE

NOTES:
1. For details not shown, see "PROJECT PLANS".
2. Abutment 1 details shown, Abutment 7 similar.
3. For details of Abutment 7 Joint Seal Assembly, see "ABUTMENT 7 STRIP JOINT SEAL ASSEMBLY DETAILS" sheet.

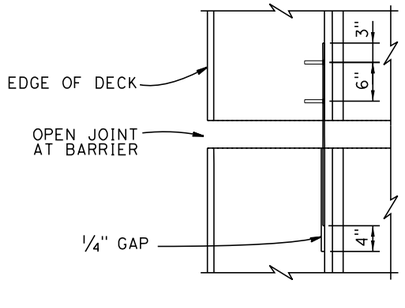

SECTION E-E
NO SCALE

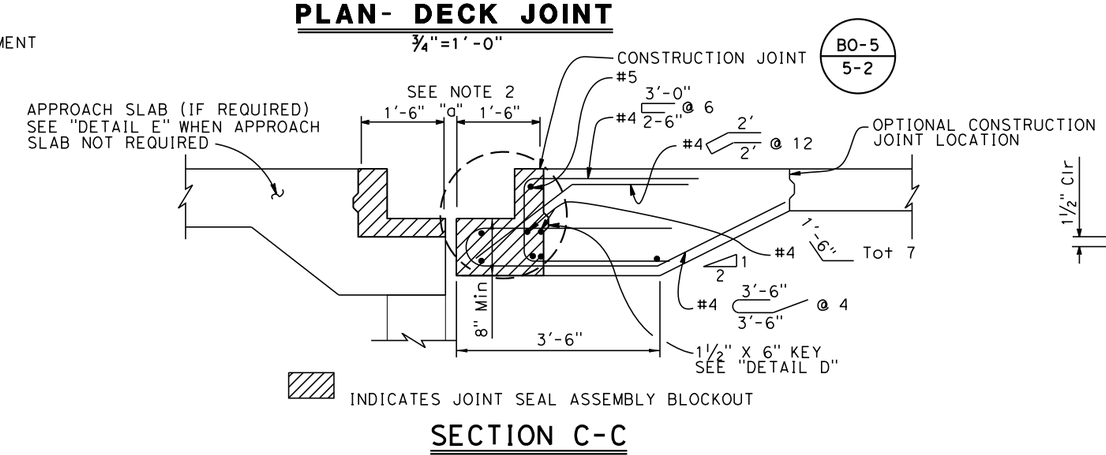

SECTION C-C
¾" = 1'-0"

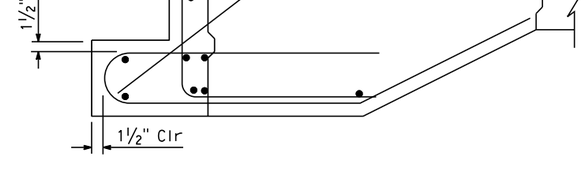

DETAIL D
1" = 1'-0"

65% SUBMITTAL, NOT FOR CONSTRUCTION

X DESIGN OVERSIGHT	DESIGN	BY M. Philipps	CHECKED	PREPARED FOR TEHAMA COUNTY PUBLIC WORKS DEPARTMENT	Michael Wolohan PROJECT ENGINEER
X SIGN OFF DATE	DETAILS	BY H. Hidalgo	CHECKED		
	QUANTITIES	BY M. Philipps	CHECKED		

BRIDGE NO. 08C-0374 | POST MILES X

SACRAMENTO RIVER BRIDGE AT JELLYS FERRY ROAD
ABUTMENT 1 JOINT SEAL ASSEMBLY DETAILS

DESIGN DETAIL SHEET (ENGLISH) (REV. 03/14/12)

ORIGINAL SCALE IN INCHES FOR REDUCED PLANS 0 1 2 3

UNIT: X
PROJECT NUMBER & PHASE: X
CONTRACT NO.: X

DISREGARD PRINTS BEARING EARLIER REVISION DATES

REVISION DATES X

SHEET 26 OF 33

USERNAME => hhidalgo DATE PLOTTED => 3/20/2015 TIME PLOTTED => 1:50:45 PM

FILE => t:\sacramento\legacy\pri_file\710054 - jellys ferry bridge\500_engineering\520_structures\521_cadd\054JF_dgn\054JF-g-02xs8-030_Joint_Seal.dgn

DIST	COUNTY	ROUTE	POST MILES TOTAL PROJECT	SHEET No.	TOTAL SHEETS
02	TEH	CR		108	138

REGISTERED CIVIL ENGINEER DATE

PLANS APPROVAL DATE

The State of California or its officers or agents shall not be responsible for the accuracy or completeness of electronic copies of this plan sheet.

REGISTERED PROFESSIONAL ENGINEER Michael Wolohan No. 67743 Exp. 6/30/15 CIVIL STATE OF CALIFORNIA

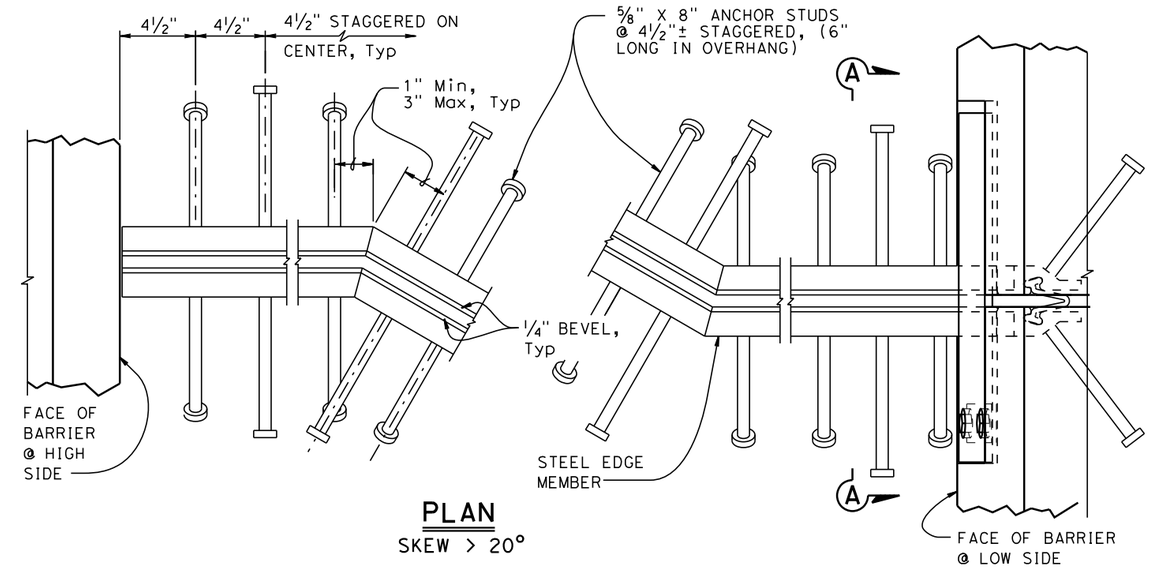

PLAN
SKEW > 20°

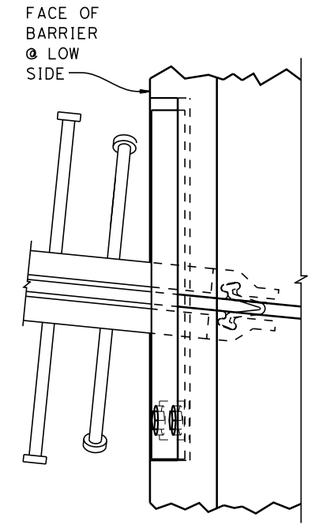

PLAN
SKEW ≤ 20°

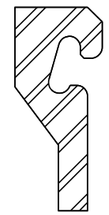

SCHEMATIC STEEL EDGE MEMBER

NOTES:

1. Alternatively, fillet or complete penetration welds may be used at anchor studs.
2. Alternate types of anchor studs may be permitted subject to the authorization by the Engineer.
3. Joint seal assembly to be used in conjunction with closure pour. (See other sheets for limits). Closure pour shall not be placed until final deck surface is within the tolerances specified.
4. Use joint at crown of roadway, at any change in traverse slope in deck and at changes in horizontal direction. Place other joints at or near lanes. All metal parts to be painted or galvanized after fabrication.
5. Sheet Neoprene shall be fabricated in one continuous piece and shall be fabricated to bend around corners. Field splices of the neoprene are not allowed.
6. Insert assembly or expansion anchorage for 5/8" x 1¾" bolts. Use installation bolts extended ½" minimum past nut and coat with bond breaker, after concrete has cured, remove installation bolts, install HS bolts and sheet neoprene.
7. Sidewalk Detail similar to Barrier Detail on low side at both sides if the roadway is crowned or if the difference in elevation between the ends of the seal is 0.5′ or less.
8. a_c, a_s, are the thermal expansion coefficients for concrete and steel respectively.
9. Anchor studs shall conform to ASTM 108.

JOINT INFORMATION			"a" DIMENSIONS		
LOCATION	MOVEMENT RATING (MR)	SKEW	WINTER	SPRING & FALL	SUMMER
Abut 7	4"	0°	2¼"	1¾"	1¼"

1

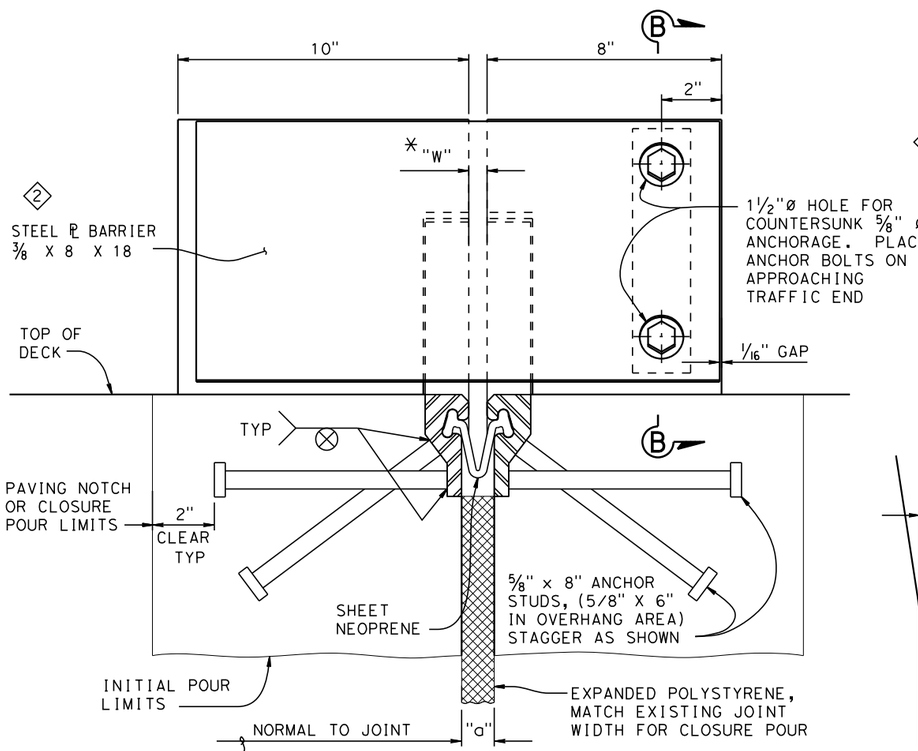

SECTION A-A

* TO SET MINIMUM JOINT OPENING "W"

$$\text{"W"} = \begin{cases} \tfrac{1}{2}\text{"} + [(\text{Max Str temperature in °F}) - (\text{actual Str temperature in °F})] * (a_c \text{ or } a_s)(12)(\text{contributory L in feet}) \\ \tfrac{1}{2}\text{" Minimum} \\ a_c = 0.0000060 \\ a_s = 0.0000065 \end{cases}$$

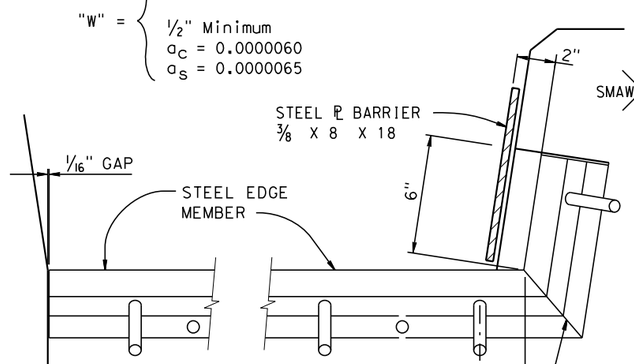

BARRIER DETAIL HIGH SIDE

BARRIER DETAIL LOW SIDE 2

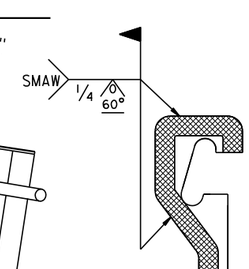

SCHEMATIC FIELD WELD DETAIL

NOTE:
SHADED AREAS TO BE WELDED

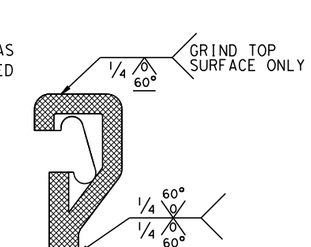

SCHEMATIC SHOP WELD DETAIL

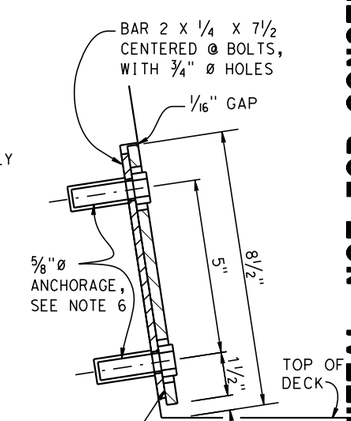

SECTION B-B 2

NO SCALE

65% SUBMITTAL, NOT FOR CONSTRUCTION

STANDARD DRAWING		
FILE NO. xs8-010	APPROVAL DATE July 2014	1 MODIFIED TABLE 2 MODIFIED DETAIL

STATE OF CALIFORNIA DEPARTMENT OF TRANSPORTATION

DIVISION OF ENGINEERING SERVICES

BRIDGE NO. 08C-0374

POST MILE

SACRAMENTO RIVER BRIDGE AT JELLYS FERRY ROAD

STRIP JOINT SEAL ASSEMBLY

MAXIMUM MOVEMENT RATING = 4"

DS OSD 2147A (ENGLISH STANDARD DRAWING "XS" BORDER REV. (02-02-11)

ORIGINAL SCALE IN INCHES FOR REDUCED PLANS 0 1 2 3

UNIT: X
PROJECT NUMBER & PHASE: X
CONTRACT NO.: X

DISREGARD PRINTS BEARING EARLIER REVISION DATES

REVISION DATES 6-23-14

SHEET 27 OF 33

FILE => t:\sacramento\legacy\pri_file\710054 - jellys ferry bridge\500_engineering\520_structures\521_cadd\054JF_dgn\054jF-g-03xs08-810.dgn

USERNAME => nhidalgo DATE PLOTTED => 3/20/2015 TIME PLOTTED => 1:50:48 PM

DIST	COUNTY	ROUTE	POST MILES TOTAL PROJECT	SHEET No	TOTAL SHEETS
02	TEH	CR		109	138

REGISTERED CIVIL ENGINEER DATE

PLANS APPROVAL DATE

REGISTERED PROFESSIONAL ENGINEER
Michael Wolohan
No. 67743
Exp. 6/30/15
CIVIL
STATE OF CALIFORNIA

T. Y. Lin International or its officers or agents shall not be responsible for the accuracy or completeness of scanned copies of this plan sheet.

T·Y·LIN INTERNATIONAL
1601 Response Road, Suite 260
SACRAMENTO, CA 95815

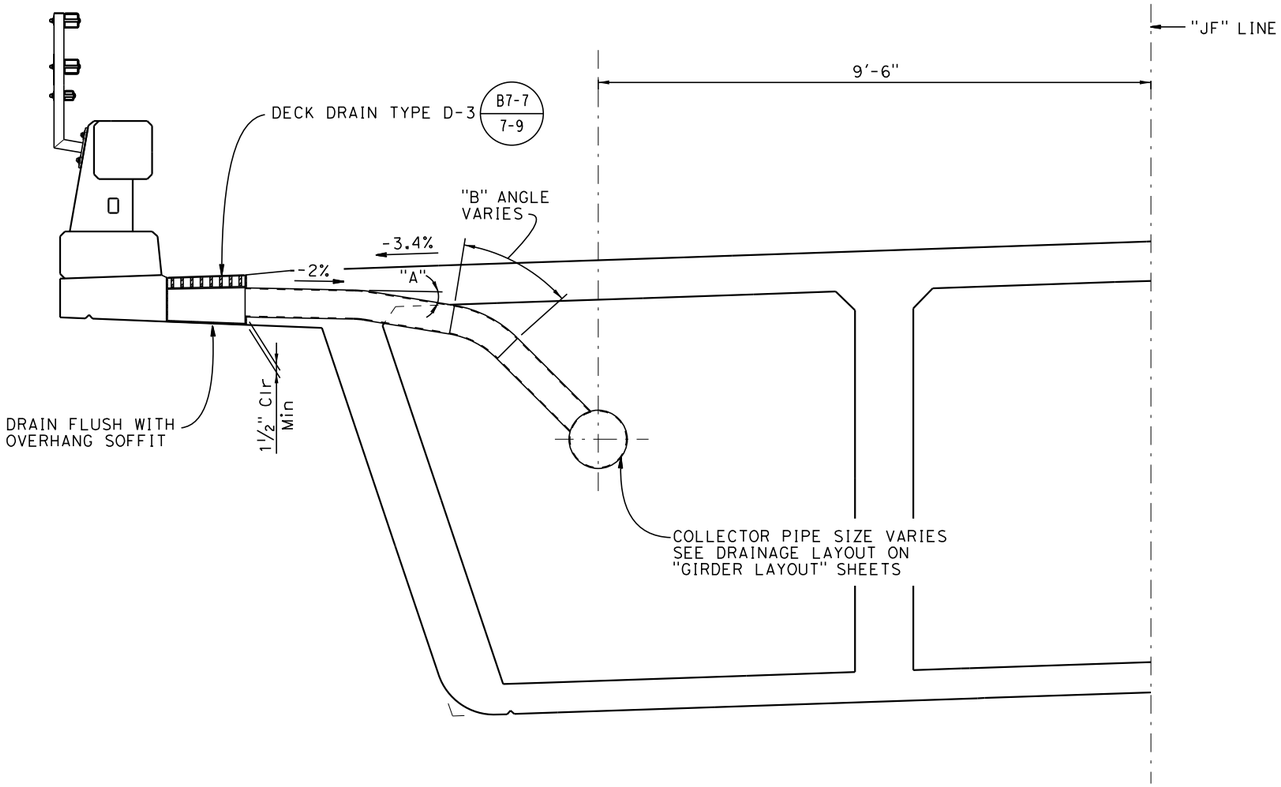

TYPICAL SECTION AT DRAINAGE INLET

¾"=1'-0"

NOTES:

1. All pipes to be per plan of welded steel pipe as noted and galvanized.
2. Fittings and bends shall have a minimun wall thickness of ⅛".
3. All NPSX pipe bends to be 18" minimum radius for 6"Ø, and 36" for 12"Ø pipe measured along centerline pipe.
4. All joints or connections to be butt-weled or connected by a steel pipe sleeve and to be smooth throughout inside of pipe except as noted.
5. All bends to be smooth, and pipes not encased in concrete to be supported by suitable galvanized hangers at 10'-0" maximum spacing thoughout.
6. Galvanize deck drain assembly after fabrication.
7. Angle "A" is 11°15'00".

65% SUBMITTAL, NOT FOR CONSTRUCTION

X
DESIGN OVERSIGHT
X
SIGN OFF DATE

	BY	CHECKED
DESIGN	M. Philipps	
DETAILS	H. Hidalgo	
QUANTITIES	M. Philipps	

PREPARED FOR
TEHAMA COUNTY
PUBLIC WORKS DEPARTMENT

Michael Wolohan
PROJECT ENGINEER

BRIDGE NO. 08C-0374
POST MILES X

SACRAMENTO RIVER BRIDGE AT JELLYS FERRY ROAD
DECK DRAINAGE DETAILS

DESIGN DETAIL SHEET (ENGLISH) (REV. 03/14/12)

ORIGINAL SCALE IN INCHES FOR REDUCED PLANS 0 1 2 3

UNIT: X
PROJECT NUMBER & PHASE: X
CONTRACT NO.: X

DISREGARD PRINTS BEARING EARLIER REVISION DATES

REVISION DATES X

SHEET 28 OF 33

FILE => t:\sacramento\legacy\proj_file\710054 - jellys ferry bridge\500_engineering\520_structures\521_cadd\054JF_dgn\054JF-r-dd01.dgn

USERNAME => hhidalgo DATE PLOTTED => 3/20/2015 TIME PLOTTED => 11:50:50 PM

DIST	COUNTY	ROUTE	POST MILES TOTAL PROJECT	SHEET NO.	TOTAL SHEETS
02	TEH	CR		110	138

REGISTERED CIVIL ENGINEER DATE

PLANS APPROVAL DATE

REGISTERED PROFESSIONAL ENGINEER Michael Wolohan No. 67743 Exp. 6/30/15 CIVIL STATE OF CALIFORNIA

The State of California or its officers or agents shall not be responsible for the accuracy or completeness of electronic copies of this plan sheet.

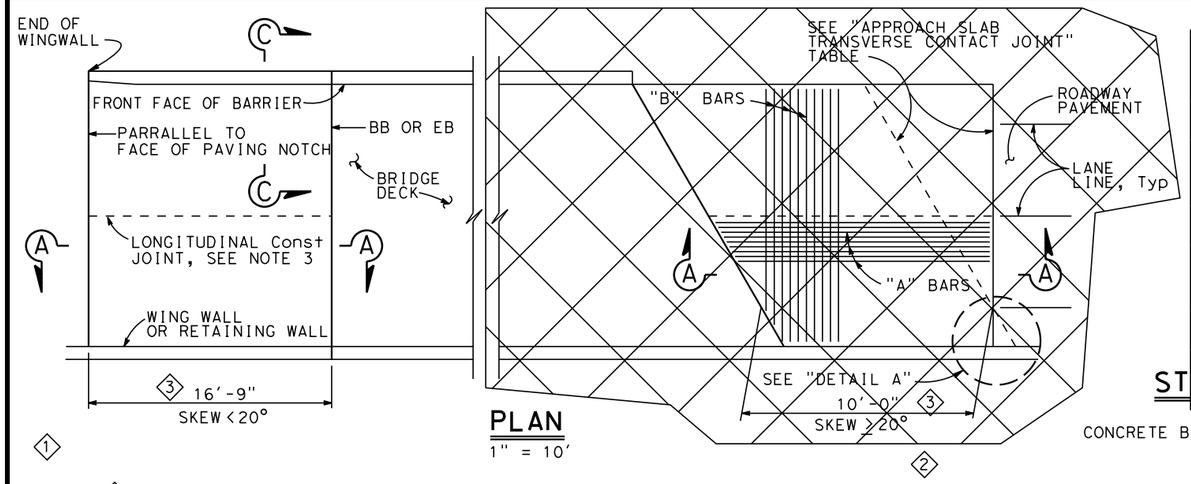

PLAN

1" = 10'

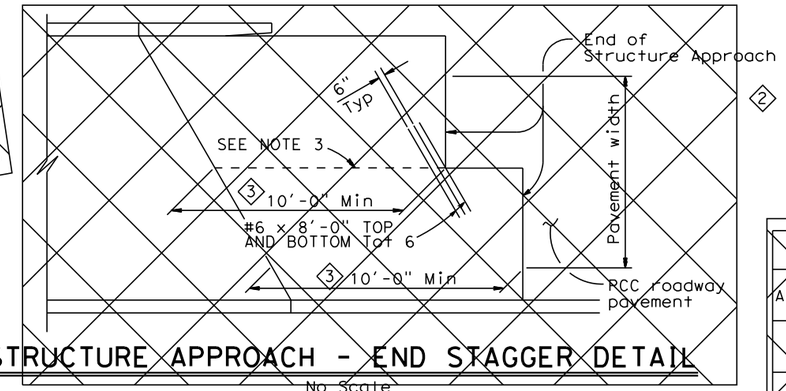

STRUCTURE APPROACH - END STAGGER DETAIL

No Scale

APPROACH SLAB TRANSVERSE CONTACT JOINT		
APPROACH SKEW	WITH AC ROADWAY PAVEMENT	WITH PCC ROADWAY PAVEMENT
< 20°	PARALLEL TO FACE OF PN	PARALLEL TO FACE OF PN
20° - 45°	PARALLEL TO FACE OF PN USE "DETAIL A"	STAGGER LINES 24' TO 36' APART
> 45°	PARALLEL TO FACE OF PN USE "DETAIL A"	STAGGER AT EACH LANE LINE

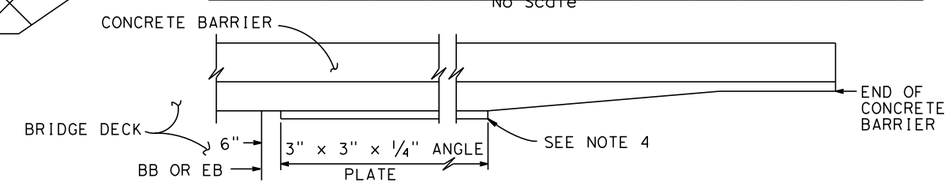

EDGE ANGLE DETAIL

½"=1'-0"

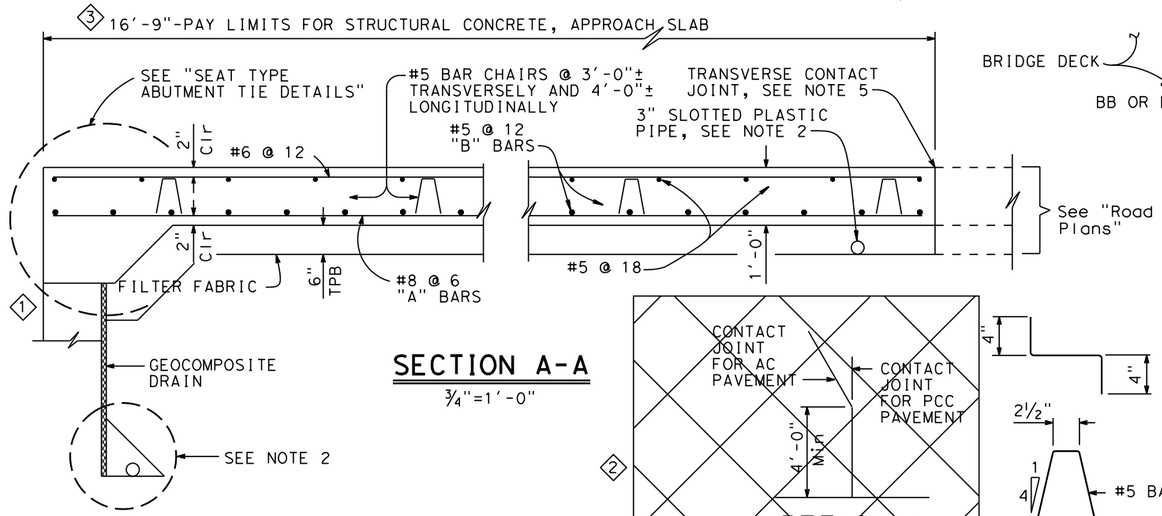

SECTION A-A

¾"=1'-0"

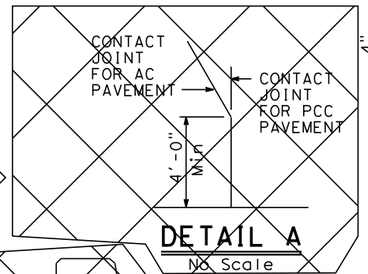

DETAIL A

No Scale

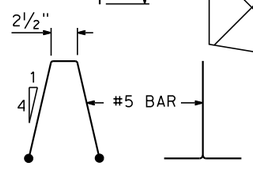

BAR CHAIR DETAIL

1½"=1'-0"

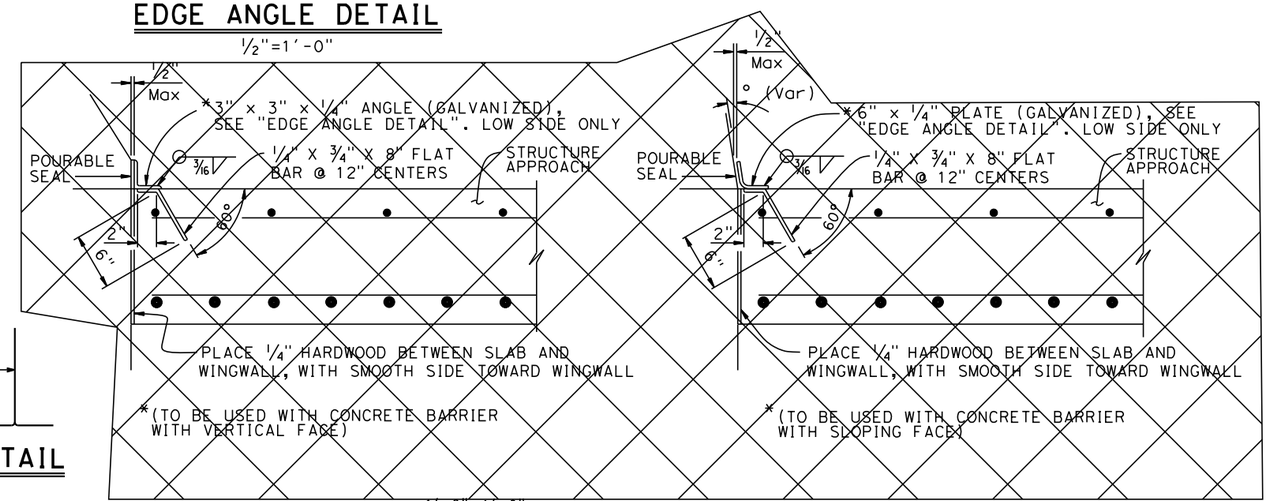

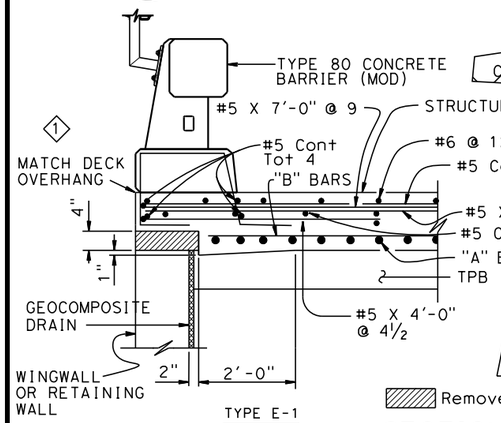

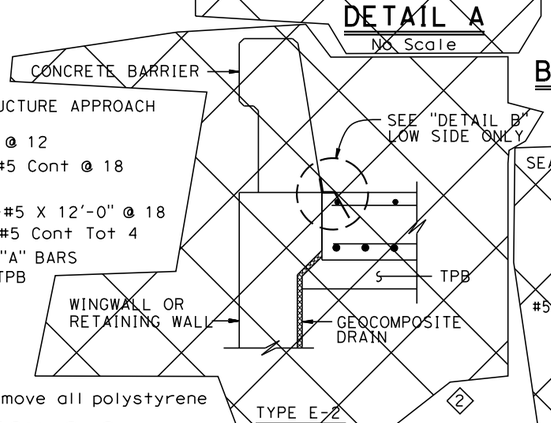

Remove all polystyrene

SECTION C-C

¾"=1'-0"

(Type E-1 to be used, unless otherwise shown on plans)

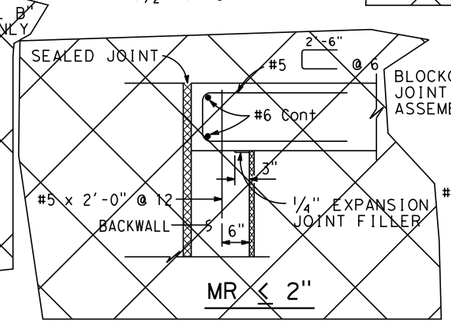

MR ≤ 2"

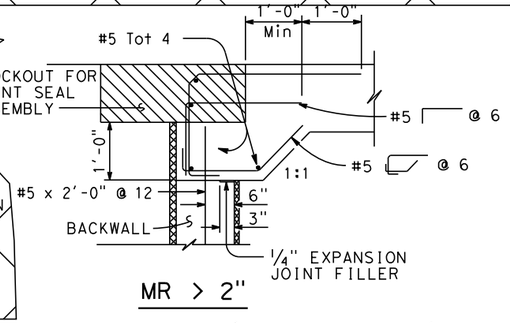

MR > 2"

SEAT TYPE ABUTMENT TIE DETAILS (SEE NOTE 1)

¾"=1'-0"

NOTES:

1. For details not shown, see Structure Plans. For MR ≤ 2", adjust bar reinforcement to clear a sawcut for sealed joint, when required
2. For drainage details, see "STRUCTURE APPROACH DRAINAGE DETAILS" sheet
3. Longitudinal construction joints, when permitted by the Engineer, shall be located on lane lines
4. End angle or plate at beginning of barrier transition, end of wingwall or end of structure approach as applicable
5. For transverse contact joint with new PCC paving, refer to Standard Plan P10
6. At the Contractor's option, approach slab transverse reinforcement may be placed parallel to paving notch. Spacing of transverse reinforcement is measured along ℄ roadway

65% SUBMITTAL, NOT FOR CONSTRUCTION

USERNAME => phidalgo DATE PLOTTED => 3/20/2015 TIME PLOTTED => 1:50:52 PM

STANDARD DRAWING

FILE NO. xs3-120

APPROVAL DATE July 2011

1 Detail Modified
2 Detail not part of contract
3 Dimensions Modified

PREPARED FOR TEHAMA COUNTY PUBLIC WORKS DEPARTMENT

DIVISION OF ENGINEERING SERVICES

BRIDGE NO. 08C-0374

POST MILE

SACRAMENTO RIVER BRIDGE AT JELLYS FERRY ROAD

STRUCTURE APPROACH TYPE N(30S) (MOD)

DS OSD 2147A (ENGLISH STANDARD DRAWING "XS" BORDER REV. (02-02-11)

ORIGINAL SCALE IN INCHES FOR REDUCED PLANS 0 1 2 3

UNIT: X

PROJECT NUMBER & PHASE:

CONTRACT NO.: X

DISREGARD PRINTS BEARING EARLIER REVISION DATES

REVISION DATES

SHEET 29 OF 33

FILE => t:\sacramento\legacy\prj_file\710054 - jellys ferry bridge\500_engineering\520_structures\521_cadd\054JF_dgn\054JF-s-01xs3-120.dgn

DIST	COUNTY	ROUTE	POST MILES TOTAL PROJECT	SHEET No.	TOTAL SHEETS
02	TEH	CR		111	138

REGISTERED CIVIL ENGINEER DATE

PLANS APPROVAL DATE

REGISTERED PROFESSIONAL ENGINEER Michael Wolohan No. 67743 Exp. 6/30/15 CIVIL STATE OF CALIFORNIA

The State of California or its officers or agents shall not be responsible for the accuracy or completeness of electronic copies of this plan sheet.

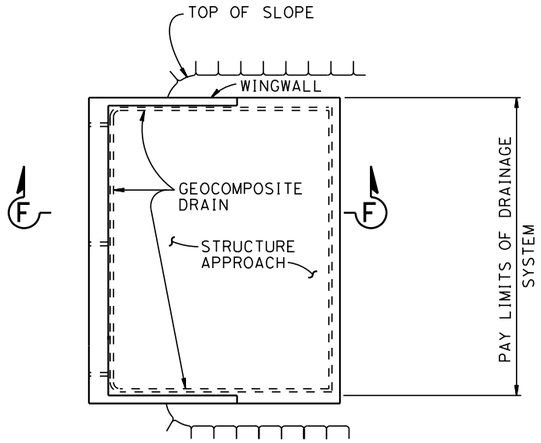

TYPICAL PLAN

1" = 10'

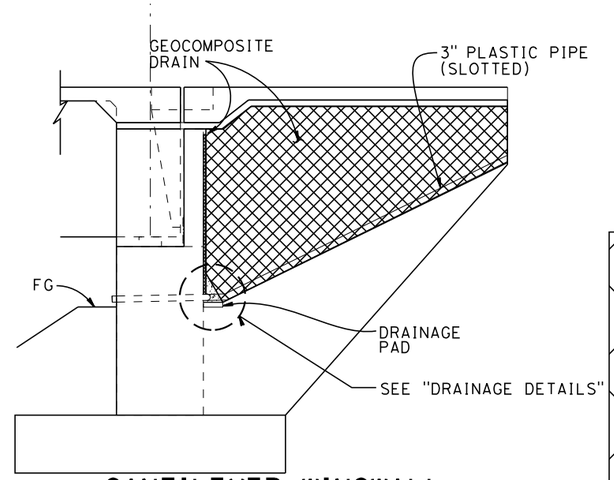

CANTILEVER WINGWALL SECTION F-F

NO SCALE

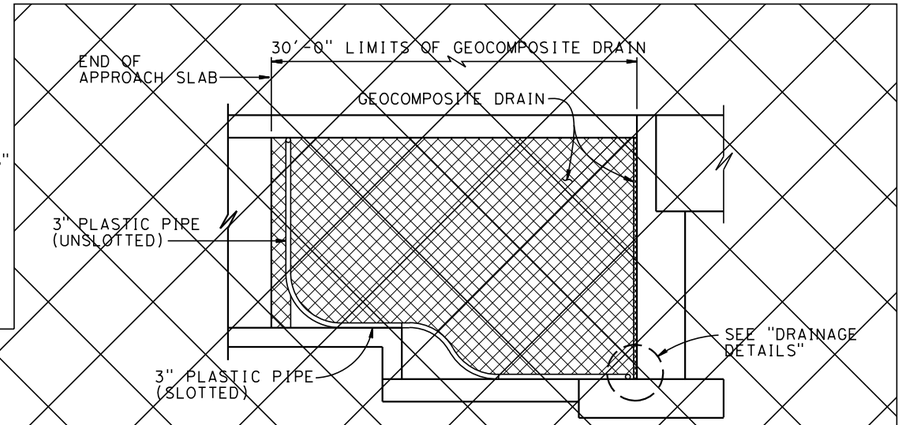

RETAINING WALL WINGWALL DRAINAGE DETAILS

SECTION G-G

1/4" = 1'-0"

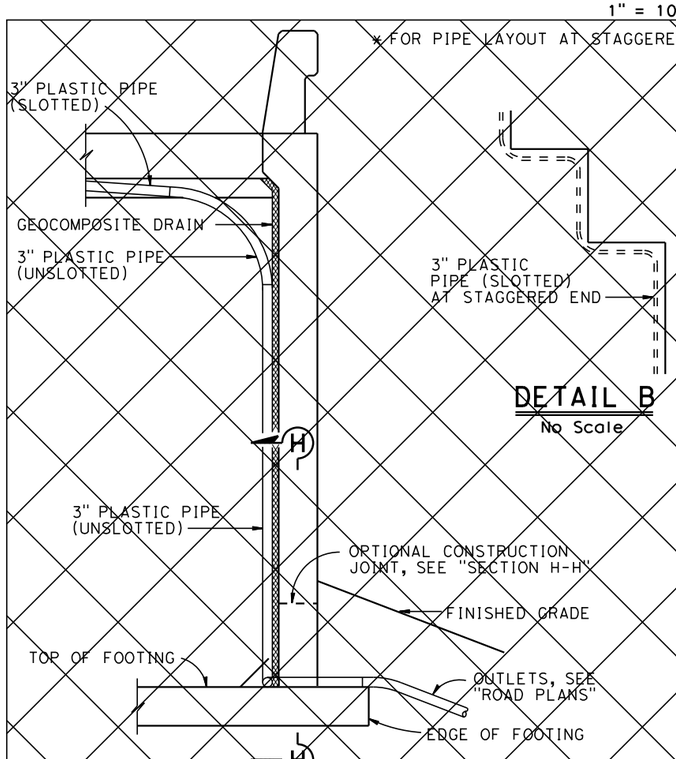

DETAIL B

No Scale

SECTION E-E

1/2" = 1'-0"

NOTE: Bends and junctions in 3" plastic pipe are 30" radius Min

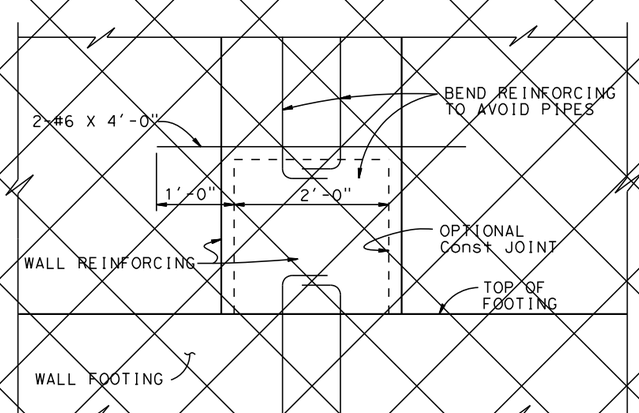

SECTION H-H

1" = 1'-0"

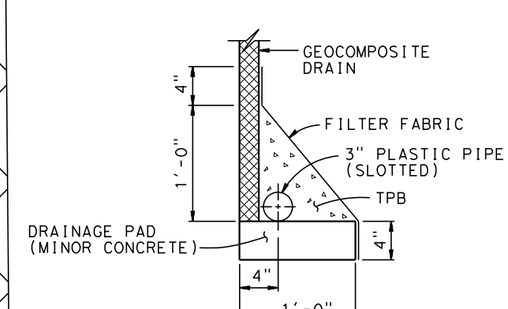

WITHOUT FOOTING

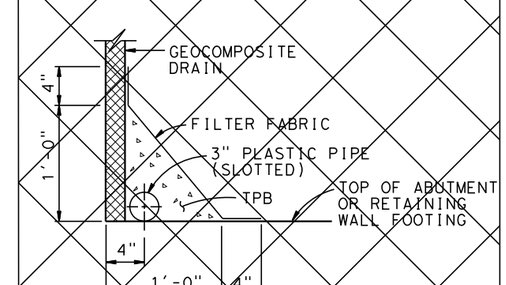

WITH FOOTING

DRAINAGE DETAILS

1 1/2" = 1'-0"

65% SUBMITTAL, NOT FOR CONSTRUCTION

STANDARD DRAWING

FILE NO. xs3-110

APPROVAL DATE July 2011

1. Detail Modified
2. Detail not part of contract
3. Dimensions Modified

PREPARED FOR TEHAMA COUNTY PUBLIC WORKS DEPARTMENT

DIVISION OF ENGINEERING SERVICES

BRIDGE NO. 08C-0374

POST MILE

SACRAMENTO RIVER BRIDGE AT JELLYS FERRY ROAD

STRUCTURE APPROACH DRAINAGE DETAILS

DS OSD 2147A (ENGLISH STANDARD DRAWING "XS" BORDER REV. (02-02-11)

ORIGINAL SCALE IN INCHES FOR REDUCED PLANS 0 1 2 3

UNIT: X

PROJECT NUMBER & PHASE: CONTRACT NO.: X

DISREGARD PRINTS BEARING EARLIER REVISION DATES

REVISION DATES

SHEET 30 OF 33

FILE => t:\sacramento\legacy\prj_file\710054 - jellys ferry bridge\500_engineering\520_structures\521_cadd\054JF_dgn\054JF-s-02xs3-110.dgn

USERNAME => nhidalgo DATE PLOTTED => 3/20/2015 TIME PLOTTED => 1:50:54 PM

DIST	COUNTY	ROUTE	POST MILES TOTAL PROJECT	SHEET No.	TOTAL SHEETS
02	TEH	CR		112	138

REGISTERED CIVIL ENGINEER DATE

PLANS APPROVAL DATE

REGISTERED PROFESSIONAL ENGINEER Michael Wolohan No. 67743 Exp. 6/30/15 CIVIL STATE OF CALIFORNIA

The State of California or its officers or agents shall not be responsible for the accuracy or completeness of electronic copies of this plan sheet.

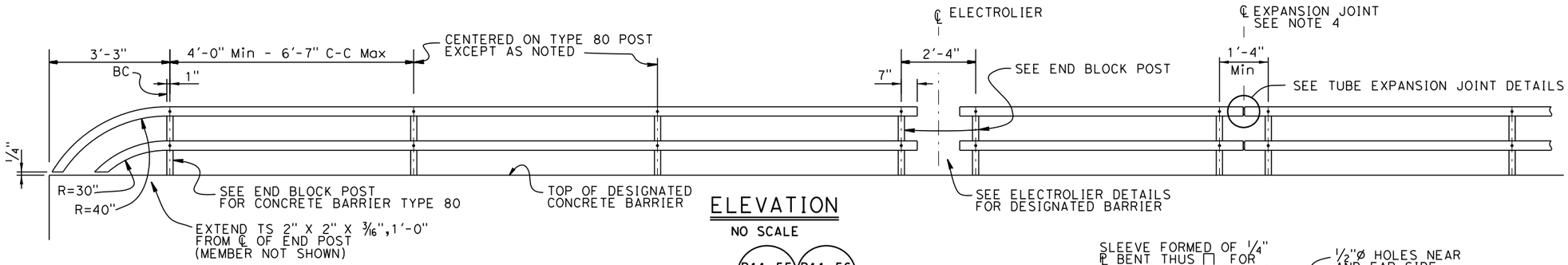

ELEVATION

NO SCALE

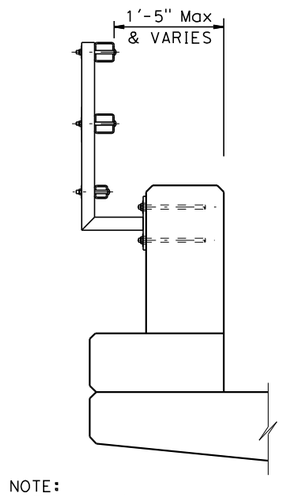

NOTE:
For details not shown, see "TYPE 732 OR 736"

TYPE 80 END BLOCK POST

1" = 1'-0"

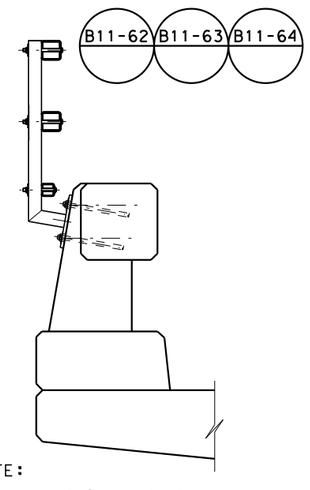

NOTE:
For details not shown, see "TYPE 732 OR 736"

TYPE 80

1" = 1'-0"

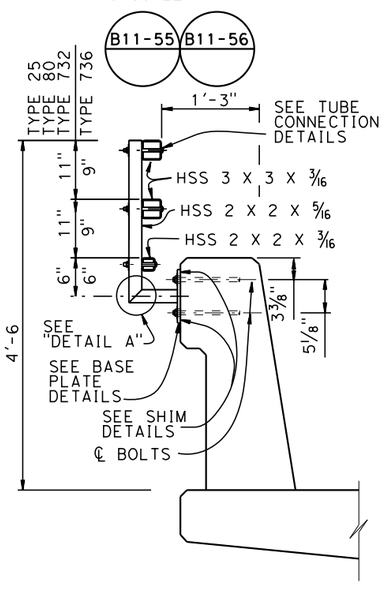

TYPE 732 OR 736

1" = 1'-0"

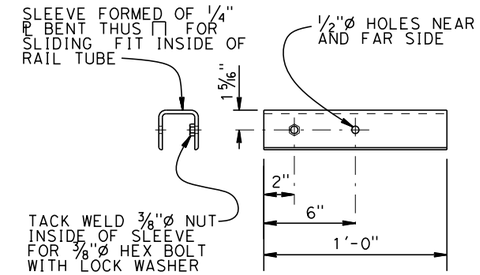

SLEEVE DETAIL

NO SCALE

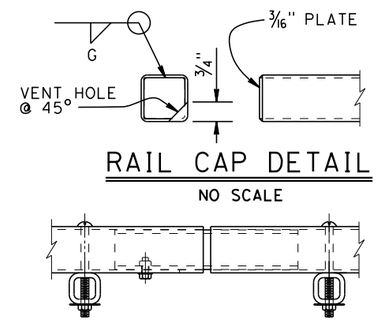

RAIL CAP DETAIL

NO SCALE

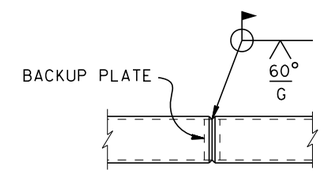

WELDED SPLICE DETAIL

NO SCALE

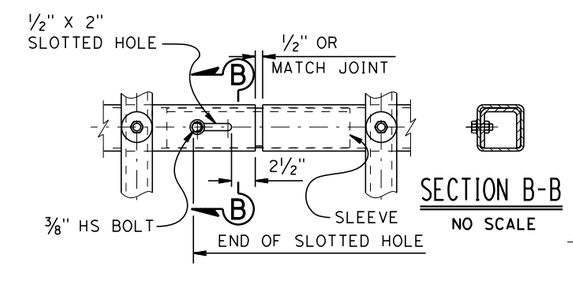

TUBE EXPANSION JOINT DETAILS

NO SCALE

SECTION B-B

NO SCALE

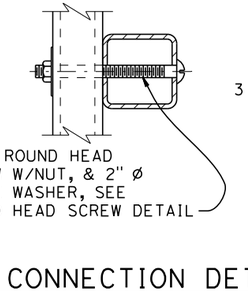

TUBE CONNECTION DETAIL

NO SCALE

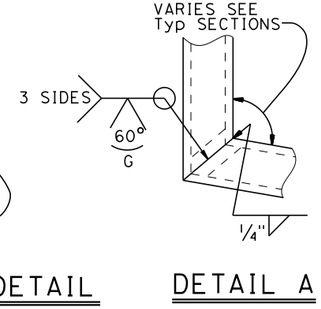

DETAIL A

NO SCALE

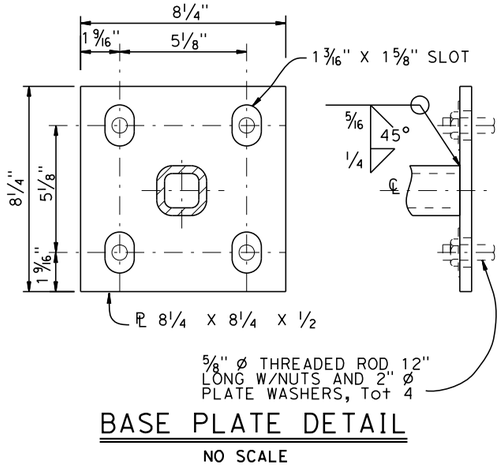

BASE PLATE DETAIL

NO SCALE

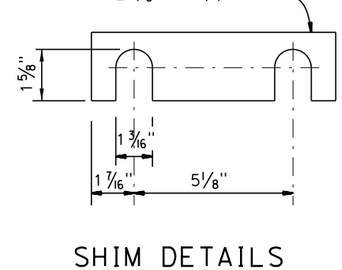

SHIM DETAILS

NO SCALE

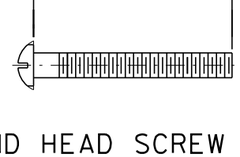

ROUND HEAD SCREW DETAIL

NO SCALE

NOTES:

1. Post shall be normal to railing.
2. Rail tubes shall be shop bent or fabricated to fit horizontal curve when radius is less than 12".
3. Tube expansion joints shall be located in the tubes spanning deck or wall joints. Increase joint width in tubes to match expansion joint width and increase sleeve length correspondingly.
4. Top rail tube shall be continuous over not less than two posts except a short post spacing is permitted near deck or wall joints, electroliers, or other rail discontinuities as noted.
5. See Project Plans for limits of tubular hand railing.

65% SUBMITTAL, NOT FOR CONSTRUCTION

USERNAME => nhidalgo DATE PLOTTED => 3/20/2015 TIME PLOTTED => 1:50:56 PM

STANDARD DRAWING

FILE NO. xs16-035

APPROVAL DATE July 2014

DS OSD 2147A (ENGLISH STANDARD DRAWING "XS" BORDER REV. (02-02-11)

ORIGINAL SCALE IN INCHES FOR REDUCED PLANS 0 1 2 3

STATE OF CALIFORNIA DEPARTMENT OF TRANSPORTATION

DIVISION OF ENGINEERING SERVICES

BRIDGE NO. 08C-0374

POST MILE X

SACRAMENTO RIVER BRIDGE AT JELLYS FERRY ROAD

CONCRETE BARRIER TYPE 80

TUBULAR BICYCLE RAILING DETAILS

UNIT: X

PROJECT NUMBER & PHASE: X

CONTRACT NO.: X

DISREGARD PRINTS BEARING EARLIER REVISION DATES 8/1/12

REVISION DATES

SHEET 31 OF 33

FILE => t:\sacramento\legacy\prj_file\710054 - jellys ferry bridge\500_engineering\520_structures\521_cadd\054JF_dgn\054JF-t-01xs16-035.dgn

DIST	COUNTY	ROUTE	POST MILES TOTAL PROJECT	SHEET No	TOTAL SHEETS
02	TEH	CO RD		113	138

REGISTERED CIVIL ENGINEER DATE

PLANS APPROVAL DATE

REGISTERED PROFESSIONAL ENGINEER — GARY PARIKH — No. G.E. 666 — Exp. 12/31/15 — GEOTECHNICAL — STATE OF CALIFORNIA

T. Y. Lin International or its officers or agents shall not be responsible for the accuracy or completeness of scanned copies of this plan sheet.

T·Y·LIN INTERNATIONAL
1601 RESPONSE ROAD, SUITE 260
SACRAMENTO, CA 95815

PARIKH CONSULTANTS, INC.
2360 QUME DRIVE, SUITE A
SAN JOSE, CA 95131

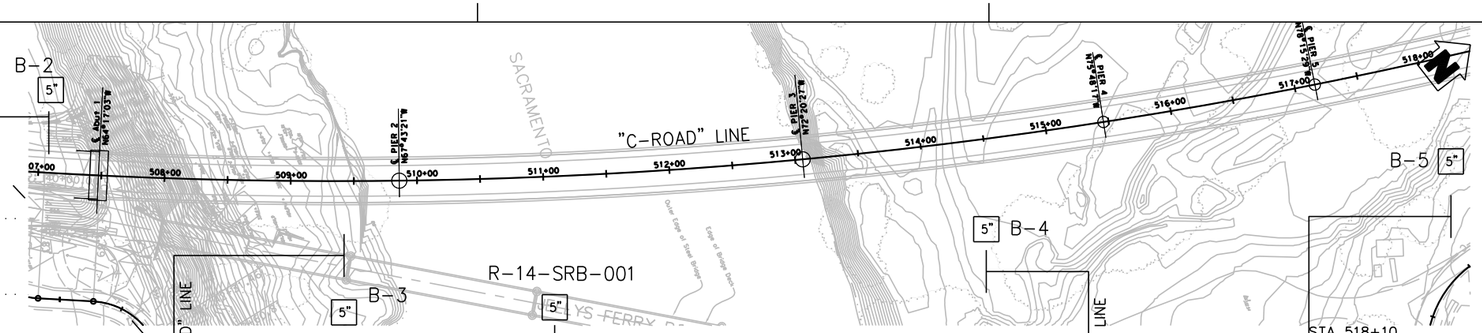

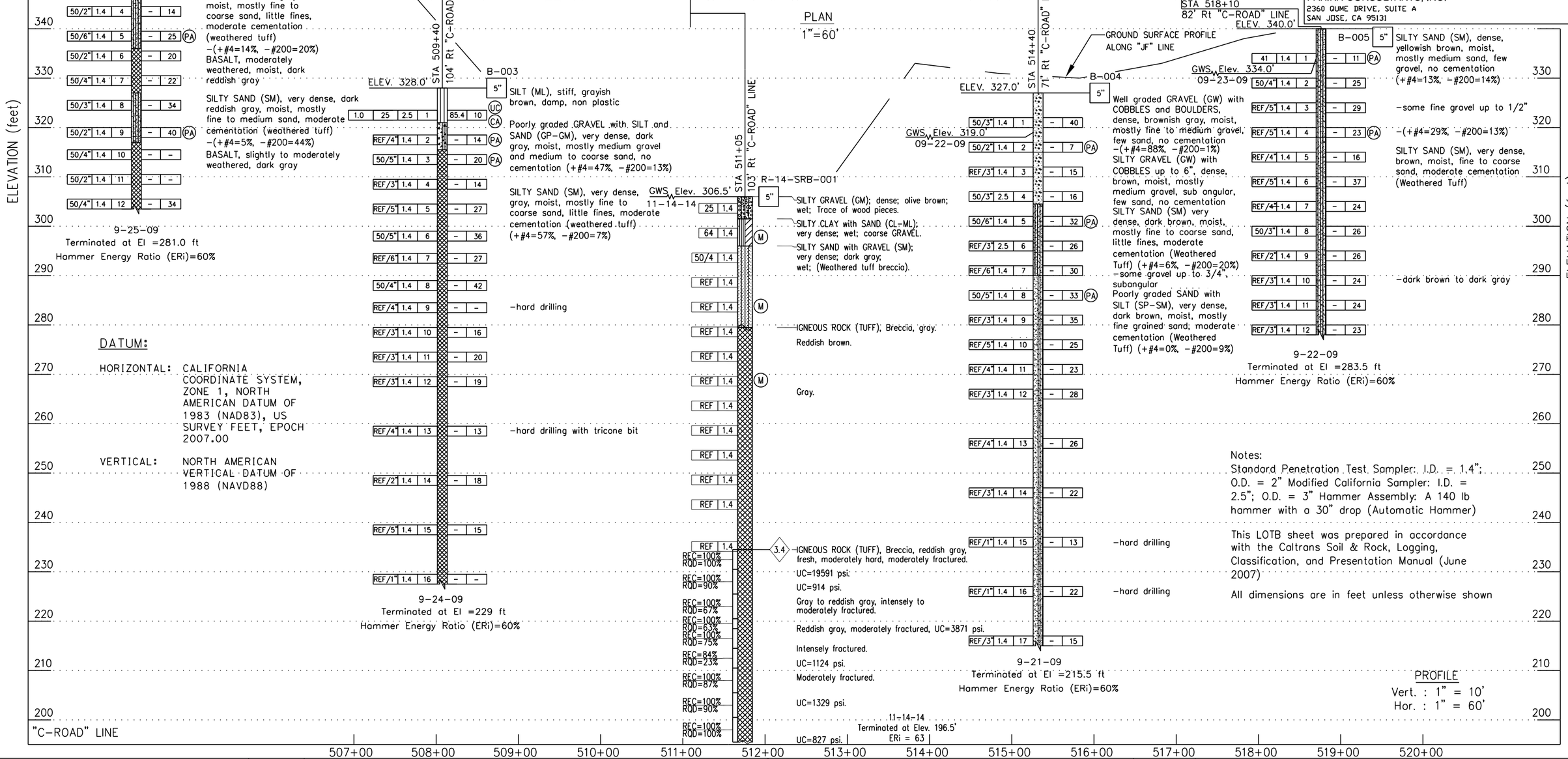

DATUM:

HORIZONTAL: CALIFORNIA COORDINATE SYSTEM, ZONE 1, NORTH AMERICAN DATUM OF 1983 (NAD83), US SURVEY FEET, EPOCH 2007.00

VERTICAL: NORTH AMERICAN VERTICAL DATUM OF 1988 (NAVD88)

Notes:
Standard Penetration Test Sampler: I.D. = 1.4"; O.D. = 2" Modified California Sampler: I.D. = 2.5"; O.D. = 3" Hammer Assembly: A 140 lb hammer with a 30" drop (Automatic Hammer)

This LOTB sheet was prepared in accordance with the Caltrans Soil & Rock, Logging, Classification, and Presentation Manual (June 2007)

All dimensions are in feet unless otherwise shown

PROFILE
Vert. : 1" = 10'
Hor. : 1" = 60'

65% SUBMITTAL, NOT FOR CONSTRUCTION

TIME PLOTTED => $TIME
DATE PLOTTED => $DATE
USERNAME => $USER

DESIGN OVERSIGHT	DRAWN BY K. OUYANG	L. BHANGOO/V. SANTOS FIELD INVESTIGATION BY:	PREPARED FOR THE TEHAMA COUNTY PUBLIC WORKS DEPARTMENT
SIGN OFF DATE	CHECKED BY EMRE ORTAKCI	DATE: SEPTEMBER 2009/NOVEMBER 2014	D. WANG PROJECT ENGINEER

BRIDGE NO. 08C-0374 — POST MILES -

SACRAMENTO RIVER BRIDGE AT JELLYS FERRY ROAD

LOG OF TEST BORINGS 1 OF 2

OGS GEOTECHNICAL LOG OF TEST BORINGS SHEET (ENGLISH) (REV. 06-01-09)

ORIGINAL SCALE IN INCHES FOR REDUCED PLANS 0 1 2 3

CU - EA -

DISREGARD PRINTS BEARING EARLIER REVISION DATES

REVISION DATES: ? 2/9/10

SHEET 32 OF 33

FILE => $REQUEST

ogauthier Mar 19, 2015 - 2:31pm S:\ACAD\200119.10\LOTB.dwg

DIST	COUNTY	ROUTE	POST MILES TOTAL PROJECT	SHEET No	TOTAL SHEETS
02	TEH	CO RD		114	138

REGISTERED CIVIL ENGINEER DATE

PLANS APPROVAL DATE

REGISTERED PROFESSIONAL ENGINEER — GARY PARIKH — No. G.E. 666 — Exp. 12/31/15 — GEOTECHNICAL — STATE OF CALIFORNIA

T. Y. Lin International or its officers or agents shall not be responsible for the accuracy or completeness of scanned copies of this plan sheet.

T·Y·LIN INTERNATIONAL
1601 RESPONSE ROAD, SUITE 260
SACRAMENTO, CA 95815

PARIKH CONSULTANTS, INC.
2360 QUME DRIVE, SUITE A
SAN JOSE, CA 95131

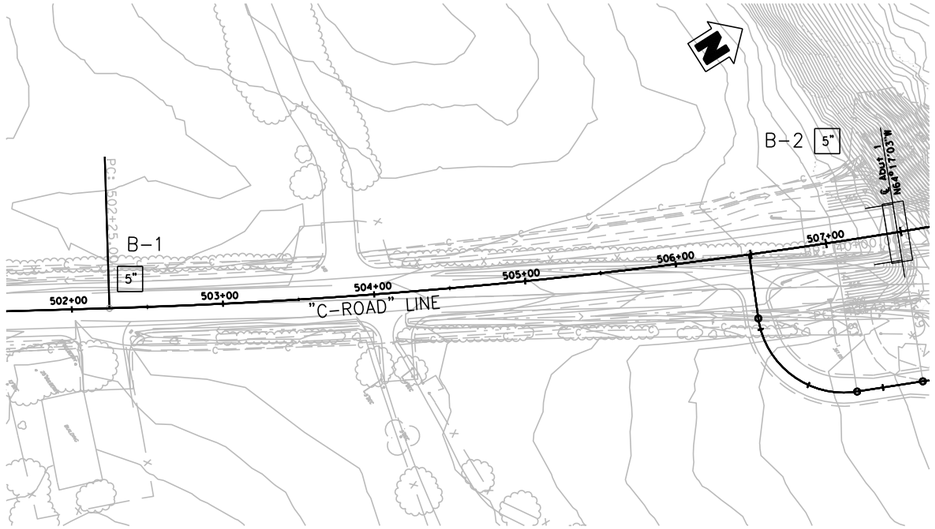

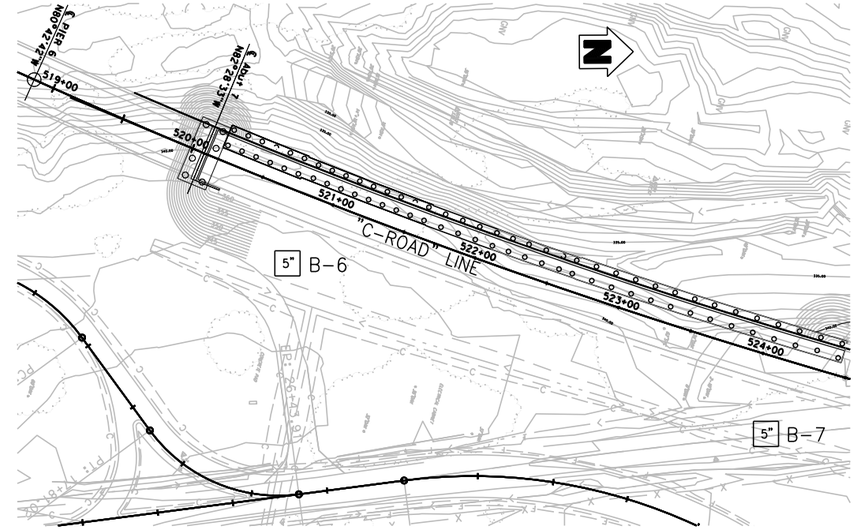

PLAN
1"=50'

Notes:
Standard Penetration Test Sampler: I.D. = 1.4"; O.D. = 2" Modified California Sampler: I.D. = 2.5"; O.D. = 3" Hammer Assembly: A 140 lb hammer with a 30" drop (Automatic Hammer)

This LOTB sheet was prepared in accordance with the Caltrans Soil & Rock, Logging, Classification, and Presentation Manual (June 2007)

All dimensions are in feet unless otherwise shown

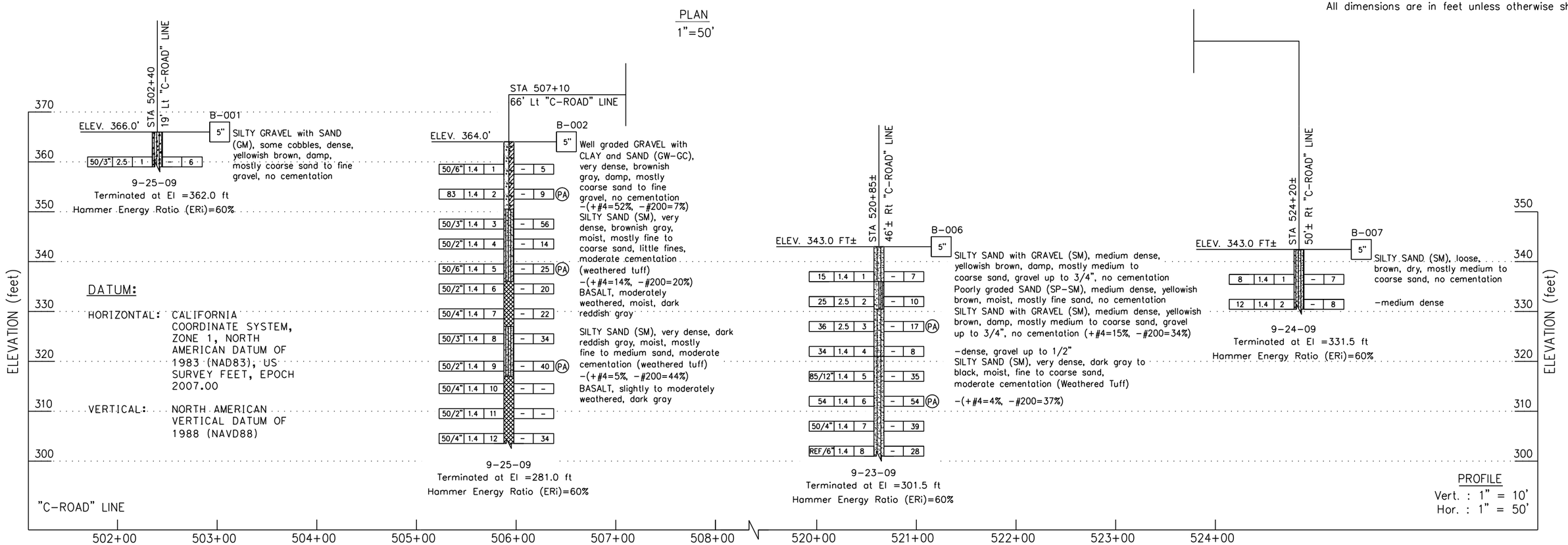

65% SUBMITTAL, NOT FOR CONSTRUCTION

DESIGN OVERSIGHT	DRAWN BY	K. OUYANG	L. BHANGOO/V. SANTOS FIELD INVESTIGATION BY:	**PREPARED FOR THE TEHAMA COUNTY PUBLIC WORKS DEPARTMENT**	D. WANG PROJECT ENGINEER
SIGN OFF DATE	CHECKED BY	EMRE ORTAKCI	DATE: SEPTEMBER 2009		

BRIDGE NO. 08C-0374 — POST MILES –

SACRAMENTO RIVER BRIDGE AT JELLYS FERRY ROAD

LOG OF TEST BORINGS 2 OF 2

OGS GEOTECHNICAL LOG OF TEST BORINGS SHEET (ENGLISH) (REV. 06-01-09)

ORIGINAL SCALE IN INCHES FOR REDUCED PLANS 0 1 2 3

CU – EA –

DISREGARD PRINTS BEARING EARLIER REVISION DATES

REVISION DATES: ? 2/9/10

SHEET 33 OF 33

FILE => $REQUEST

ogpuhler Mar 19, 2015 - 2:31pm S:\ACAD\200119.10\LOTB.dwg

USERNAME => $USER DATE PLOTTED => $DATE TIME PLOTTED =>

DIST	COUNTY	ROUTE	POST MILES TOTAL PROJECT	SHEET No	TOTAL SHEETS
02	TEH	CR		115	138

REGISTERED CIVIL ENGINEER DATE

PLANS APPROVAL DATE

REGISTERED PROFESSIONAL ENGINEER Brian Hansen No. 58976 Exp. 6/30/15 CIVIL STATE OF CALIFORNIA

T. Y. Lin International or its officers or agents shall not be responsible for the accuracy or completeness of scanned copies of this plan sheet.

T·Y·LIN INTERNATIONAL
1601 Response Road, Suite 260
SACRAMENTO, CA 95815

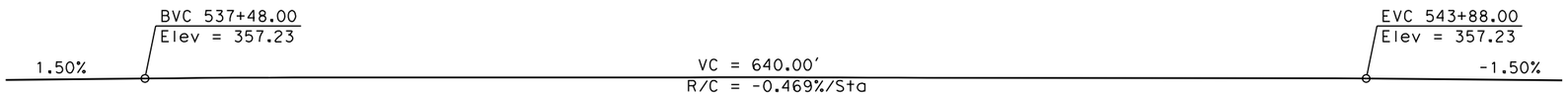

PROFILE
No Scale

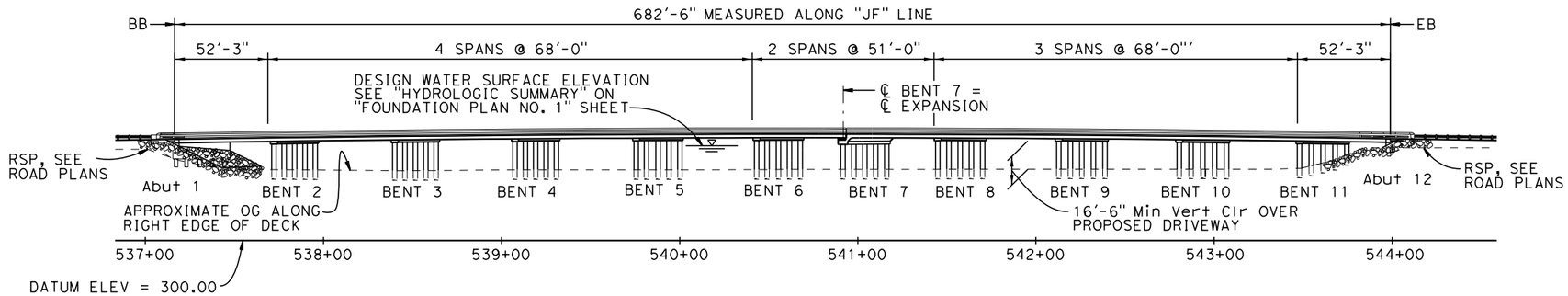

ELEVATION
1"=40'

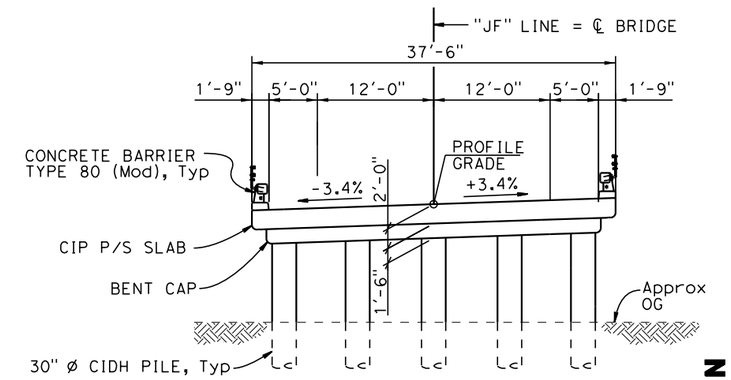

TYPICAL SECTION
1/8"=1'-0"

CURVE 2 DATA:
R= 3970.00'
Δ= 13°38'27"
T= 474.82
L= 945.16

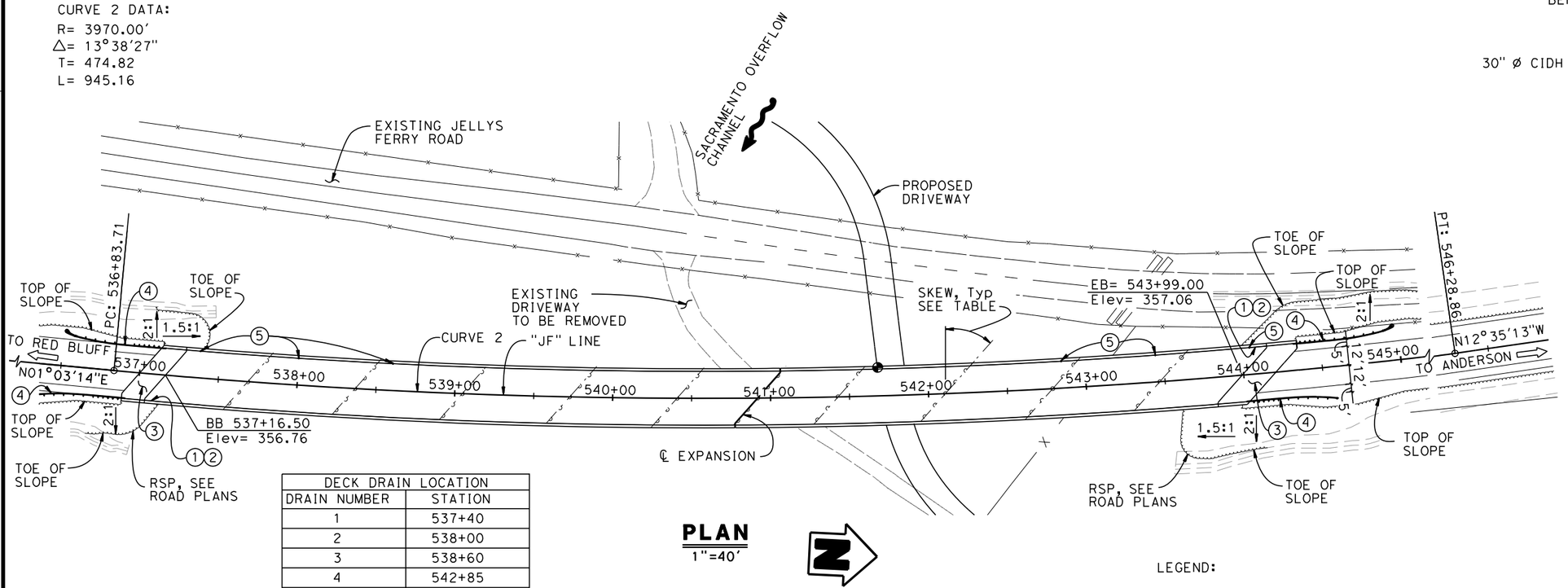

DECK DRAIN LOCATION	
DRAIN NUMBER	STATION
1	537+40
2	538+00
3	538+60
4	542+85
5	543+45
6	544+05

PLAN
1"=40'

SKEW TABLE	
LOCATION	SKEW
BB	36°38'03"
BENT 2	37°23'18"
BENT 3	38°22'11"
BENT 4	39°21'04"
BENT 5	40°19'57"
BENT 6	41°18'50"
BENT 7	42°02'60"
BENT 8	42°47'09"
BENT 9	43°46'02"
BENT 10	44°44'55"
BENT 11	45°43'48"
EB	46°29'03"

NOTES:
1. Paint "BRIDGE NO. 08C-0378"
2. Paint "SACRAMENTO OVERFLOW BRIDGE AT JELLYS FERRY ROAD"
3. Structure Approach Type N(30S) (MOD)
4. Metal Beam Guard Rail see Road Plans
5. Deck Drain Type "B"

LEGEND:
◕ - INDICATES POINT OF MIN VERTICAL CLEARANCE

65% SUBMITTAL, NOT FOR CONSTRUCTION

USERNAME => hhidalgo DATE PLOTTED => 3/20/2015 TIME PLOTTED => 1:00:29 PM

X
DESIGN OVERSIGHT
X
SIGN OFF DATE

	BY	CHECKED
DESIGN	B. Hansen	
DETAILS	H. Hidalgo	
QUANTITIES	M. Philipps	

LOAD & RESISTANCE FACTOR DESIGN — LIVE LOADING: HL93 W/"LOW-BOY" AND PERMIT DESIGN VEHICLE

	BY	CHECKED
LAYOUT	B. Hansen	X
SPECIFICATIONS	M. Wolohan	PLANS AND SPECS COMPARED X

PREPARED FOR TEHAMA COUNTY PUBLIC WORKS DEPARTMENT

Michael Wolohan
PROJECT ENGINEER

BRIDGE NO. 08C-0378
POST MILES

SACRAMENTO OVERFLOW BRIDGE AT JELLYS FERRY ROAD
GENERAL PLAN

DESIGN GENERAL PLAN SHEET (ENGLISH) (REV. 03/14/12)

ORIGINAL SCALE IN INCHES FOR REDUCED PLANS 0 1 2 3

UNIT: X
PROJECT NUMBER & PHASE: X
CONTRACT NO.: X

DISREGARD PRINTS BEARING EARLIER REVISION DATES

REVISION DATES X

SHEET 1 OF 24

FILE => t:\sacramento\legacy\prj_file\710054 - jellys ferry bridge\500_engineering\520_structures\521_cadd\0540F_dgn\0540F-a-gp01.dgn

DIST	COUNTY	ROUTE	POST MILES TOTAL PROJECT	SHEET NO	TOTAL SHEETS
02	TEH	CR		116	138

REGISTERED CIVIL ENGINEER DATE

PLANS APPROVAL DATE

REGISTERED PROFESSIONAL ENGINEER Brian Hansen No. 58976 Exp. 6/30/15 CIVIL STATE OF CALIFORNIA

T. Y. Lin International or its officers or agents shall not be responsible for the accuracy or completeness of scanned copies of this plan sheet.

T·Y·LIN INTERNATIONAL
1601 Response Road, Suite 260
SACRAMENTO, CA 95815

GENERAL NOTES
LOAD AND RESISTANCE FACTOR DESIGN

DESIGN: AASHTO LRFD Bridge Design Specifications, 6th Edition and the Caltrans Amendments, preface dated January 2014

SEISMIC DESIGN: Caltrans Seismic Design Criteria (SDC) Version 1.7 April 2013

DEAD LOAD: Includes 35 psf for future wearing surface

LIVE LOADING: HL93 and permit design load

SEISMIC LOADING: Soil Profile: V_{S30} = 1475 ft/sec
Moment Magnitude: Mmax = 6.60±0.25
Peak Ground Acceleration 0.276g

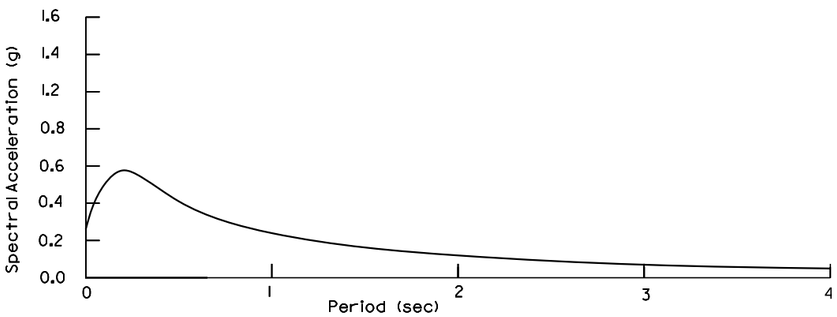

ARS CURVE

REINFORCED CONCRETE: fy = 60 ksi
f'c = See "CONCRETE STRENGTHS AND TYPE LIMITS"
n = 8

PRESTRESSED CONCRETE: See prestressing notes on "CONCRETE SLAB DETAILS NO. 1" sheet.

STANDARD PLANS DATED MAY, 2010

DETAIL	DESCRIPTION
A10A	Abbreviations (sheet 1 of 2)
RSP A10B	Abbreviations (sheet 2 of 2)
A10C	Lines and Symbols (sheet 1 of 3)
A10D	Lines and Symbols (sheet 2 of 3)
A10E	Lines and Symbols (sheet 3 of 3)
A62C	Limits of Payment for Excavation and Backfill Bridge
B0-1	Bridge Details
B0-3	Bridge Details
B0-5	Bridge Details
B0-13	Bridge Details
B7-5	Deck Drains
RSP B8-5	Cast-In-Place Prestressed Girder Details
RSP B11-60	CONCRETE BARRIER TYPE 80 (Sheet 1 of 2)
B11-61	CONCRETE BARRIER TYPE 80 (Sheet 2 of 2)

Standard plan sheet no.

Detail no.

QUANTITIES

STRUCTURE EXCAVATION (BRIDGE)	265	CY
STRUCTURE BACKFILL (BRIDGE)	180	CY
30" CAST-IN-DRILLED HOLE CONCRETE PILING	3486	LF
PRESTRESSING CAST-IN-PLACE CONCRETE	1	LS
STRUCTURAL CONCRETE, BRIDGE	2500	CY
STRUCTURAL CONCRETE, APPROACH SLAB (TYPE N MODIFIED)	60	CY
MINOR CONCRETE	4	CY
BAR REINFORCING STEEL (BRIDGE)	667849	LB
HEADED BAR REINFORCEMENT	400	EA
BRIDGE DECK DRAINAGE SYSTEM	270	LB
CONCRETE BARRIER TYPE 80 (MODIFIED)	1438	LF
JOINT SEAL ASSEMBLY (MR 4")	146	LF
TUBULAR BICYCLE RAILING	1438	LF

INDEX TO BRIDGE PLANS

SHEET NO.	TITLE
1	GENERAL PLAN
2	INDEX TO PLANS
3	DECK CONTOURS
4	FOUNDATION PLAN NO. 1
5	FOUNDATION PLAN NO. 2
6	ABUTMENT 1 LAYOUT
7	ABUTMENT 12 LAYOUT
8	ABUTMENT DETAILS NO. 1
9	ABUTMENT DETAILS NO. 2
10	BENT 2-6, 8-11 LAYOUT
11	BENT 7 LAYOUT
12	BENT DETAILS NO. 1
13	BENT DETAILS NO. 2
14	TYPICAL SECTION
15	CONCRETE SLAB DETAILS NO. 1
16	CONCRETE SLAB DETAILS NO. 2
17	CONCRETE SLAB DETAILS NO. 3
18	CONCRETE SLAB DETAILS NO. 4
19	STRIP JOINT SEAL ASSEMBLY
20	STRUCTURE APPROACH TYPE N(30S) (MOD)
21	STRUCTURE APPROACH DRAINAGE DETAILS
22	TUBULAR BICYCLE RAILING DETAILS
23	LOG OF TEST BORINGS 1 OF 2
24	LOG OF TEST BORINGS 2 OF 2

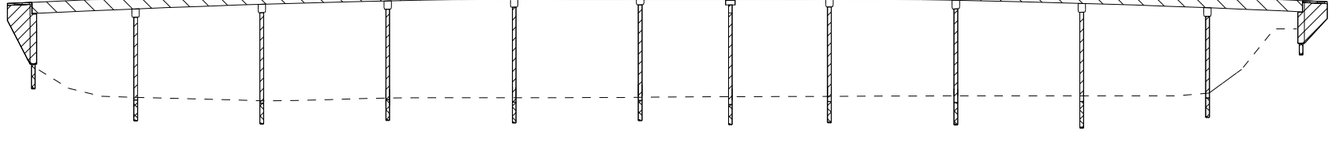

STRUCTURAL CONCRETE, BRIDGE (5.0 KSI @ 28 DAYS)
STRUCTURAL CONCRETE, BRIDGE (4.0 KSI @ 28 DAYS)
CIDH CONCRETE PILING (4.0 KSI @ 28 DAYS)
STRUCTURAL CONCRETE APPROACH SLAB TYPE N(30S)

CONCRETE STRENGTHS AND TYPE LIMITS

No Scale

65% SUBMITTAL, NOT FOR CONSTRUCTION

USERNAME => hhidalgo DATE PLOTTED => 3/20/2015 TIME PLOTTED => 1:00:31 PM

X
DESIGN OVERSIGHT
X
SIGN OFF DATE

	BY	CHECKED
DESIGN	B. Hansen	
DETAILS	H. Hidalgo	
QUANTITIES	M. Philipps	

PREPARED FOR
TEHAMA COUNTY
PUBLIC WORKS DEPARTMENT

Michael Wolohan
PROJECT ENGINEER

BRIDGE NO. 08C-0378
POST MILES X

SACRAMENTO OVERFLOW BRIDGE AT JELLYS FERRY ROAD
INDEX TO PLANS

DESIGN DETAIL SHEET (ENGLISH) (REV. 03/14/12)

ORIGINAL SCALE IN INCHES FOR REDUCED PLANS 0 1 2 3

UNIT: X
PROJECT NUMBER & PHASE: X
CONTRACT NO.: X

DISREGARD PRINTS BEARING EARLIER REVISION DATES

REVISION DATES X

SHEET 2 OF 24

FILE => t:\sacramento\legacy\prj_file\710054 - jellys ferry bridge\500_engineering\520_structures\521_cadd\0540F_dgn\0540F-a-itp.dgn

DIST	COUNTY	ROUTE	POST MILES TOTAL PROJECT	SHEET No	TOTAL SHEETS
02	TEH	CR		117	138

REGISTERED CIVIL ENGINEER DATE

PLANS APPROVAL DATE

REGISTERED PROFESSIONAL ENGINEER Brian Hansen No. 58976 Exp. 6/30/15 CIVIL STATE OF CALIFORNIA

T. Y. Lin International or its officers or agents shall not be responsible for the accuracy or completeness of scanned copies of this plan sheet.

T·Y·LIN INTERNATIONAL
1601 Response Road, Suite 260
SACRAMENTO, CA 95815

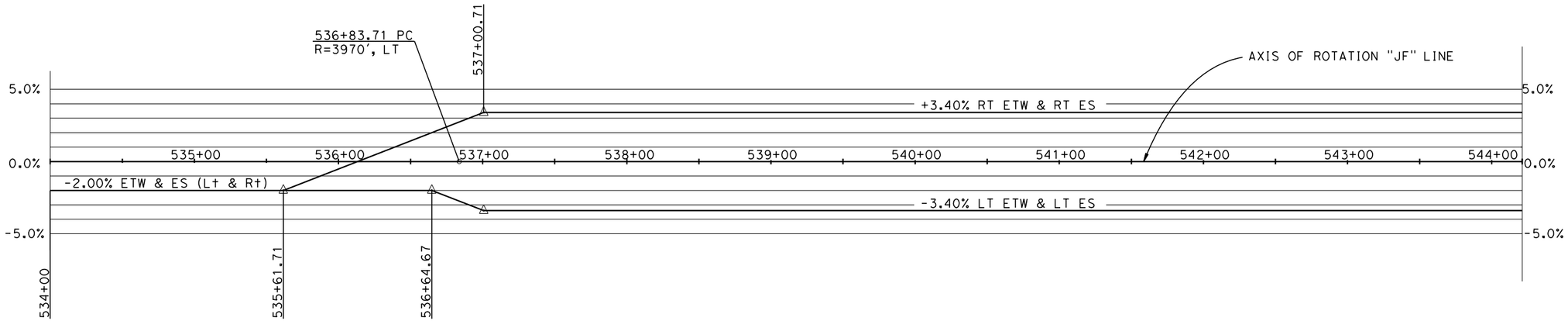

SUPER ELEVATION DIAGRAM

No Scale

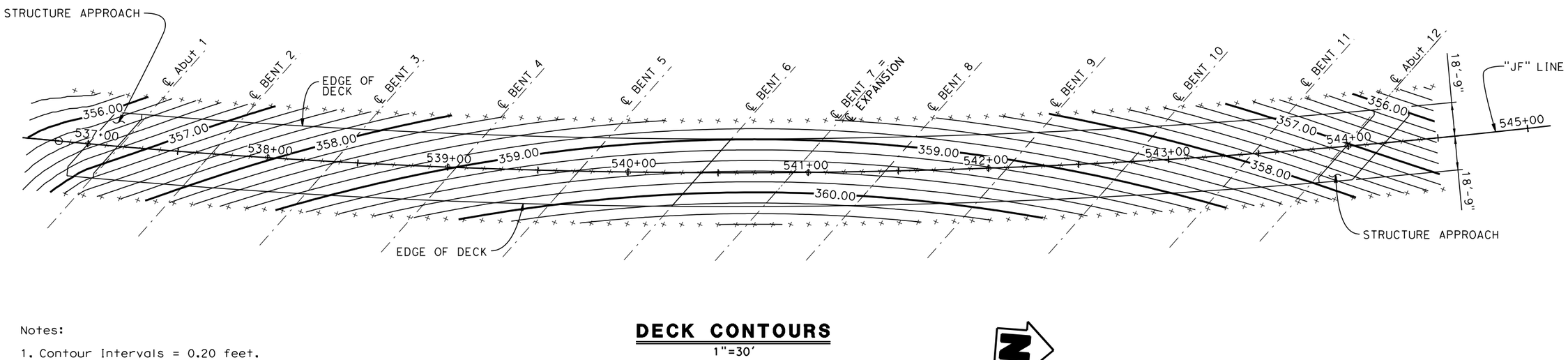

DECK CONTOURS

1"=30'

Notes:

1. Contour Intervals = 0.20 feet.
2. Contours do not include camber.
3. x - Indicates 10' interval measured along station line.

65% SUBMITTAL, NOT FOR CONSTRUCTION

USERNAME => hhidalgo DATE PLOTTED => 3/20/2015 TIME PLOTTED => 11:00:33 PM

X
DESIGN OVERSIGHT

X
SIGN OFF DATE

	BY	CHECKED
DESIGN	B. Hansen	
DETAILS	H. Hidalgo	
QUANTITIES	M. Philipps	

PREPARED FOR
TEHAMA COUNTY
PUBLIC WORKS DEPARTMENT

Michael Wolohan
PROJECT ENGINEER

BRIDGE NO. 08C-0378
POST MILES X

SACRAMENTO OVERFLOW BRIDGE AT JELLYS FERRY ROAD

DECK CONTOURS

DESIGN DETAIL SHEET (ENGLISH) (REV. 03/14/12)

ORIGINAL SCALE IN INCHES FOR REDUCED PLANS 0 1 2 3

UNIT: X
PROJECT NUMBER & PHASE: X
CONTRACT NO.: X

DISREGARD PRINTS BEARING EARLIER REVISION DATES

REVISION DATES: X

SHEET 3 OF 24

FILE => t:\sacramento\legacy\pri_file\710054 - jellys ferry bridge\500_engineering\520_structures\521_cadd\0540F_dgn\0540F-d-dc01.dgn

DIST	COUNTY	ROUTE	POST MILES TOTAL PROJECT	SHEET NO	TOTAL SHEETS
02	TEH	CR		118	138

REGISTERED CIVIL ENGINEER X DATE

PLANS APPROVAL DATE

REGISTERED PROFESSIONAL ENGINEER Brian Hansen No. 58976 Exp. 6/30/15 CIVIL STATE OF CALIFORNIA

T. Y. Lin International or its officers or agents shall not be responsible for the accuracy or completeness of scanned copies of this plan sheet.

T·Y·LIN INTERNATIONAL
1601 Response Road, Suite 260
SACRAMENTO, CA 95815

HYDROLOGIC SUMMARY (WITH DRIFT)	Design Flood	Base Flood	Overtopping Flood	Flood of Record
Frequency (Years)	50	100	200	20
Discharge (Cubic feet per second)	11500	15200	20000	7900
Water Surface (Elevation at bridge)	351.3	352.9	356.0	349.3

Flood plain data is based upon information available when the plans were prepared and are shown to meet federal requirements. The accuracy of said information is not warranted by the State, County, or City and interested or affected parties should make their own investigations. Drainage Area = 8900 square miles.
Ordinary high water mark elevation = 333.0

PILE DATA TABLE

Location	Pile Type	Nominal Resistance (KIPS) Compression	Nominal Resistance (KIPS) Tension	Cut-off Elevation	Design Tip Elevation	Specified Tip Elevation
Abut 1	30" Ø CIDH	360	N/A	342.75	(1) 312	312
BENT 2	30" Ø CIDH	813	N/A	338	(1) 277 (2) 307	277
BENT 3	30" Ø CIDH	867	N/A	338	(1) 274 (2) 307	274
BENT 4	30" Ø CIDH	846	N/A	338	(1) 274 (2) 307	274
BENT 5	30" Ø CIDH	878	N/A	338	(1) 274 (2) 307	274
BENT 6	30" Ø CIDH	808	N/A	338	(1) 277 (2) 308	277
BENT 7	30" Ø CIDH	692	N/A	338	(1) 283 (2) 315	283
BENT 8	30" Ø CIDH	812	N/A	338	(1) 277 (2) 308	277
BENT 9	30" Ø CIDH	891	N/A	338	(1) 273 (2) 307	273
BENT 10	30" Ø CIDH	872	N/A	338	(1) 274 (2) 307	274
BENT 11	30" Ø CIDH	821	N/A	338	(1) 276 (2) 307	276
Abut 12	30" Ø CIDH	378	N/A	343.75	(1) 311	311

Design Tip Elevations are controlled by the following demands:
(1) Compression, (2) Tension, (3) Lateral loads

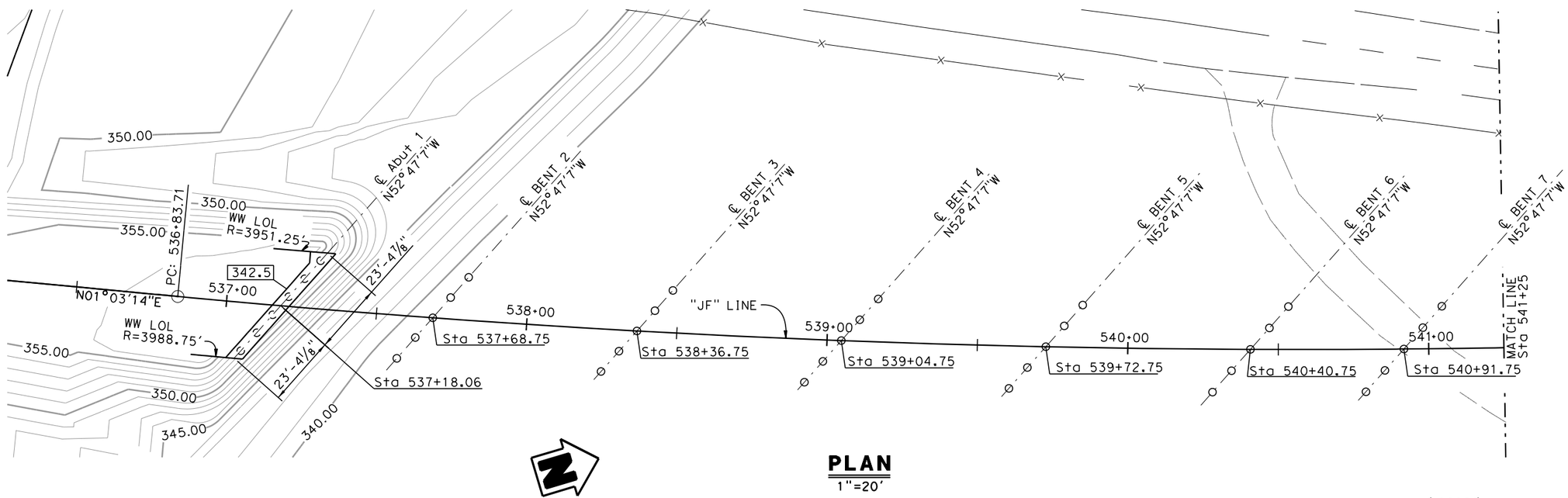

PLAN
1"=20'

Legend:
- Indicates bottom of footing elevation
- Indicates CIDH Pile

65% SUBMITTAL, NOT FOR CONSTRUCTION

GEOTECHNICAL PROFESSIONAL APPROVAL DATE

X
DESIGN OVERSIGHT
X
SIGN OFF DATE

SCALE: X	VERT.DATUM NAVD 88	HORZ.DATUM NAD 83
PHOTOGRAMMETRY AS OF: X	ALIGNMENT TIES X	
SURVEYED	BY X	DRAFTED BY X
FIELD CHECKED	BY X	CHECKED BY X

	BY	CHECKED
DESIGN	B. Hansen	
DETAILS	H. Hidalgo	
QUANTITIES	M. Philipps	

PREPARED FOR
TEHAMA COUNTY
PUBLIC WORKS DEPARTMENT

Michael Wolohan
PROJECT ENGINEER

BRIDGE NO. 08C-0378
POST MILES

SACRAMENTO OVERFLOW BRIDGE AT JELLYS FERRY ROAD
FOUNDATION PLAN NO. 1

FOUNDATION PLAN SHEET (ENGLISH) (REV. 03/14/12)

ORIGINAL SCALE IN INCHES FOR REDUCED PLANS 0 1 2 3

UNIT: X
PROJECT NUMBER & PHASE: X
CONTRACT NO.: X

DISREGARD PRINTS BEARING EARLIER REVISION DATES

REVISION DATES X

SHEET 4 OF 24

FILE => t:\sacramento\legacy\prj_file\710054 - jellys ferry bridge\500_engineering\520_structures\521_cadd\0540F_dgn\0540F-e-fnp101.dgn

USERNAME => hhidalgo DATE PLOTTED => 3/20/2015 TIME PLOTTED => 1:00:36 PM

DIST	COUNTY	ROUTE	POST MILES TOTAL PROJECT	SHEET No	TOTAL SHEETS
02	TEH	CR		119	138

REGISTERED CIVIL ENGINEER X DATE

PLANS APPROVAL DATE

REGISTERED PROFESSIONAL ENGINEER
Brian Hansen
No. 58976
Exp. 6/30/15
CIVIL
STATE OF CALIFORNIA

T. Y. Lin International or its officers or agents shall not be responsible for the accuracy or completeness of scanned copies of this plan sheet.

T·Y·LIN INTERNATIONAL
1601 Response Road, Suite 260
SACRAMENTO, CA 95815

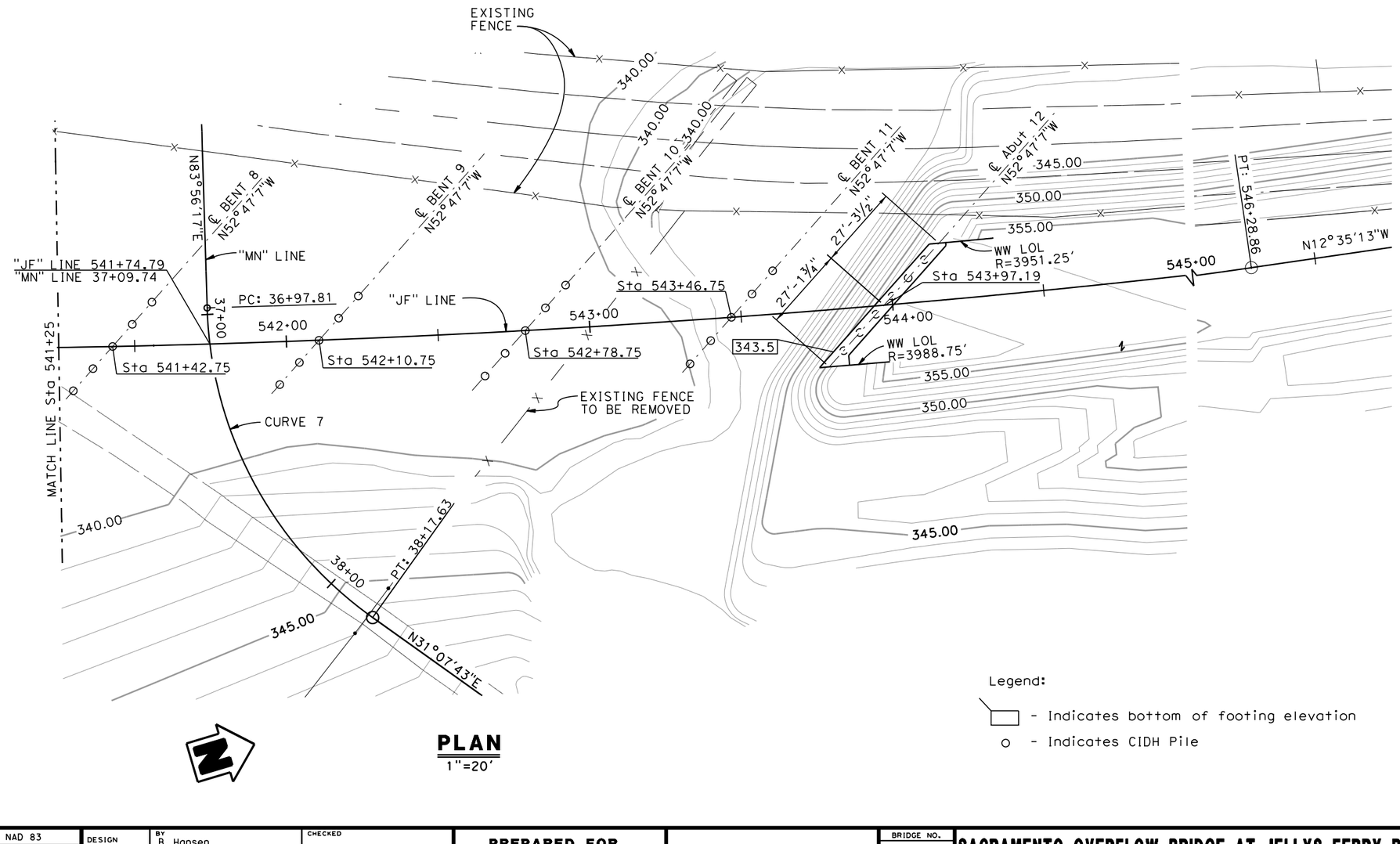

CURVE 7 DATA:
R= 130.00'
△= 52°48'35"
T= 64.55
L= 119.82

PLAN
1"=20'

Legend:
▭ - Indicates bottom of footing elevation
○ - Indicates CIDH Pile

65% SUBMITTAL, NOT FOR CONSTRUCTION

GEOTECHNICAL PROFESSIONAL APPROVAL DATE

X
DESIGN OVERSIGHT
X
SIGN OFF DATE

SCALE: X	VERT.DATUM NAVD 88	HORZ.DATUM NAD 83	
PHOTOGRAMMETRY AS OF: X		ALIGNMENT TIES X	
SURVEYED	BY X	DRAFTED	BY X
FIELD CHECKED	BY X	CHECKED	BY X

	BY	CHECKED
DESIGN	B. Hansen	
DETAILS	H. Hidalgo	
QUANTITIES	M. Philipps	

PREPARED FOR
TEHAMA COUNTY
PUBLIC WORKS DEPARTMENT

Michael Wolohan
PROJECT ENGINEER

BRIDGE NO. 08C-0378
POST MILES

SACRAMENTO OVERFLOW BRIDGE AT JELLYS FERRY ROAD
FOUNDATION PLAN NO. 2

FOUNDATION PLAN SHEET (ENGLISH) (REV. 03/14/12)

ORIGINAL SCALE IN INCHES FOR REDUCED PLANS 0 1 2 3

UNIT: X
PROJECT NUMBER & PHASE: X
CONTRACT NO.: X

DISREGARD PRINTS BEARING EARLIER REVISION DATES

REVISION DATES X

SHEET 5 OF 24

FILE => t:\sacramento\legacy\prj_file\710054 - jellys ferry bridge\500_engineering\520_structures\521_cadd\0540F_dgn\0540F-e-fnp102.dgn

USERNAME => hhidalgo DATE PLOTTED => 3/20/2015 TIME PLOTTED => 1:00:38 PM

DIST	COUNTY	ROUTE	POST MILES TOTAL PROJECT	SHEET No	TOTAL SHEETS
02	TEH	CR		120	138

REGISTERED CIVIL ENGINEER DATE

PLANS APPROVAL DATE

REGISTERED PROFESSIONAL ENGINEER Brian Hansen No. 58976 Exp. 6/30/15 CIVIL STATE OF CALIFORNIA

T. Y. Lin International or its officers or agents shall not be responsible for the accuracy or completeness of scanned copies of this plan sheet.

T·Y·LIN INTERNATIONAL
1601 Response Road, Suite 260
SACRAMENTO, CA 95815

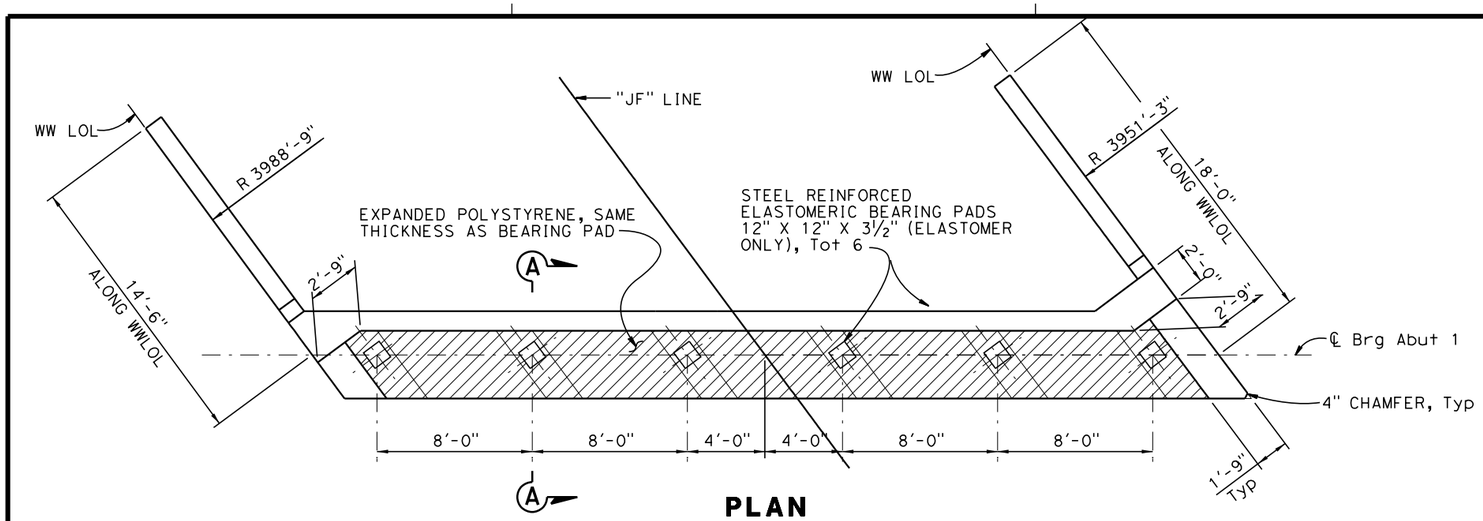

PLAN
¼"=1'-0"

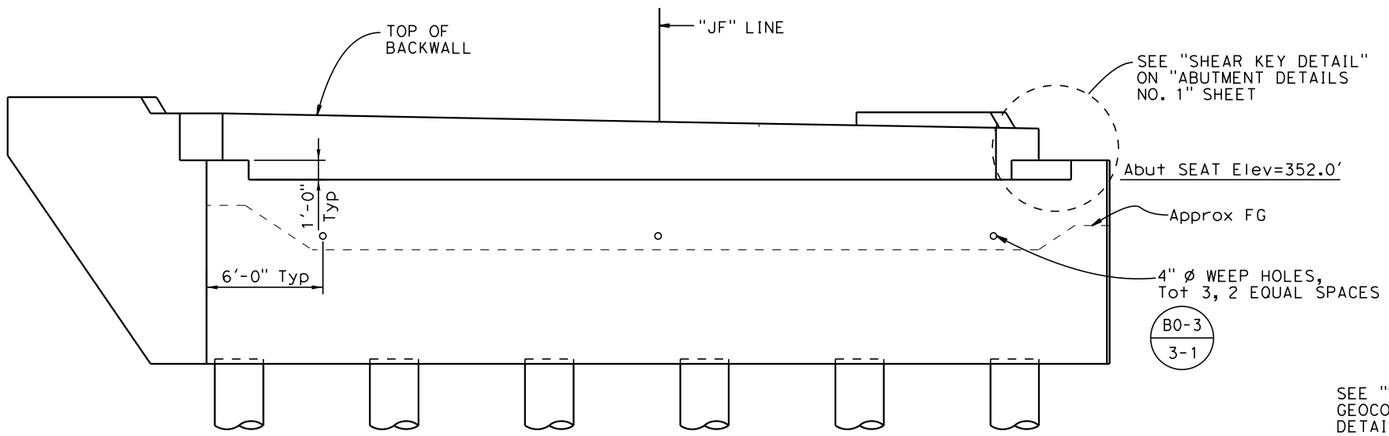

ELEVATION
¼"=1'-0"

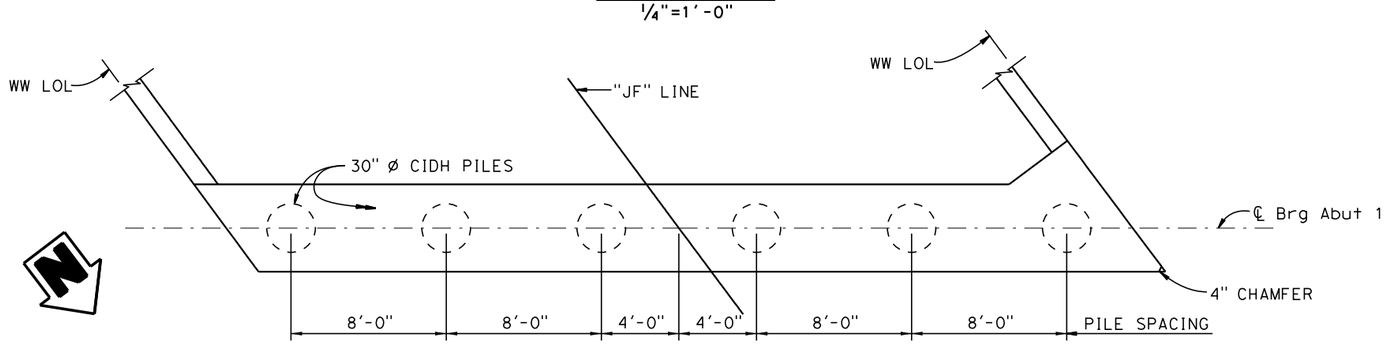

PILE LAYOUT
¼"=1'-0"

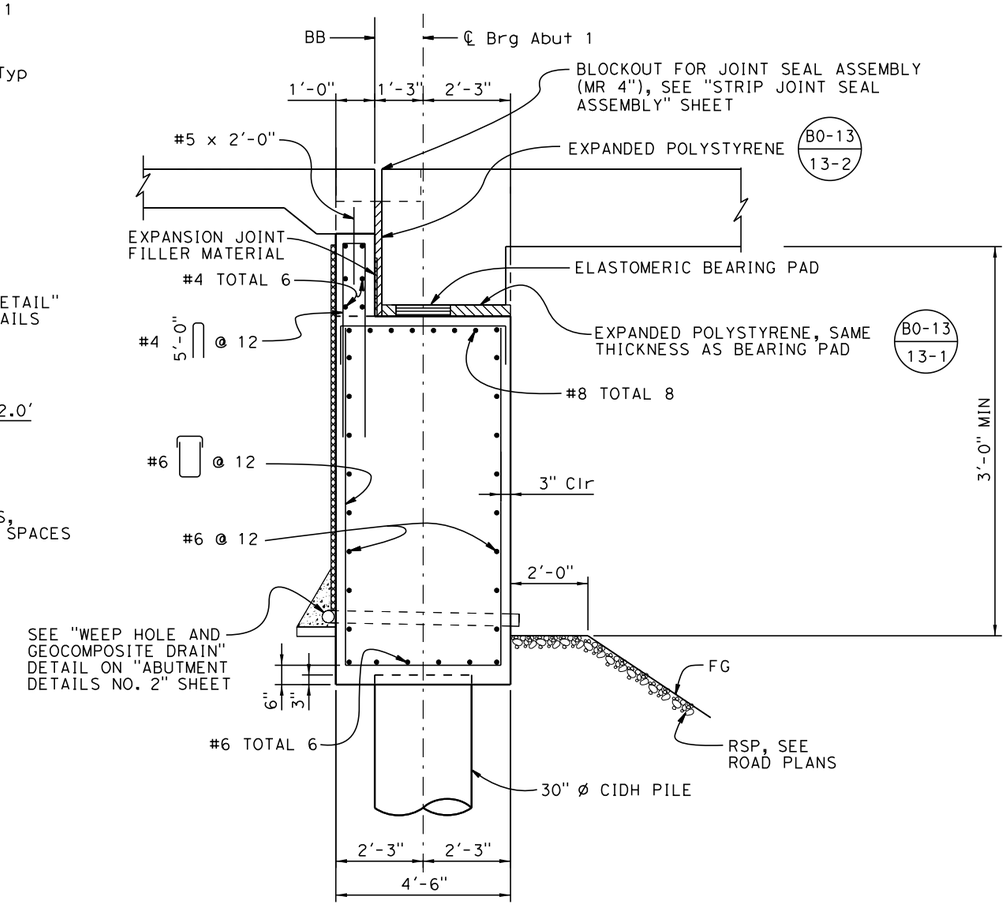

SECTION A-A
½"=1'-0"

NOTES:

1. Backwall to be placed after prestressing.
2. For Wingwall details not shown, see "ABUTMENT DETAILS NO. 1" sheet.
3. For CIDH details not shown, see "ABUTMENT DETAILS NO. 2" sheet.
4. Barriers not shown.

65% SUBMITTAL, NOT FOR CONSTRUCTION

USERNAME => hhidalgo DATE PLOTTED => 3/20/2015 TIME PLOTTED => 1:00:41 PM

X
DESIGN OVERSIGHT
X
SIGN OFF DATE

	BY	CHECKED
DESIGN	B. Hansen	
DETAILS	H. Hidalgo	
QUANTITIES	M. Philipps	

PREPARED FOR
TEHAMA COUNTY
PUBLIC WORKS DEPARTMENT

Michael Wolohan
PROJECT ENGINEER

BRIDGE NO. 08C-0378
POST MILES X

SACRAMENTO OVERFLOW BRIDGE AT JELLYS FERRY ROAD
ABUTMENT 1 LAYOUT

DESIGN DETAIL SHEET (ENGLISH) (REV. 03/14/12)

ORIGINAL SCALE IN INCHES FOR REDUCED PLANS 0 1 2 3

UNIT: X
PROJECT NUMBER & PHASE: X
CONTRACT NO.: X

DISREGARD PRINTS BEARING EARLIER REVISION DATES

REVISION DATES X

SHEET 6 OF 24

FILE => t:\sacramento\legacy\pri_file\710054 - jellys ferry bridge\500_engineering\520_structures\521_cadd\0540F_dgn\0540F-f-a01_lo1.dgn

DIST	COUNTY	ROUTE	POST MILES TOTAL PROJECT	SHEET No	TOTAL SHEETS
02	TEH	CR		121	138

REGISTERED CIVIL ENGINEER DATE

PLANS APPROVAL DATE

REGISTERED PROFESSIONAL ENGINEER Brian Hansen No. 58976 Exp. 6/30/15 CIVIL STATE OF CALIFORNIA

T. Y. Lin International or its officers or agents shall not be responsible for the accuracy or completeness of scanned copies of this plan sheet.

T·Y·LIN INTERNATIONAL
1601 Response Road, Suite 260
SACRAMENTO, CA 95815

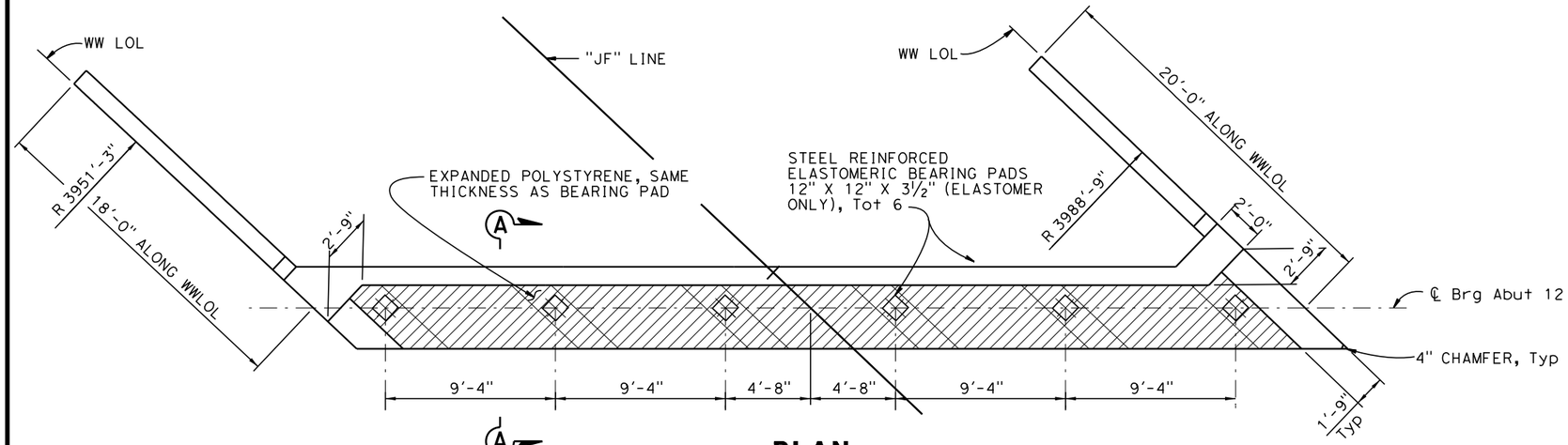

PLAN
¼"=1'-0"

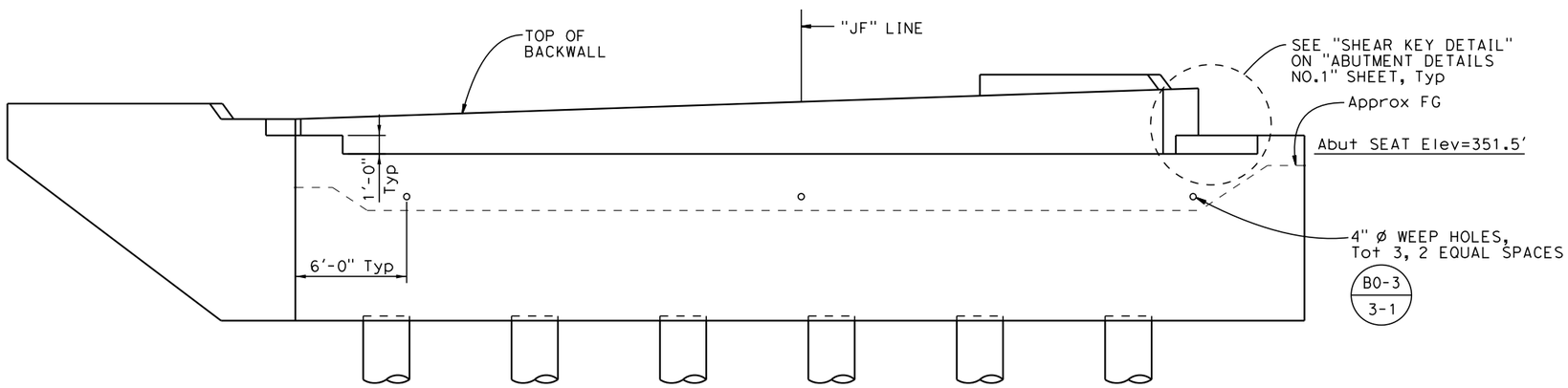

ELEVATION
¼"=1'-0"

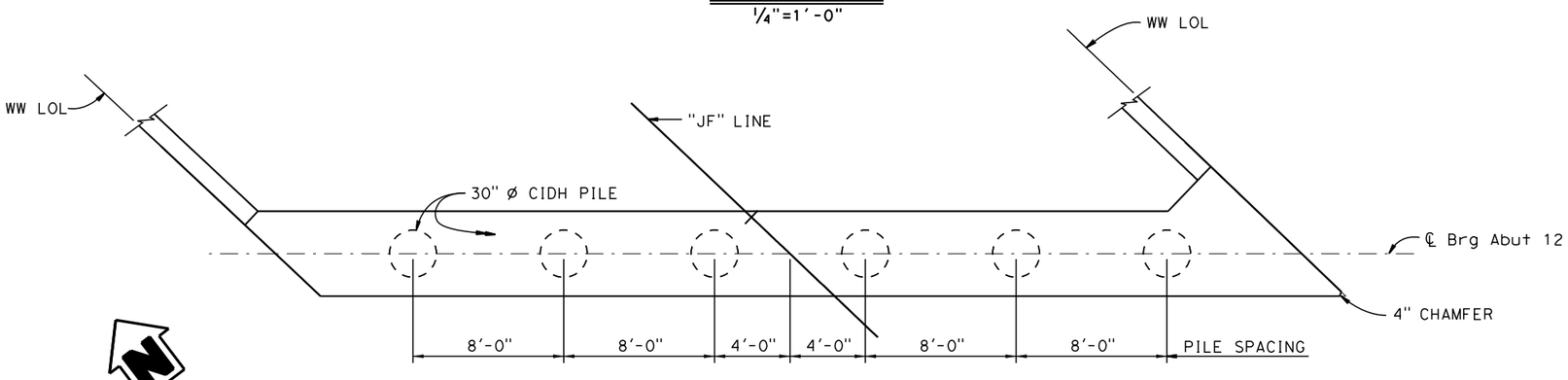

PILE LAYOUT
¼"=1'-0"

NOTES:

1. Backwall to be placed after prestressing.
2. For Wingwall details not shown, see "ABUTMENT DETAILS NO. 1" sheet.
3. For CIDH details not shown, see "ABUTMENT DETAILS NO. 2" sheet.
4. Barriers not shown.
5. For "SECTION A-A", see "ABUTMENT 1 LAYOUT" sheet.

65% SUBMITTAL, NOT FOR CONSTRUCTION

X
DESIGN OVERSIGHT
X
SIGN OFF DATE

	BY	CHECKED
DESIGN	B. Hansen	
DETAILS	H. Hidalgo	
QUANTITIES	M. Philipps	

PREPARED FOR
TEHAMA COUNTY
PUBLIC WORKS DEPARTMENT

Michael Wolohan
PROJECT ENGINEER

BRIDGE NO. 08C-0378
POST MILES X

SACRAMENTO OVERFLOW BRIDGE AT JELLYS FERRY ROAD
ABUTMENT 12 LAYOUT

DESIGN DETAIL SHEET (ENGLISH) (REV. 03/14/12)

ORIGINAL SCALE IN INCHES FOR REDUCED PLANS 0 1 2 3

UNIT: X
PROJECT NUMBER & PHASE: X
CONTRACT NO.: X

DISREGARD PRINTS BEARING EARLIER REVISION DATES

REVISION DATES X

SHEET 7 OF 24

FILE => t:\sacramento\legacy\pri_file\710054 - jellys ferry bridge\500_engineering\520_structures\521_cadd\0540F_dgn\0540F-f-a01a12_lo1.dgn

USERNAME => hhidalgo DATE PLOTTED => 3/20/2015 TIME PLOTTED => 1:00:43 PM

DIST	COUNTY	ROUTE	POST MILES TOTAL PROJECT	SHEET No	TOTAL SHEETS
02	TEH	CR		122	138

REGISTERED CIVIL ENGINEER DATE

PLANS APPROVAL DATE

REGISTERED PROFESSIONAL ENGINEER Brian Hansen No. 58976 Exp. 6/30/15 CIVIL STATE OF CALIFORNIA

T. Y. Lin International or its officers or agents shall not be responsible for the accuracy or completeness of scanned copies of this plan sheet.

T·Y·LIN INTERNATIONAL
1601 Response Road, Suite 260
SACRAMENTO, CA 95815

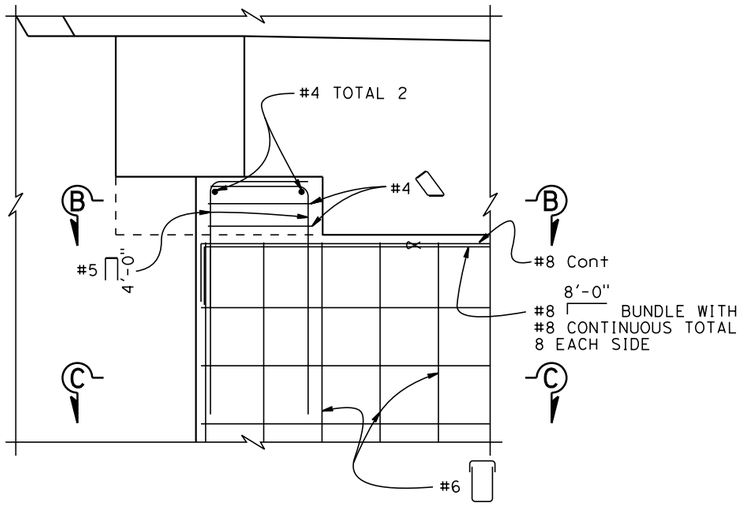

SHEAR KEY DETAIL
½"=1'-0"

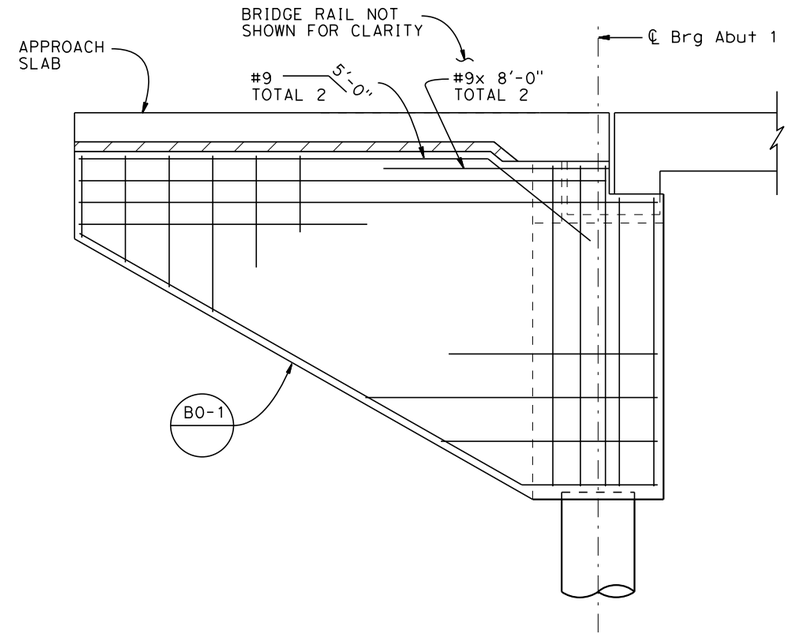

WINGWALL ELEVATION
NO SCALE

Notes:

1. Construction joint, surface to be smooth finish and lined with 15 pound constuction paper.
2. Shear Key and wingwall reinforcement to be discontinuous as shown.
3. Abutment 1 shown Abutment 12 similar.

Legend:

∝ Indicates Bundle Bars

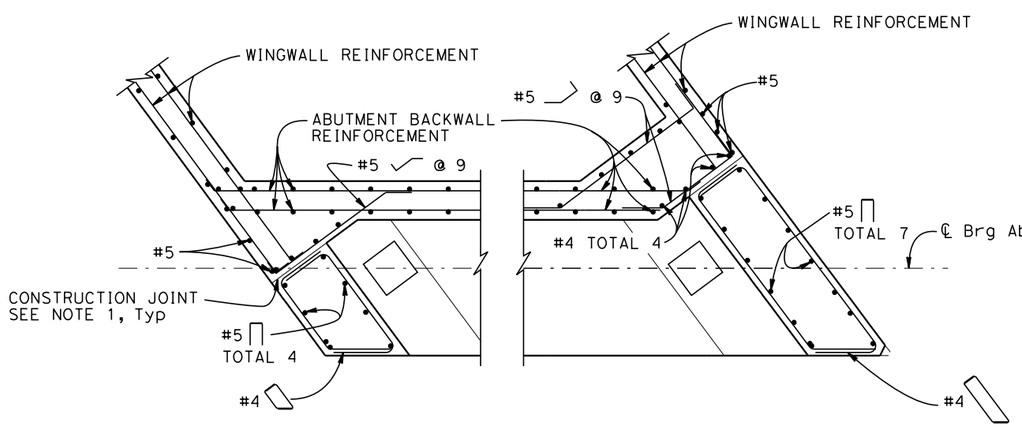

SECTION B-B
½"=1'-0"

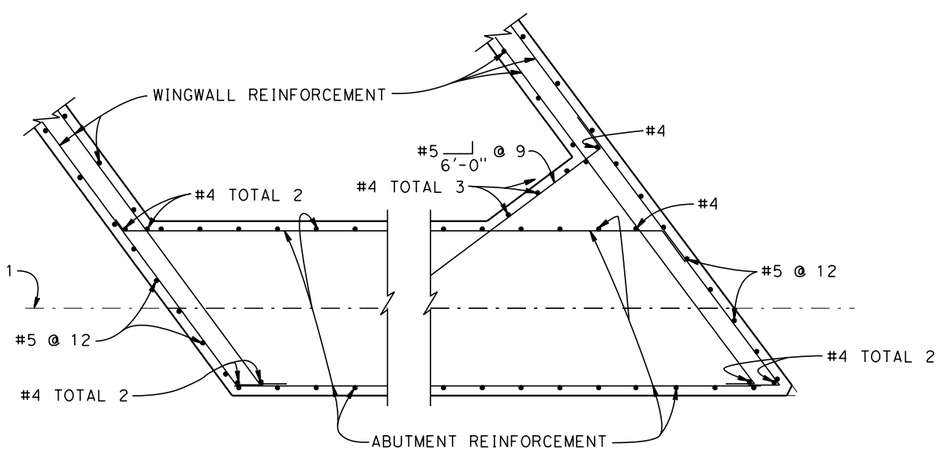

SECTION C-C
½"=1'-0"

65% SUBMITTAL, NOT FOR CONSTRUCTION

USERNAME => hhidalgo DATE PLOTTED => 3/20/2015 TIME PLOTTED => 1:00:45 PM

X DESIGN OVERSIGHT	DESIGN	BY B. Hansen	CHECKED	PREPARED FOR TEHAMA COUNTY PUBLIC WORKS DEPARTMENT	Michael Wolohan PROJECT ENGINEER
X SIGN OFF DATE	DETAILS	BY H. Hidalgo	CHECKED		
	QUANTITIES	BY M. Philipps	CHECKED		

BRIDGE NO. 08C-0378 | POST MILES X

SACRAMENTO OVERFLOW BRIDGE AT JELLYS FERRY ROAD
ABUTMENT DETAILS NO. 1

DESIGN DETAIL SHEET (ENGLISH) (REV. 03/14/12)

ORIGINAL SCALE IN INCHES FOR REDUCED PLANS 0 1 2 3

UNIT: X
PROJECT NUMBER & PHASE: X CONTRACT NO.: X

DISREGARD PRINTS BEARING EARLIER REVISION DATES

REVISION DATES X

SHEET 8 OF 24

FILE => t:\sacramento\legacy\pri_file\710054 - jellys ferry bridge\500_engineering\520_structures\521_cadd\0540F_dgn\0540F-f-a01dt01.dgn

DIST	COUNTY	ROUTE	POST MILES TOTAL PROJECT	SHEET No	TOTAL SHEETS
02	TEH	CR 51		123	138

REGISTERED CIVIL ENGINEER DATE

PLANS APPROVAL DATE

REGISTERED PROFESSIONAL ENGINEER Brian Hansen No. 58976 Exp. 6/30/15 CIVIL STATE OF CALIFORNIA

T. Y. Lin International or its officers or agents shall not be responsible for the accuracy or completeness of scanned copies of this plan sheet.

T·Y·LIN INTERNATIONAL
1601 Response Road, Suite 260
SACRAMENTO, CA 95815

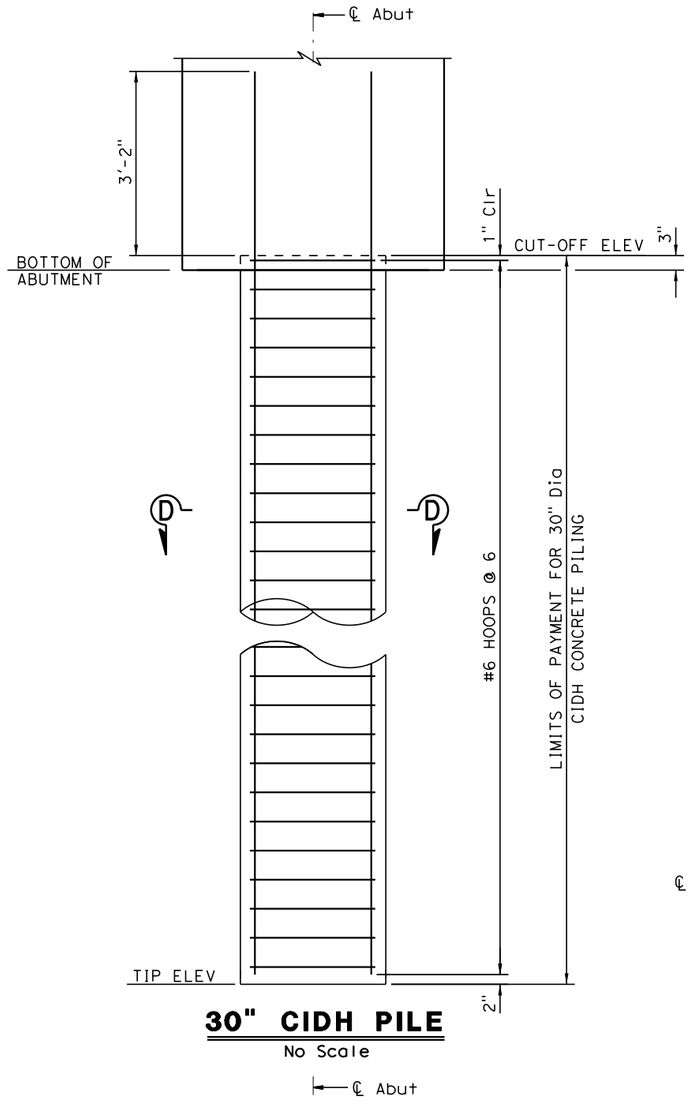

30" CIDH PILE

No Scale

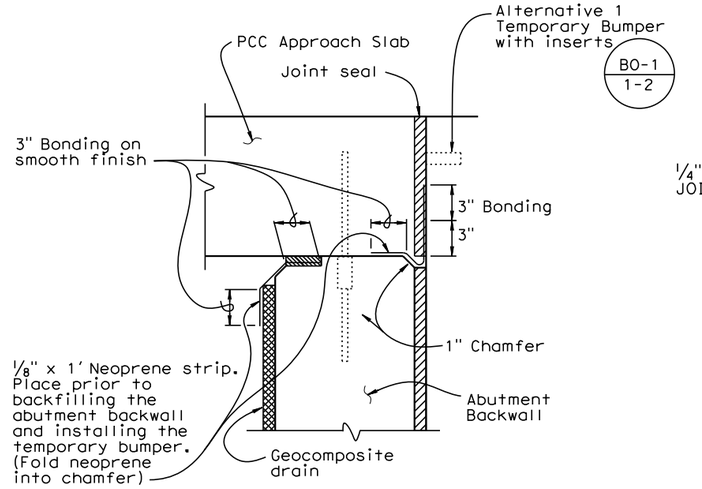

JOINT PROTECTION DETAIL

No Scale

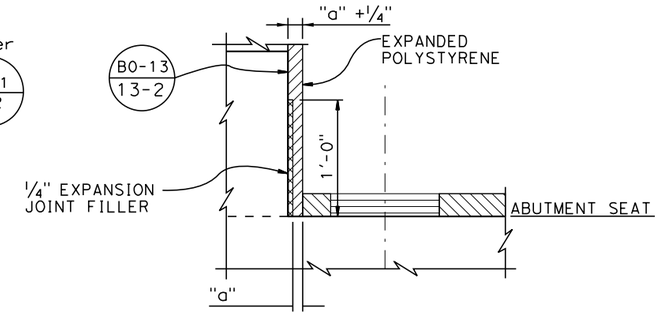

BACK WALL BASE DETAIL

No Scale

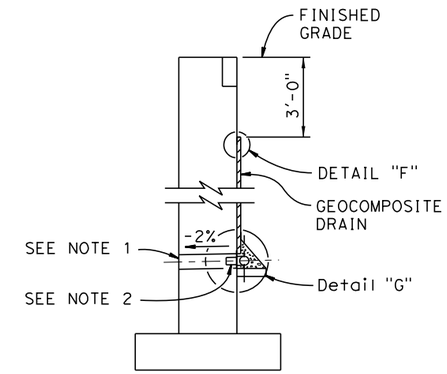

WALL SECTION

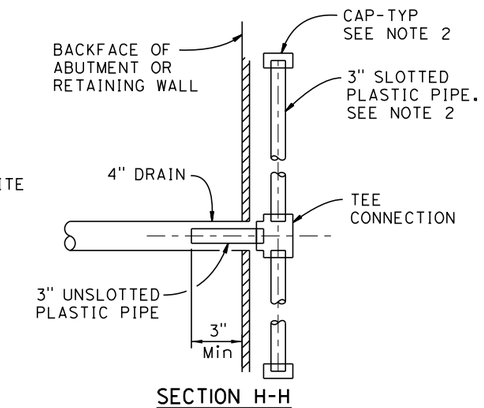

SECTION H-H

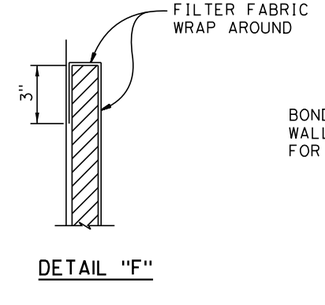

DETAIL "F"

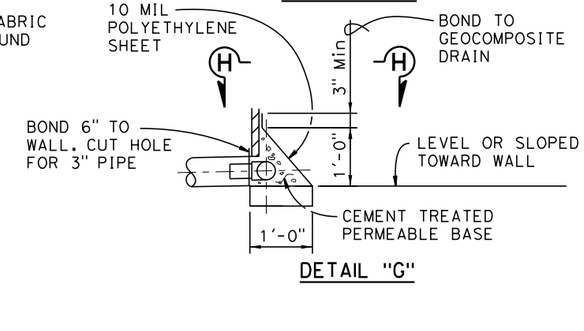

DETAIL "G"

WEEP HOLE AND GEOCOMPOSITE DRAIN

NOTES:

1. 4" ø drains at locations shown on "ABUTMENT 1 LAYOUT" and "ABUTMENT 12 LAYOUT" sheets. Exposed drains shall be located 3"± above finished grade.
2. Geocomposite drain, cement treated permeable base, and 3" ø slotted plastic pipe continuous behind abutment. Cap ends of pipe. Provide "Tee" connection at each 4" ø drain.
3. Connect the low end of plastic pipe to the main outlet pipe as applicable.
4. All hoops are "ULTIMATE" Butt spliced continuous.

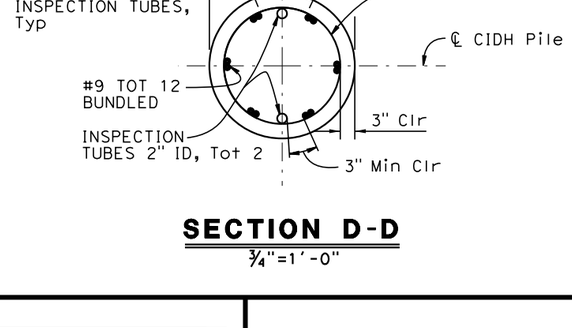

SECTION D-D

3/4"=1'-0"

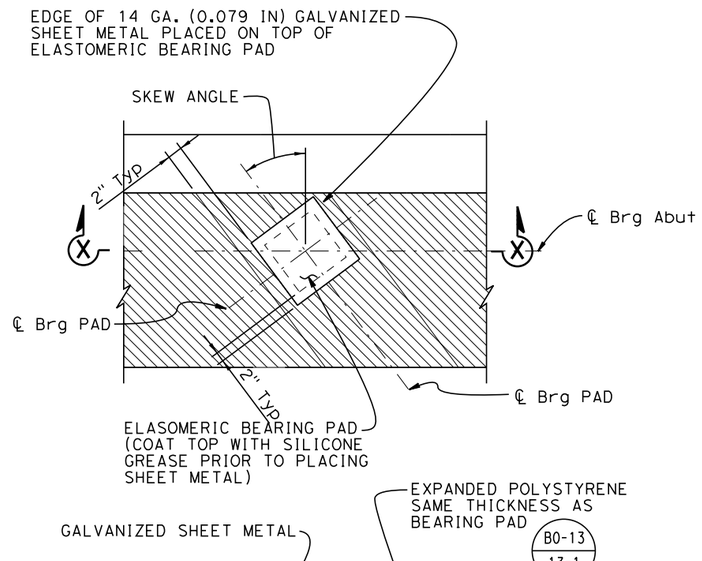

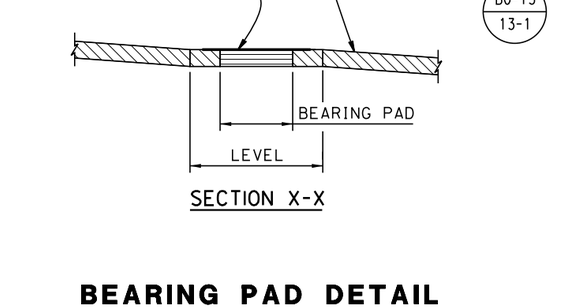

SECTION X-X

BEARING PAD DETAIL

No Scale

65% SUBMITTAL, NOT FOR CONSTRUCTION

X DESIGN OVERSIGHT		DESIGN	BY B. Hansen	CHECKED	PREPARED FOR TEHAMA COUNTY PUBLIC WORKS DEPARTMENT
X SIGN OFF DATE		DETAILS	BY H. Hidalgo	CHECKED	
		QUANTITIES	BY M. Philipps	CHECKED	

Michael Wolohan
PROJECT ENGINEER

BRIDGE NO. 08C-0378
POST MILES X

SACRAMENTO OVERFLOW BRIDGE AT JELLYS FERRY ROAD
ABUTMENT DETAILS NO. 2

DESIGN DETAIL SHEET (ENGLISH) (REV. 03/14/12)

ORIGINAL SCALE IN INCHES FOR REDUCED PLANS 0 1 2 3

UNIT: X
PROJECT NUMBER & PHASE: X
CONTRACT NO.: X

DISREGARD PRINTS BEARING EARLIER REVISION DATES

REVISION DATES X

SHEET 9 OF 24

DIST	COUNTY	ROUTE	POST MILES TOTAL PROJECT	SHEET No	TOTAL SHEETS
02	TEH	CR		124	138

REGISTERED CIVIL ENGINEER DATE

PLANS APPROVAL DATE

REGISTERED PROFESSIONAL ENGINEER Brian Hansen No. 58976 Exp. 6/30/15 CIVIL STATE OF CALIFORNIA

T. Y. Lin International or its officers or agents shall not be responsible for the accuracy or completeness of scanned copies of this plan sheet.

T·Y·LIN INTERNATIONAL
1601 Response Road, Suite 260
SACRAMENTO, CA 95815

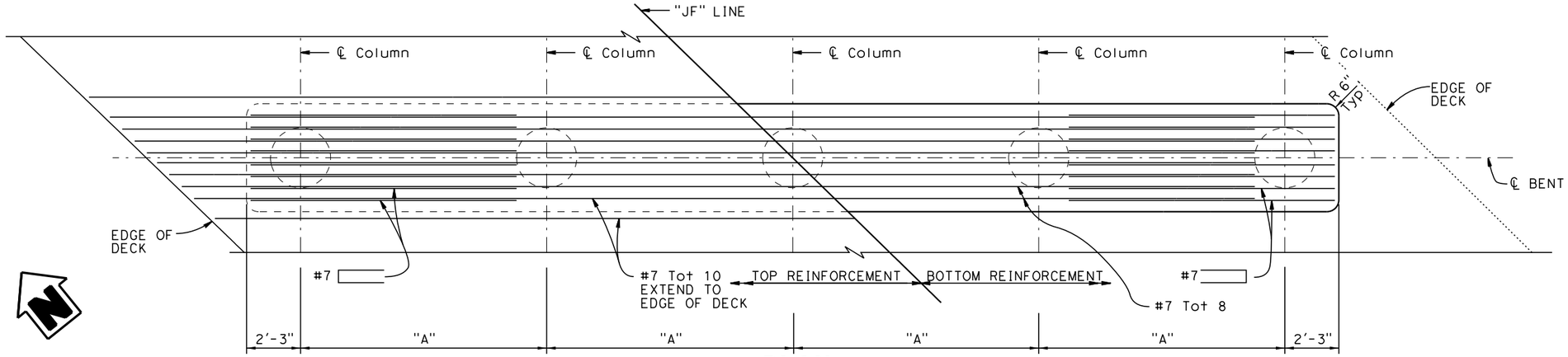

PLAN
3/8"=1'-0"

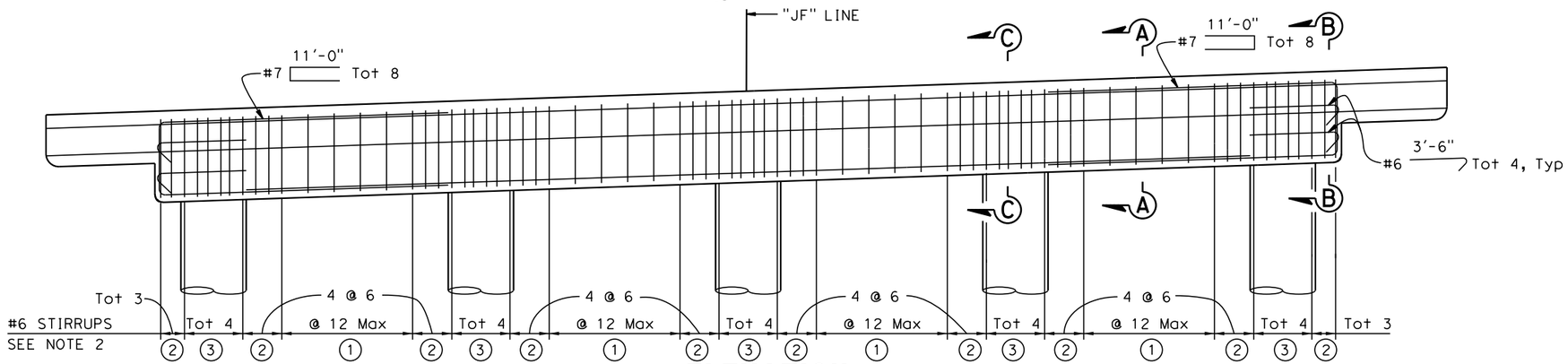

ELEVATION
3/8"=1'-0"

PILE DATA	
LOCATION	"A"
BENT 2	9'-0"
BENT 3	9'-0"
BENT 4	9'-3"
BENT 5	9'-3"
BENT 6	9'-6"
BENT 8	9'-9"
BENT 9	9'-9"
BENT 10	10'-0"
BENT 11	10'-3"

NOTES:

1. Clearance to main cap reinforcement.
2. Place normal to ℄ Bent.

STIRRUP CONFIGURATION

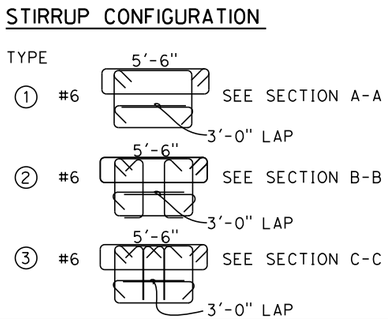

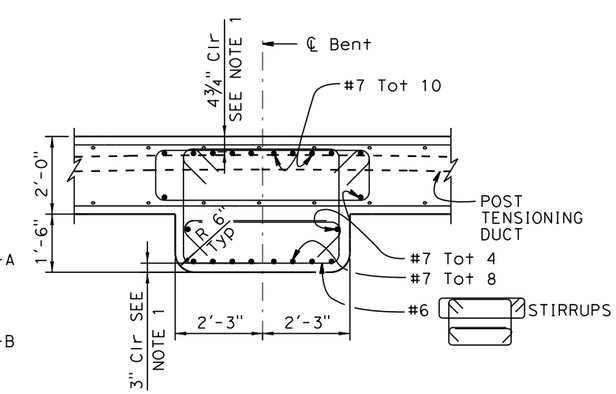

SECTION A-A
1/2"=1'-0"

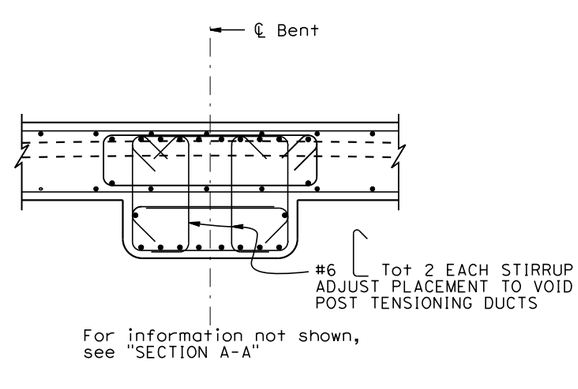

SECTION B-B
1/2"=1'-0"

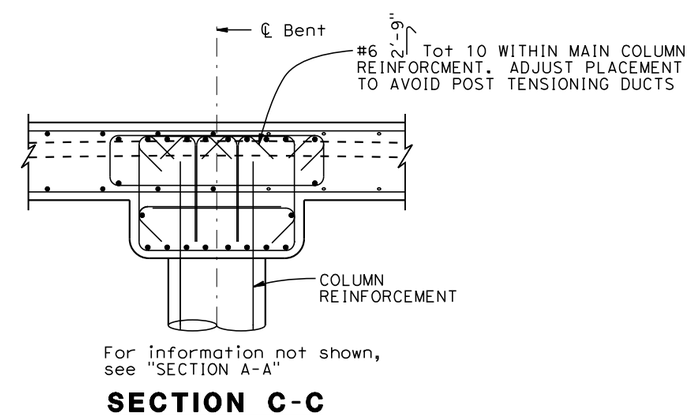

SECTION C-C
1/2"=1'-0"

65% SUBMITTAL, NOT FOR CONSTRUCTION

X DESIGN OVERSIGHT	DESIGN	BY B. Hansen	CHECKED
X SIGN OFF DATE	DETAILS	BY H. Hidalgo	CHECKED
	QUANTITIES	BY M. Philipps	CHECKED

PREPARED FOR **TEHAMA COUNTY PUBLIC WORKS DEPARTMENT**

Michael Wolohan
PROJECT ENGINEER

BRIDGE NO. 08C-0378
POST MILES X

SACRAMENTO OVERFLOW BRIDGE AT JELLYS FERRY ROAD

BENT 2-6, 8-11 LAYOUT

DESIGN DETAIL SHEET (ENGLISH) (REV. 03/14/12)

ORIGINAL SCALE IN INCHES FOR REDUCED PLANS 0 1 2 3

UNIT: X
PROJECT NUMBER & PHASE: X
CONTRACT NO.: X

DISREGARD PRINTS BEARING EARLIER REVISION DATES

REVISION DATES X

SHEET 10 OF 24

FILE => t:\sacramento\legacy\prj_file\710054 - jellys ferry bridge\500_engineering\520_structures\521_cadd\0540F_dgn\0540F-i-p02_lo01.dgn

USERNAME => hhidalgo DATE PLOTTED => 3/20/2015 TIME PLOTTED => 1:00:49 PM

DIST	COUNTY	ROUTE	POST MILES TOTAL PROJECT	SHEET NO	TOTAL SHEETS
02	TEH	CR		125	138

REGISTERED CIVIL ENGINEER DATE

PLANS APPROVAL DATE

REGISTERED PROFESSIONAL ENGINEER Brian Hansen No. 58976 Exp. 6/30/15 CIVIL STATE OF CALIFORNIA

T. Y. Lin International or its officers or agents shall not be responsible for the accuracy or completeness of scanned copies of this plan sheet.

T·Y·LIN INTERNATIONAL
1601 Response Road, Suite 260
SACRAMENTO, CA 95815

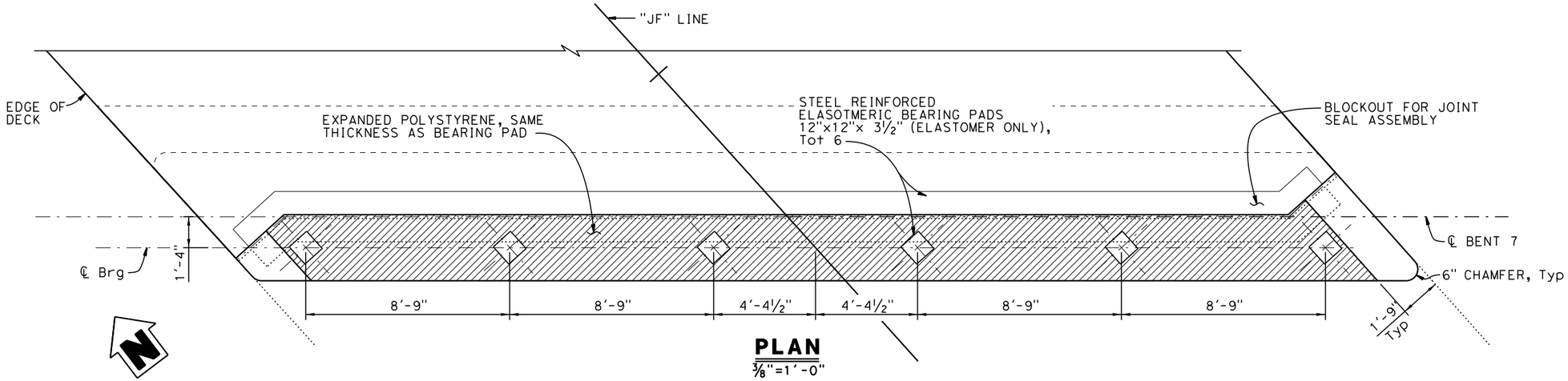

PLAN
⅜"=1'-0"

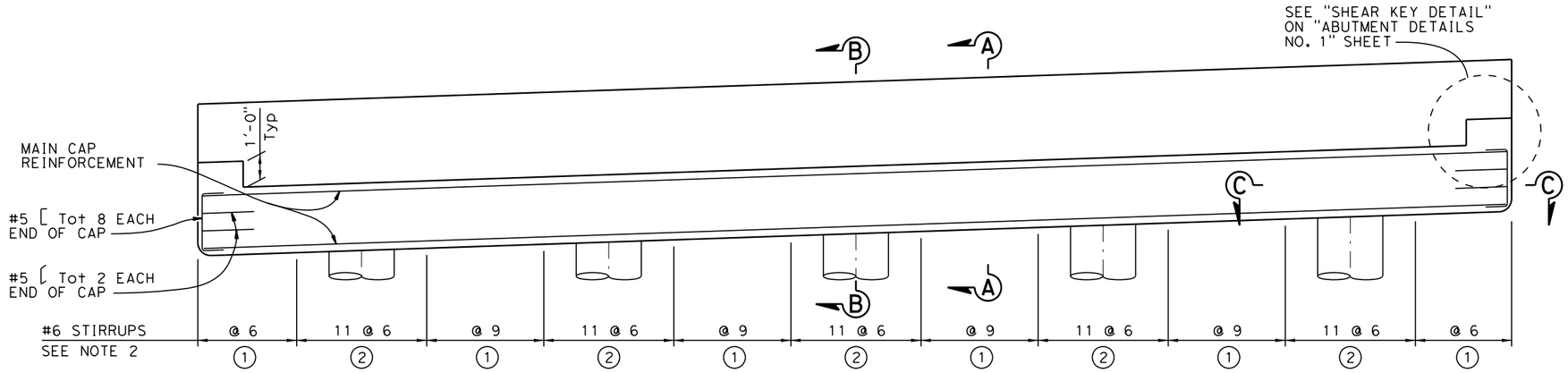

ELEVATION
⅜"=1'-0"

NOTES:

1. For "SECTION A-A", "SECTION B-B" and "SECTION C-C", see "BENT DETAILS NO. 1" sheet.
2. Stirrups shall be placed normal to ℄ Bent.

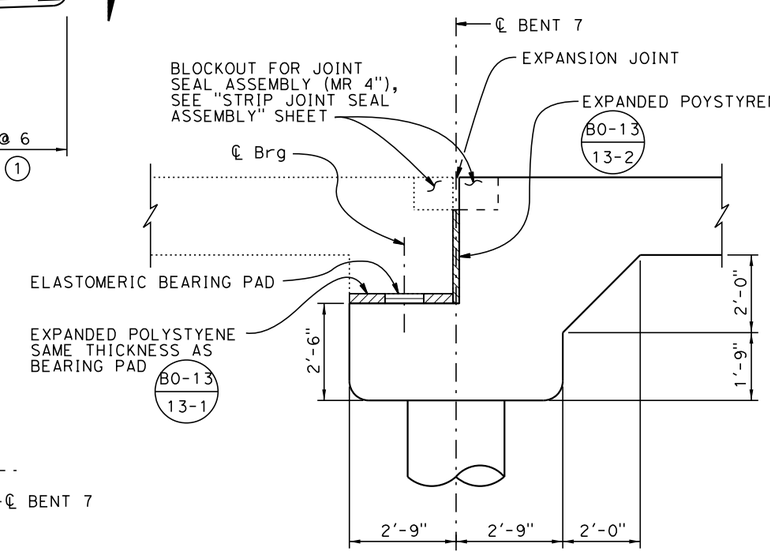

BENT CAP TYPICAL SECTION
½"=1'-0"

STIRRUP CONFIGURATION

TYPE

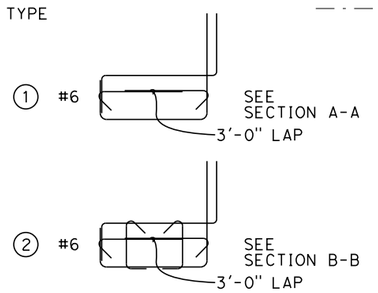

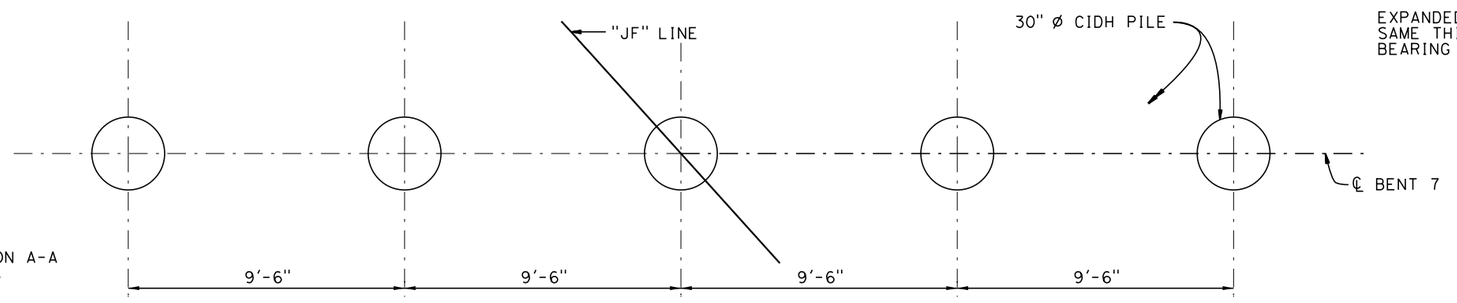

PILE LAYOUT
⅜"=1'-0"

65% SUBMITTAL, NOT FOR CONSTRUCTION

USERNAME => hhidalgo DATE PLOTTED => 3/20/2015 TIME PLOTTED => 1:00:51 PM

X DESIGN OVERSIGHT	DESIGN	BY B. Hansen	CHECKED
X SIGN OFF DATE	DETAILS	BY H. Hidalgo	CHECKED
	QUANTITIES	BY M. Philipps	CHECKED

PREPARED FOR
TEHAMA COUNTY
PUBLIC WORKS DEPARTMENT

Michael Wolohan
PROJECT ENGINEER

BRIDGE NO. 08C-0378
POST MILES X

SACRAMENTO OVERFLOW BRIDGE AT JELLYS FERRY ROAD
BENT 7 LAYOUT

DESIGN DETAIL SHEET (ENGLISH) (REV. 03/14/12)

ORIGINAL SCALE IN INCHES FOR REDUCED PLANS 0 1 2 3

UNIT: X
PROJECT NUMBER & PHASE: X
CONTRACT NO.: X

DISREGARD PRINTS BEARING EARLIER REVISION DATES

REVISION DATES X

SHEET 11 OF 24

FILE => t:\sacramento\legacy\pri_file\710054 - jellys ferry bridge\500_engineering\520_structures\521_cadd\0540F_dgn\0540F-i-p07_l001.dgn

DIST	COUNTY	ROUTE	POST MILES TOTAL PROJECT	SHEET No	TOTAL SHEETS
02	TEH	CR		126	138

REGISTERED CIVIL ENGINEER DATE

PLANS APPROVAL DATE

REGISTERED PROFESSIONAL ENGINEER Brian Hansen No. 58976 Exp. 6/30/15 CIVIL STATE OF CALIFORNIA

T. Y. Lin International or its officers or agents shall not be responsible for the accuracy or completeness of scanned copies of this plan sheet.

T·Y·LIN INTERNATIONAL
1601 Response Road, Suite 260
SACRAMENTO, CA 95815

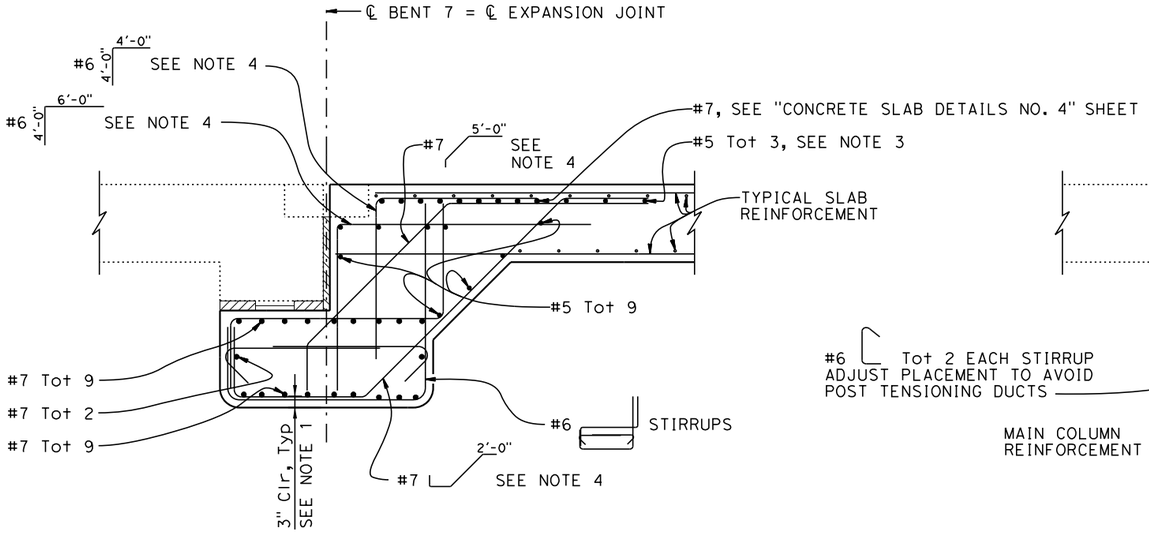

SECTION A-A
½"=1'-0"

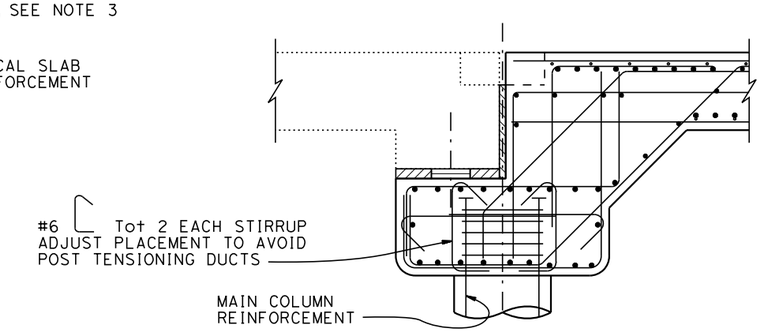

For information not shown, see "SECTION A-A"

SECTION B-B
½"=1'-0"

NOTES:

1. Clearance to main cap reinforcement.
2. Place normal to ℄ Bent.
3. Place parallel to ℄ Bent.
4. Match stirrup spacing.

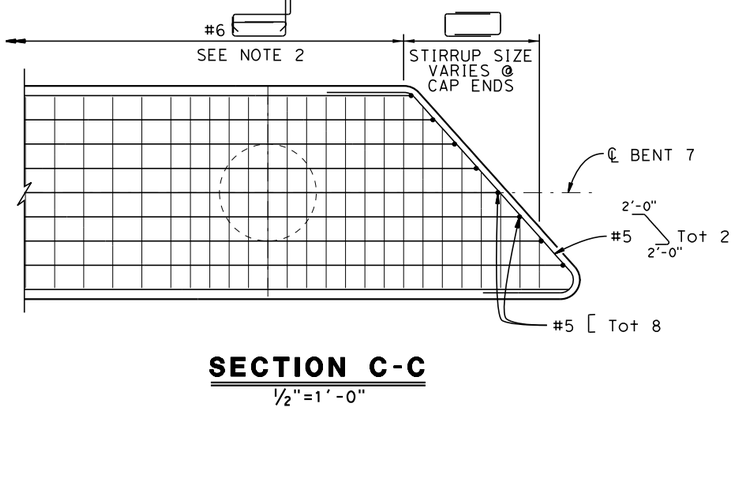

SECTION C-C
½"=1'-0"

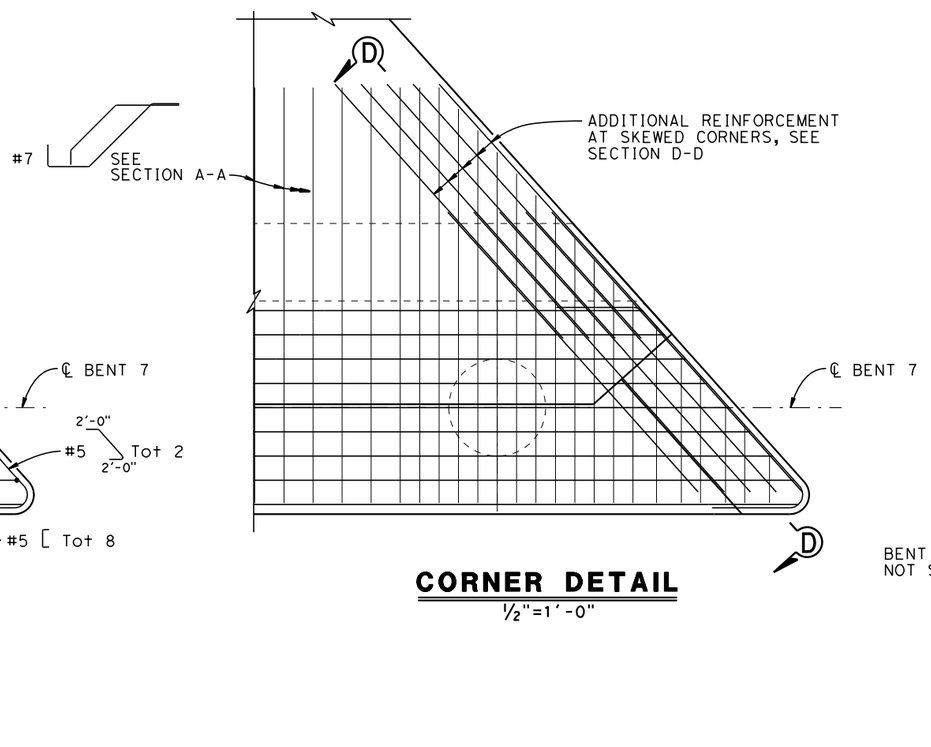

CORNER DETAIL
½"=1'-0"

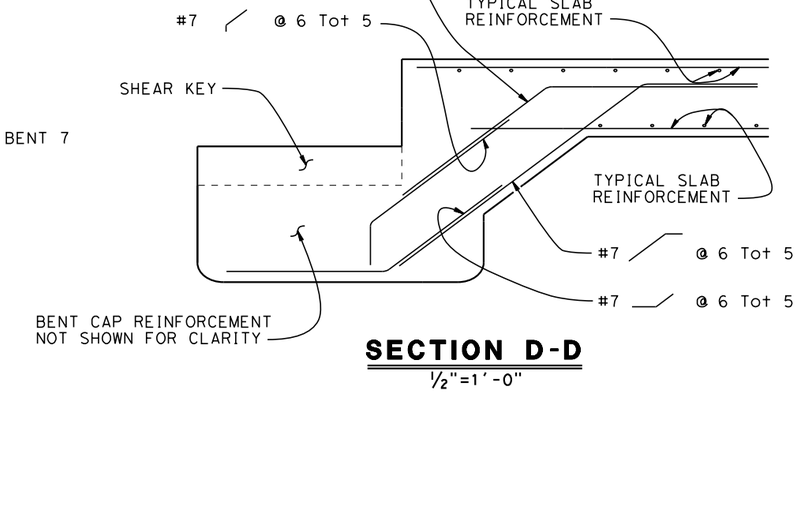

SECTION D-D
½"=1'-0"

65% SUBMITTAL, NOT FOR CONSTRUCTION

USERNAME => hhidalgo DATE PLOTTED => 3/20/2015 TIME PLOTTED => 1:00:53 PM

X
DESIGN OVERSIGHT
X
SIGN OFF DATE

	BY	CHECKED
DESIGN	B. Hansen	
DETAILS	H. Hidalgo	
QUANTITIES	M. Philipps	

PREPARED FOR
TEHAMA COUNTY
PUBLIC WORKS DEPARTMENT

Michael Wolohan
PROJECT ENGINEER

BRIDGE NO. 08C-0378
POST MILES X

SACRAMENTO OVERFLOW BRIDGE AT JELLYS FERRY ROAD
BENT DETAILS NO. 1

DESIGN DETAIL SHEET (ENGLISH) (REV. 03/14/12)

ORIGINAL SCALE IN INCHES FOR REDUCED PLANS 0 1 2 3

UNIT: X
PROJECT NUMBER & PHASE: X
CONTRACT NO.: X

DISREGARD PRINTS BEARING EARLIER REVISION DATES

REVISION DATES X

SHEET 12 OF 24

FILE => t:\sacramento\legacy\prj_file\710054 - jellys ferry bridge\500_engineering\520_structures\521_cadd\0540F_dgn\0540F-i-p07_zdet01.dgn

DIST	COUNTY	ROUTE	POST MILES TOTAL PROJECT	SHEET No	TOTAL SHEETS
02	TEH	CR		127	138

REGISTERED CIVIL ENGINEER DATE

PLANS APPROVAL DATE

REGISTERED PROFESSIONAL ENGINEER Brian Hansen No. 58976 Exp. 6/30/15 CIVIL STATE OF CALIFORNIA

T. Y. Lin International or its officers or agents shall not be responsible for the accuracy or completeness of scanned copies of this plan sheet.

T·Y·LIN INTERNATIONAL
1601 Response Road, Suite 260
SACRAMENTO, CA 95815

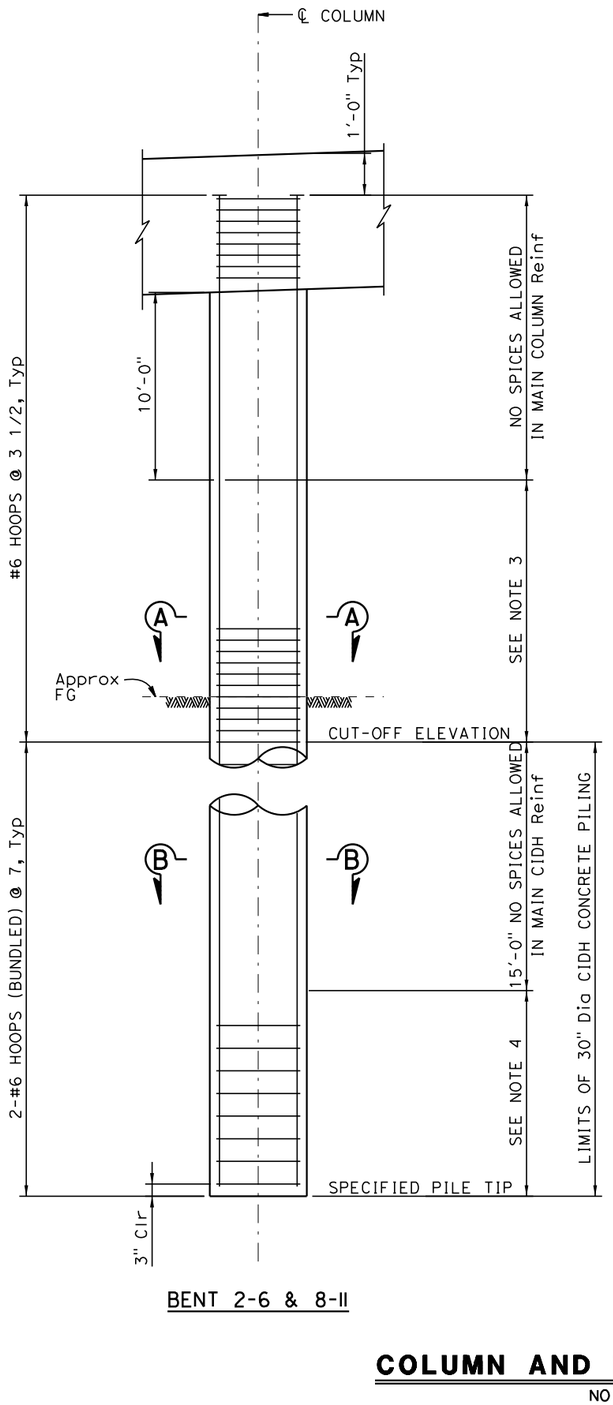

BENT 2-6 & 8-11

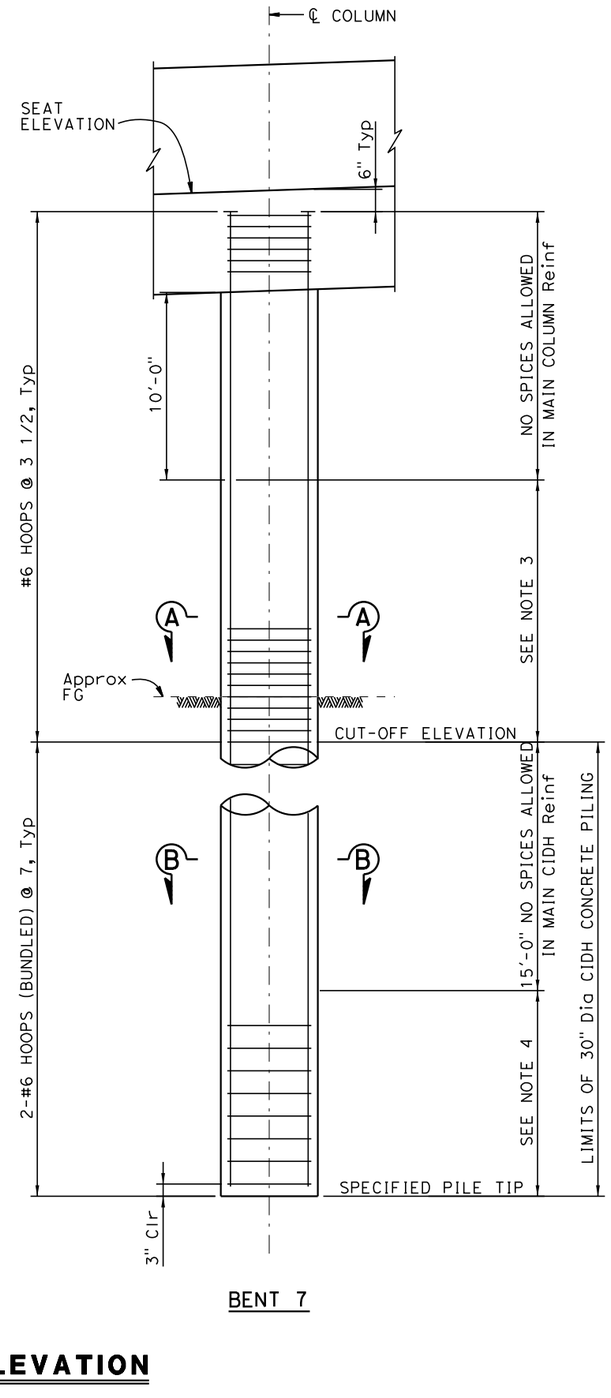

BENT 7

COLUMN AND PILE ELEVATION

NO SCALE

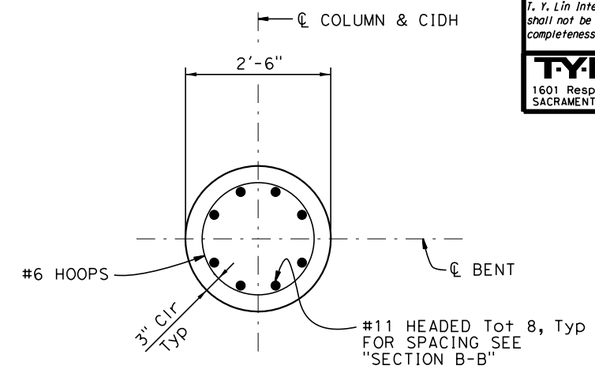

SECTION A-A

¾"=1'-0"

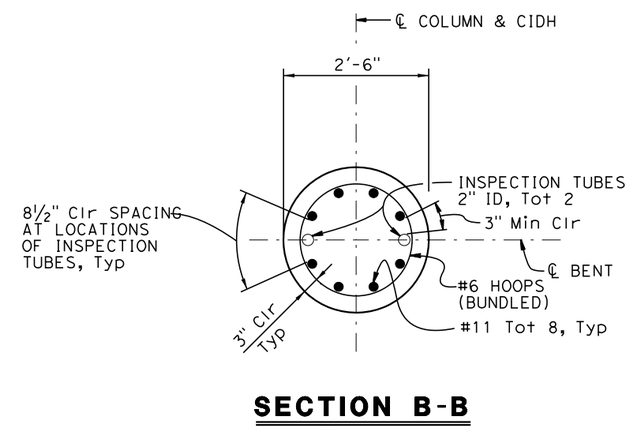

SECTION B-B

¾"=1'-0"

NOTES:

1. Typical Column and CIDH Pile reinforcement shown.
2. All Hoops are "ULTIMATE" Butt spliced continuous.
3. Only staggered "ULTIMATE" Butt splices are allowed in main Column reinforcement in this zone.
4. Only staggered "ULTIMATE" Butt splices are allowed in main CIDH Pile reinforcement in this zone.
5. For Pile Data Table, see "FOUNDATION PLAN NO. 1" sheet.

65% SUBMITTAL, NOT FOR CONSTRUCTION

X
DESIGN OVERSIGHT
X
SIGN OFF DATE

	BY	CHECKED
DESIGN	B. Hansen	
DETAILS	H. Hidalgo	
QUANTITIES	M. Philipps	

PREPARED FOR
TEHAMA COUNTY
PUBLIC WORKS DEPARTMENT

Michael Wolohan
PROJECT ENGINEER

BRIDGE NO. 08C-0378
POST MILES X

SACRAMENTO OVERFLOW BRIDGE AT JELLYS FERRY ROAD

BENT DETAILS NO. 2

DESIGN DETAIL SHEET (ENGLISH) (REV. 03/14/12)

ORIGINAL SCALE IN INCHES FOR REDUCED PLANS 0 1 2 3

UNIT: X
PROJECT NUMBER & PHASE: X
CONTRACT NO.: X

DISREGARD PRINTS BEARING EARLIER REVISION DATES

REVISION DATES X

SHEET 13 OF 24

FILE => t:\sacramento\legacy\proj_file\710054 - jellys ferry bridge\500_engineering\520_structures\521_cadd\0540F_dgn\0540F-i-p07_zdet02.dgn

USERNAME => hhidalgo DATE PLOTTED => 3/20/2015 TIME PLOTTED => 1:00:55 PM

DIST	COUNTY	ROUTE	POST MILES TOTAL PROJECT	SHEET No	TOTAL SHEETS
02	TEH	CR		128	138

REGISTERED CIVIL ENGINEER DATE

PLANS APPROVAL DATE

REGISTERED PROFESSIONAL ENGINEER Brian Hansen No. 58976 Exp. 6/30/15 CIVIL STATE OF CALIFORNIA

T. Y. Lin International or its officers or agents shall not be responsible for the accuracy or completeness of scanned copies of this plan sheet.

T·Y·LIN INTERNATIONAL
1601 Response Road, Suite 260
SACRAMENTO, CA 95815

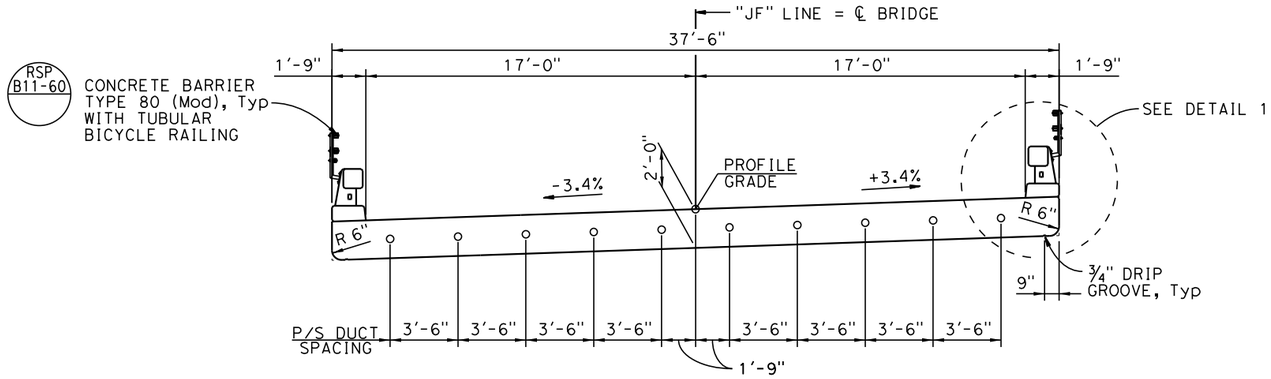

TYPICAL SECTION

¼" = 1'-0"

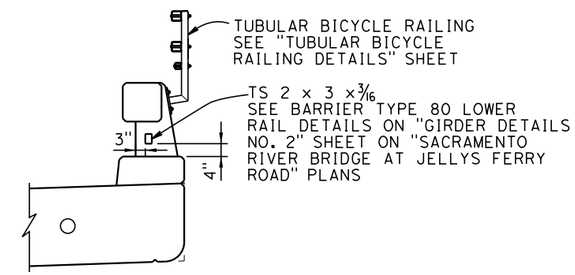

DETAIL 1

½"=1'-0"

NOTES:

1. Place perpendicular to edge of deck, space along "JF" Line.
2. Place parallel to "JF" Line.

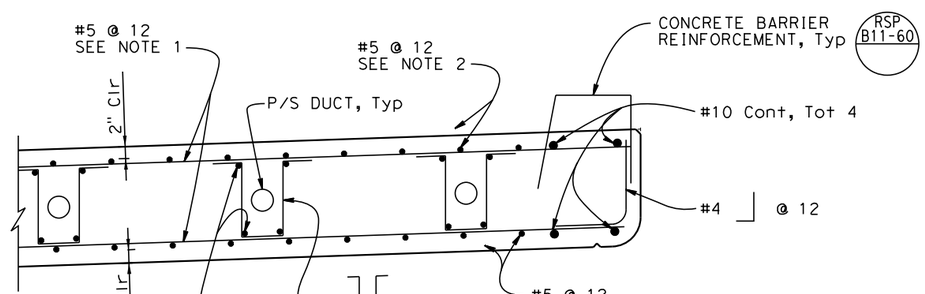

PART TYPICAL SECTION

¾"=1'-0"

65% SUBMITTAL, NOT FOR CONSTRUCTION

X DESIGN OVERSIGHT	DESIGN	BY B. Hansen	CHECKED
X SIGN OFF DATE	DETAILS	BY H. Hidalgo	CHECKED
	QUANTITIES	BY M. Philipps	CHECKED

PREPARED FOR
TEHAMA COUNTY
PUBLIC WORKS DEPARTMENT

Michael Wolohan
PROJECT ENGINEER

BRIDGE NO. 08C-0378
POST MILES X

SACRAMENTO OVERFLOW BRIDGE AT JELLYS FERRY ROAD
TYPICAL SECTION

DESIGN DETAIL SHEET (ENGLISH) (REV. 03/14/12)

ORIGINAL SCALE IN INCHES FOR REDUCED PLANS 0 1 2 3

UNIT: X
PROJECT NUMBER & PHASE: X
CONTRACT NO.: X

DISREGARD PRINTS BEARING EARLIER REVISION DATES

REVISION DATES X

SHEET 14 OF 24

FILE => t:\sacramento\legacy\prj_file\710054 - jellys ferry bridge\500_engineering\520_structures\521_cadd\0540F_dgn\0540F-k-ts01.dgn

USERNAME => hhidalgo DATE PLOTTED => 3/20/2015 TIME PLOTTED => 11:00:57 PM

DIST	COUNTY	ROUTE	POST MILES TOTAL PROJECT	SHEET No	TOTAL SHEETS
02	TEH	CR		129	138

REGISTERED CIVIL ENGINEER DATE

PLANS APPROVAL DATE

REGISTERED PROFESSIONAL ENGINEER Brian Hansen No. 58976 Exp. 6/30/15 CIVIL STATE OF CALIFORNIA

T. Y. Lin International or its officers or agents shall not be responsible for the accuracy or completeness of scanned copies of this plan sheet.

T·Y·LIN INTERNATIONAL
1601 Response Road, Suite 260
SACRAMENTO, CA 95815

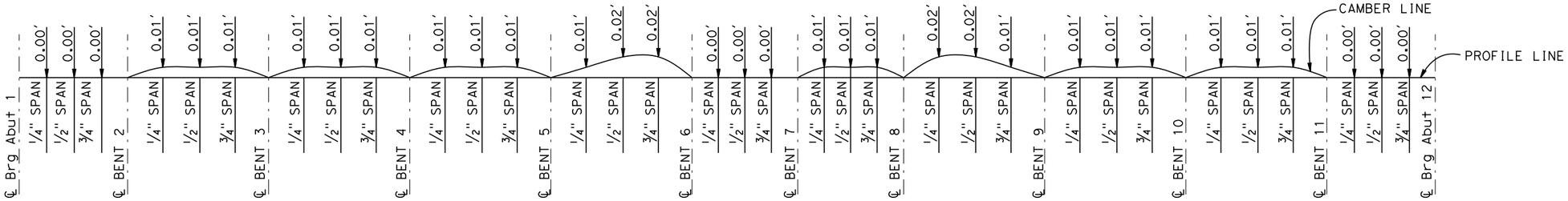

CAMBER DIAGRAM

No Scale

NOTE:
CAMBER DOES NOT INCLUDE ALLOWANCE FOR FALSEWORK SETTLEMENT.

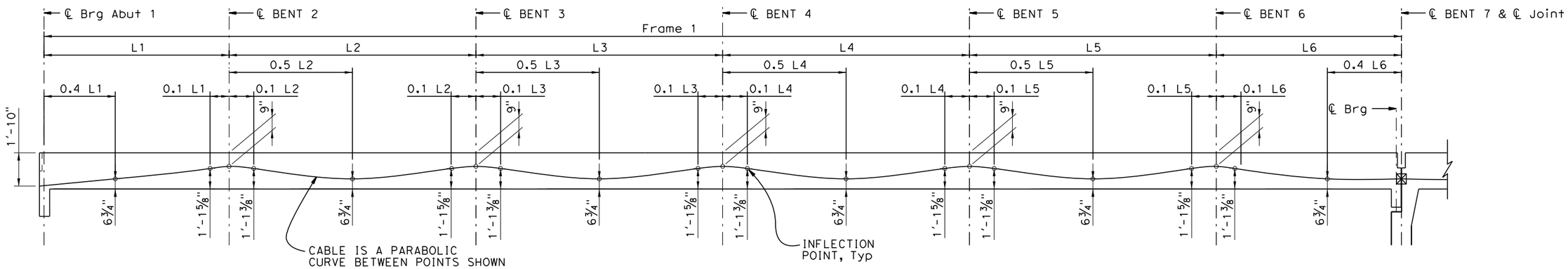

LONGITUDINAL ELEVATION

No Scale

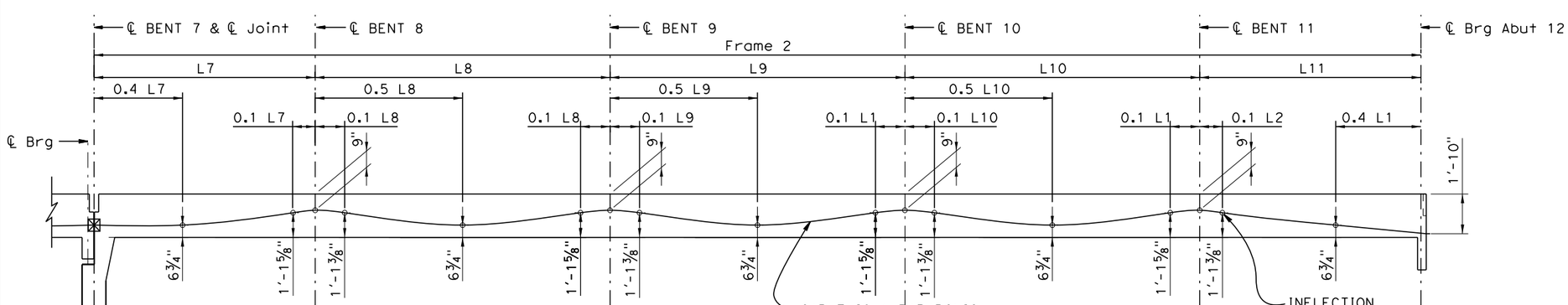

LONGITUDINAL ELEVATION

No Scale

PRESTRESSING NOTES

270 ksi Low Relaxation Strand:

P_{jack}	= 9,400	kips (Frame 1)
	= 8,600	kips (Frame 2)
Anchor Set	⅜	in
Number of P/S Ducts	= 10 (Frame 1)	
	= 10 (Frame 2)	

Distribution of prestress force (Pjack) between tendons shall not exceed the ratio of 3:2.

Concrete: f'c = 5.0ksi @ 28 days

f'ci= 3.6ksi @ time of stressing.

Contractor shall submit elongation calculations based on initial stress at

☒ = 0.811 times jacking stress (Frame 1)
= 0.843 times jacking stress (Frame 2)

One End Stressing shall be performed, from Abutments.

Design is based on μ 0.15 and k= 0.0002/ft loss coefficients.

65% SUBMITTAL, NOT FOR CONSTRUCTION

X DESIGN OVERSIGHT	DESIGN	BY B. Hansen	CHECKED
X SIGN OFF DATE	DETAILS	BY H. Hidalgo	CHECKED
	QUANTITIES	BY M. Philipps	CHECKED

PREPARED FOR
TEHAMA COUNTY
PUBLIC WORKS DEPARTMENT

Michael Wolohan
PROJECT ENGINEER

BRIDGE NO. 08C-0378
POST MILES X

SACRAMENTO OVERFLOW BRIDGE AT JELLYS FERRY ROAD

CONCRETE SLAB DETAILS NO.1

DESIGN DETAIL SHEET (ENGLISH) (REV. 03/14/12)

ORIGINAL SCALE IN INCHES FOR REDUCED PLANS 0 1 2 3

UNIT: X
PROJECT NUMBER & PHASE: X
CONTRACT NO.: X

DISREGARD PRINTS BEARING EARLIER REVISION DATES

REVISION DATES X

SHEET 15 OF 24

FILE => t:\sacramento\legacy\pri_file\710054 - jellys ferry bridge\500_engineering\520_structures\521_cadd\0540F_dgn\0540F-k-tsdet01.dgn

USERNAME => nhidalgo DATE PLOTTED => 3/20/2015 TIME PLOTTED => 1:00:59 PM

DIST	COUNTY	ROUTE	POST MILES TOTAL PROJECT	SHEET No	TOTAL SHEETS
02	TEH	CR		130	138

REGISTERED CIVIL ENGINEER DATE

PLANS APPROVAL DATE

REGISTERED PROFESSIONAL ENGINEER Brian Hansen No. 58976 Exp. 6/30/15 CIVIL STATE OF CALIFORNIA

T. Y. Lin International or its officers or agents shall not be responsible for the accuracy or completeness of scanned copies of this plan sheet.

T·Y·LIN INTERNATIONAL
1601 Response Road, Suite 260
SACRAMENTO, CA 95815

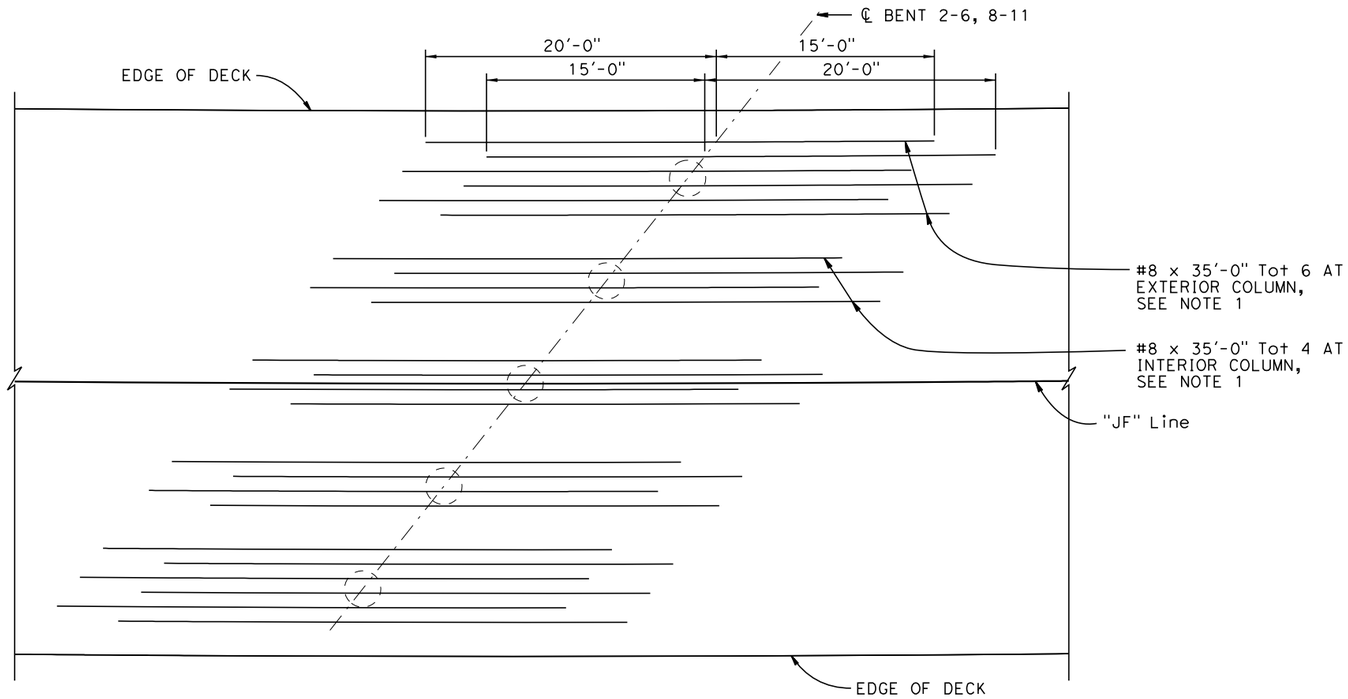

ADDITIONAL TOP AND BOTTOM REINFORCEMENT

NO SCALE

NOTES:

1. Bundle with #5 continuous bars top and bottom.
2. Stagger 50% of top and bottom typical slab reinforcement lap splices over dimension shown.
3. No lap spice allowed.
4. Service coupler permitted anywhere within span.

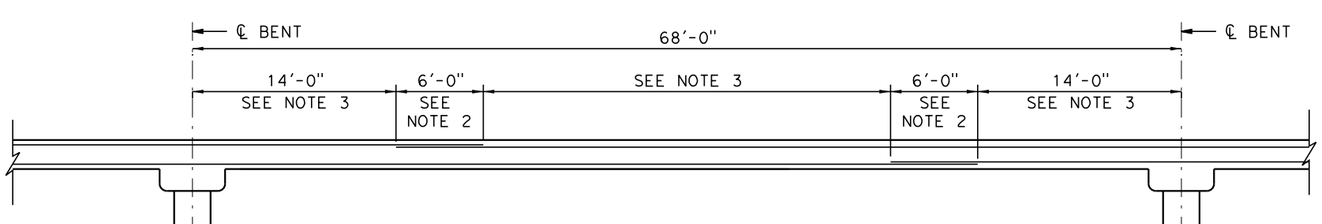

LAP SPLICE LOCATIONS - LONGITUDINAL SLAB REINFORCEMENT

No Scale

65% SUBMITTAL, NOT FOR CONSTRUCTION

USERNAME => hhidalgo DATE PLOTTED => 3/20/2015 TIME PLOTTED => 1:01:01 PM

X
DESIGN OVERSIGHT
X
SIGN OFF DATE

	BY	CHECKED
DESIGN	B. Hansen	
DETAILS	H. Hidalgo	
QUANTITIES	M. Philipps	

PREPARED FOR
TEHAMA COUNTY
PUBLIC WORKS DEPARTMENT

Michael Wolohan
PROJECT ENGINEER

BRIDGE NO. 08C-0378
POST MILES X

SACRAMENTO OVERFLOW BRIDGE AT JELLYS FERRY ROAD
CONCRETE SLAB DETAILS NO.2

DESIGN DETAIL SHEET (ENGLISH) (REV. 03/14/12)

ORIGINAL SCALE IN INCHES FOR REDUCED PLANS 0 1 2 3

UNIT: X
PROJECT NUMBER & PHASE: X
CONTRACT NO.: X

DISREGARD PRINTS BEARING EARLIER REVISION DATES

REVISION DATES X

SHEET 16 OF 24

FILE => t:\sacramento\legacy\prj_file\710054 - jellys ferry bridge\500_engineering\520_structures\521_cadd\0540F_dgn\0540F-k-tsdet02.dgn

DIST	COUNTY	ROUTE	POST MILES TOTAL PROJECT	SHEET No	TOTAL SHEETS
02	TEH	CR		131	138

REGISTERED CIVIL ENGINEER DATE

PLANS APPROVAL DATE

REGISTERED PROFESSIONAL ENGINEER Brian Hansen No. 58976 Exp. 6/30/15 CIVIL STATE OF CALIFORNIA

T. Y. Lin International or its officers or agents shall not be responsible for the accuracy or completeness of scanned copies of this plan sheet.

T·Y·LIN INTERNATIONAL
1601 Response Road, Suite 260
SACRAMENTO, CA 95815

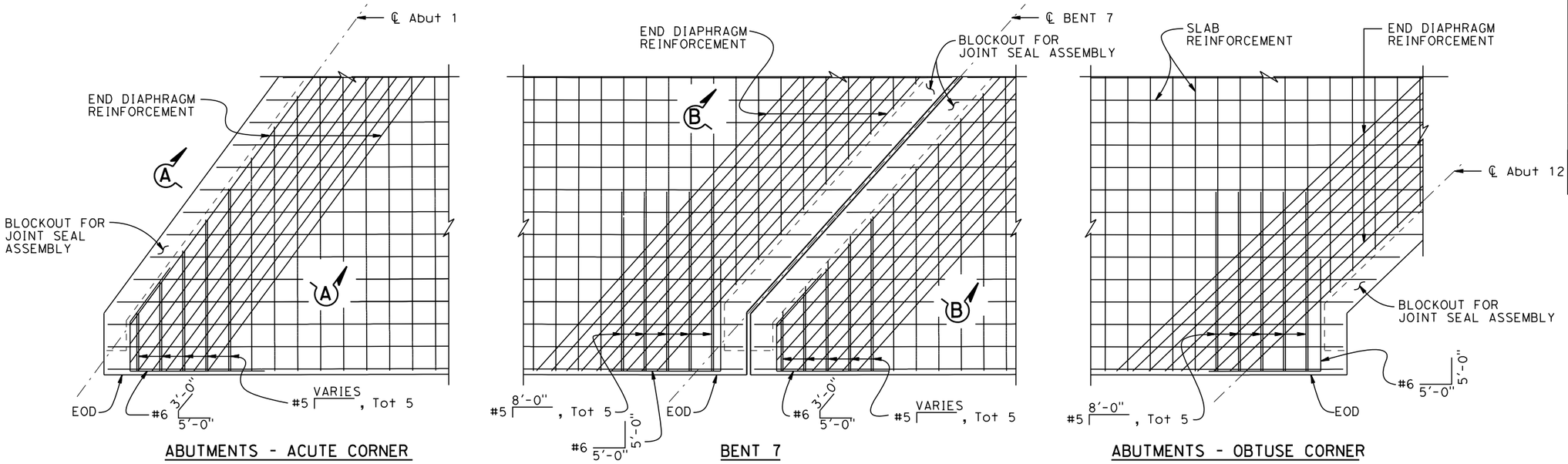

PLAN - TOP SLAB REINFORCEMENT AT ABUTMENTS AND BENT 7

3/8"=1'-0"

NOTES:

1. For "SECTION A-A" and "SECTION B-B" see "CONCRETE SLAB DETAILS NO. 4" sheet.

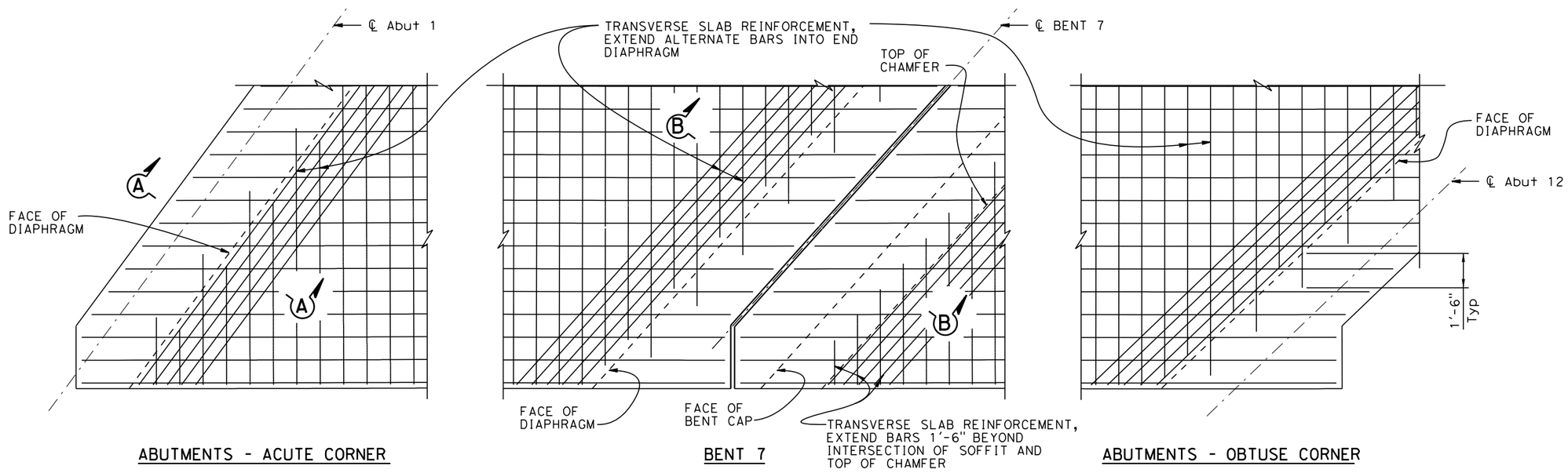

PLAN - BOTTOM SLAB REINFORCEMENT AT ABUTMENTS AND BENT 7

3/8"=1'-0"

65% SUBMITTAL, NOT FOR CONSTRUCTION

USERNAME => phidalgo DATE PLOTTED => 3/20/2015 TIME PLOTTED => 1:01:03 PM

X DESIGN OVERSIGHT	DESIGN	BY B. Hansen	CHECKED	PREPARED FOR TEHAMA COUNTY PUBLIC WORKS DEPARTMENT	Michael Wolohan PROJECT ENGINEER
X SIGN OFF DATE	DETAILS	BY H. Hidalgo	CHECKED		BRIDGE NO. 08C-0378
	QUANTITIES	BY M. Philipps	CHECKED		POST MILES X

SACRAMENTO OVERFLOW BRIDGE AT JELLYS FERRY ROAD

CONCRETE SLAB DETAILS NO.3

DESIGN DETAIL SHEET (ENGLISH) (REV. 03/14/12)

ORIGINAL SCALE IN INCHES FOR REDUCED PLANS 0 1 2 3

UNIT: X
PROJECT NUMBER & PHASE: X
CONTRACT NO.: X

DISREGARD PRINTS BEARING EARLIER REVISION DATES

REVISION DATES X

SHEET 17 OF 24

FILE => t:\sacramento\legacy\pri_file\710054 - jellys ferry bridge\500_engineering\520_structures\521_cadd\0540F_dgn\0540F-k-tsdet03.dgn

DIST	COUNTY	ROUTE	POST MILES TOTAL PROJECT	SHEET No	TOTAL SHEETS
02	TEH	CR		132	138

REGISTERED CIVIL ENGINEER DATE

PLANS APPROVAL DATE

REGISTERED PROFESSIONAL ENGINEER
Brian Hansen
No. 58976
Exp. 6/30/15
CIVIL
STATE OF CALIFORNIA

T. Y. Lin International or its officers or agents shall not be responsible for the accuracy or completeness of scanned copies of this plan sheet.

T·Y·LIN INTERNATIONAL
1601 Response Road, Suite 260
SACRAMENTO, CA 95815

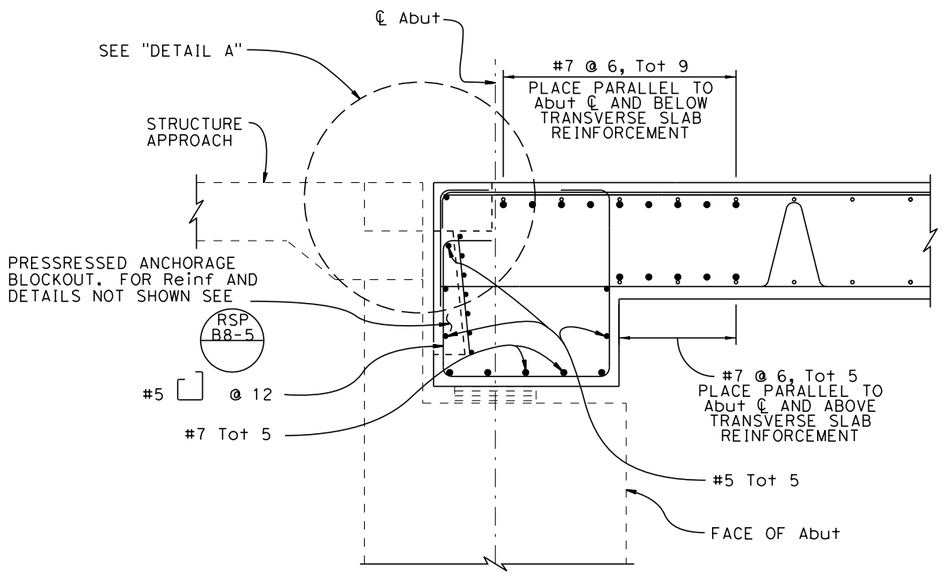

Abut 1 SHOWN
Abut 12 SIMILAR

SECTION A-A
¾"=1'-0"

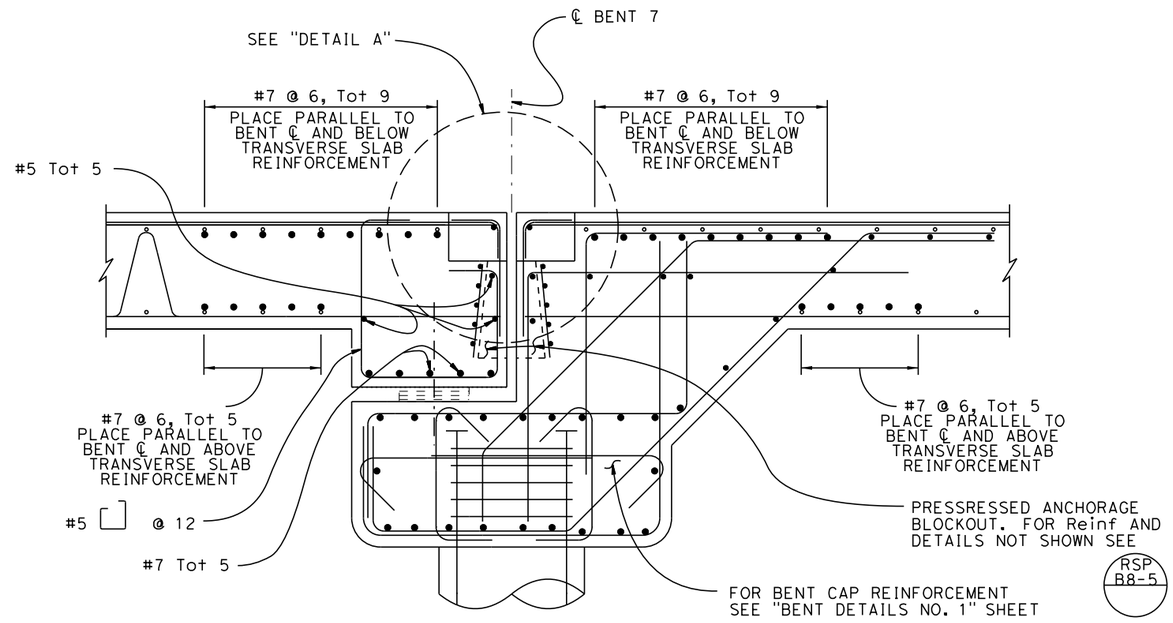

SECTION B-B
¾"=1'-0"

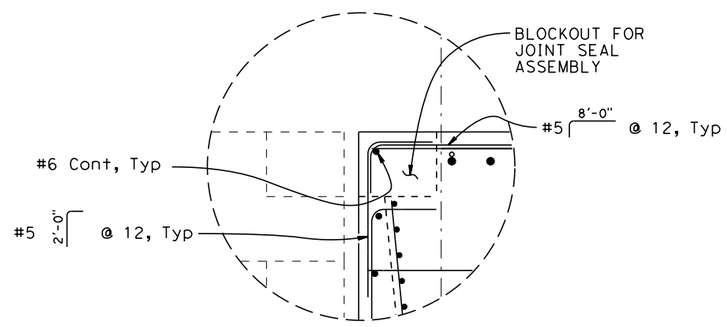

DETAIL A
1"=1'-0"

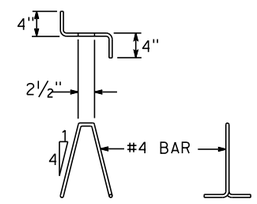

BAR CHAIR DETAIL
No Scale

65% SUBMITTAL, NOT FOR CONSTRUCTION

X DESIGN OVERSIGHT		DESIGN	BY B. Hansen	CHECKED	
X SIGN OFF DATE		DETAILS	BY H. Hidalgo	CHECKED	
		QUANTITIES	BY M. Philipps	CHECKED	

PREPARED FOR
TEHAMA COUNTY
PUBLIC WORKS DEPARTMENT

Michael Wolohan
PROJECT ENGINEER

BRIDGE NO. 08C-0378
POST MILES X

SACRAMENTO OVERFLOW BRIDGE AT JELLYS FERRY ROAD
CONCRETE SLAB DETAILS NO.4

DESIGN DETAIL SHEET (ENGLISH) (REV. 03/14/12)

ORIGINAL SCALE IN INCHES FOR REDUCED PLANS 0 1 2 3

UNIT: X
PROJECT NUMBER & PHASE: X
CONTRACT NO.: X

DISREGARD PRINTS BEARING EARLIER REVISION DATES

REVISION DATES X

SHEET 18 OF 24

FILE => t:\sacramento\legacy\pri_file\710054 - jellys ferry bridge\500_engineering\520_structures\521_cadd\0540F_dgn\0540F-k-tsdet04.dgn

USERNAME => hhidalgo DATE PLOTTED => 3/20/2015 TIME PLOTTED => 1:01:06 PM

DIST	COUNTY	ROUTE	POST MILES TOTAL PROJECT	SHEET No.	TOTAL SHEETS
02	TEH	CR		133	138

REGISTERED CIVIL ENGINEER DATE

PLANS APPROVAL DATE

REGISTERED PROFESSIONAL ENGINEER Brian Hansen No. x Exp. x CIVIL STATE OF CALIFORNIA

The State of California or its officers or agents shall not be responsible for the accuracy or completeness of electronic copies of this plan sheet.

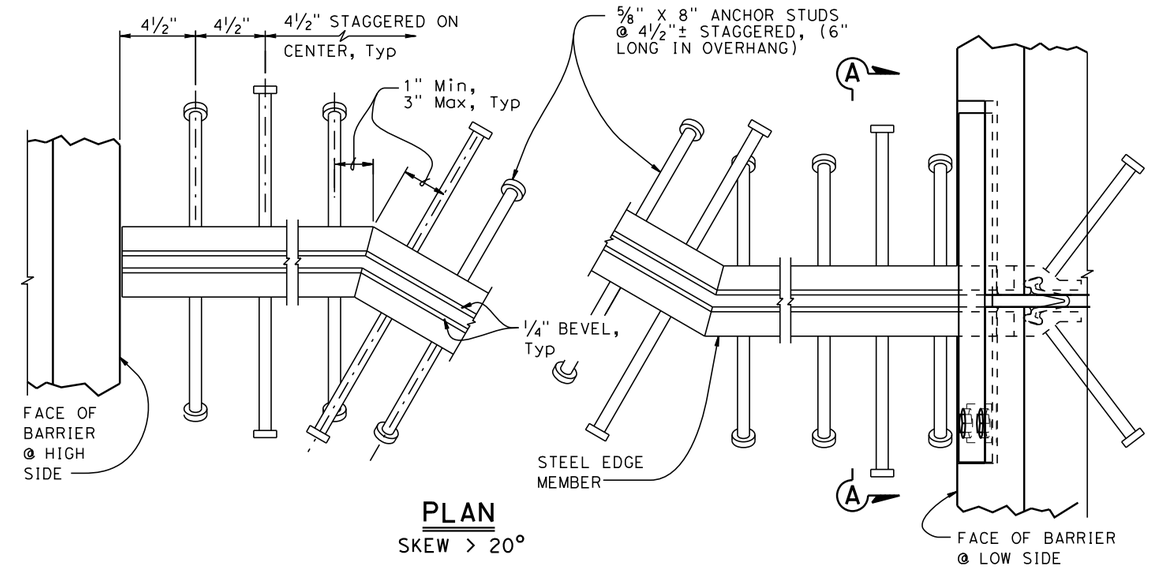

PLAN
SKEW > 20°

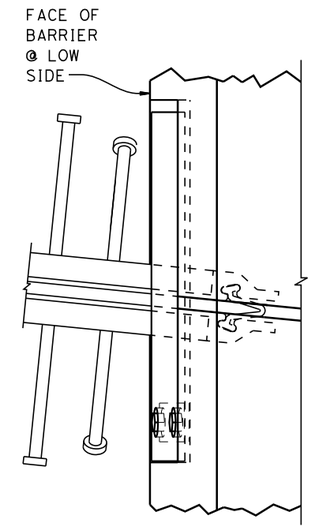

PLAN
SKEW ≤ 20°

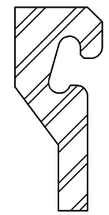

SCHEMATIC STEEL EDGE MEMBER

NOTES:

1. Alternatively, fillet or complete penetration welds may be used at anchor studs.
2. Alternate types of anchor studs may be permitted subject to the authorization by the Engineer.
3. Joint seal assembly to be used in conjunction with closure pour. (See other sheets for limits). Closure pour shall not be placed until final deck surface is within the tolerances specified.
4. Use joint at crown of roadway, at any change in traverse slope in deck and at changes in horizontal direction. Place other joints at or near lanes. All metal parts to be painted or galvanized after fabrication.
5. Sheet Neoprene shall be fabricated in one continuous piece and shall be fabricated to bend around corners. Field splices of the neoprene are not allowed.
6. Insert assembly or expansion anchorage for 5/8" x 1¾" bolts. Use installation bolts extended ½" minimum past nut and coat with bond breaker, after concrete has cured, remove installation bolts, install HS bolts and sheet neoprene.
7. Sidewalk Detail similar to Barrier Detail on low side at both sides if the roadway is crowned or if the difference in elevation between the ends of the seal is 0.5′ or less.
8. a_c, a_s, are the thermal expansion coefficients for concrete and steel respectively.
9. Anchor studs shall conform to ASTM 108.

JOINT INFORMATION			"a" DIMENSIONS		
LOCATION	MOVEMENT RATING (MR)	SKEW	WINTER	SPRING & FALL	SUMMER
Abut 1	4	36°38′03"			
BENT 7	4	42°02′60"			
Abut 12	4	46°29′03"			

* TO SET MINIMUM JOINT OPENING "W"

$$"W" = \begin{cases} \tfrac{1}{2}" + [(\text{Max Str temperature in °F}) - (\text{actual Str temperature in °F})] * (a_c \text{ or } a_s)(12)(\text{contributory L in feet}) \\ \tfrac{1}{2}" \text{ Minimum} \\ a_c = 0.0000060 \\ a_s = 0.0000065 \end{cases}$$

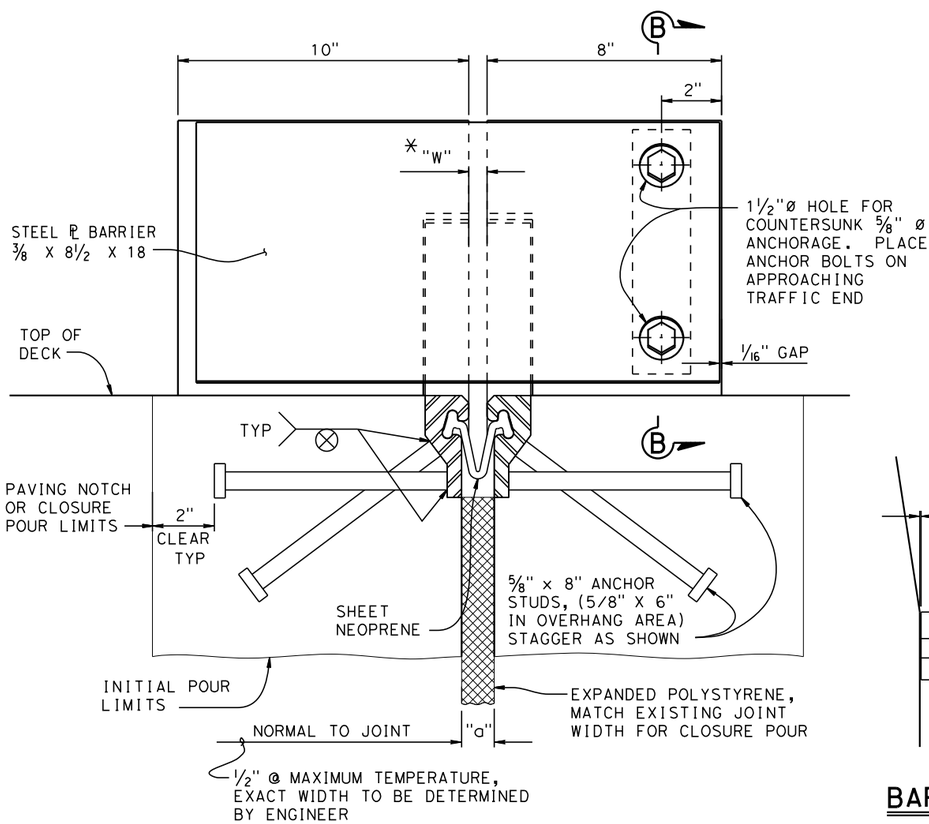

SECTION A-A

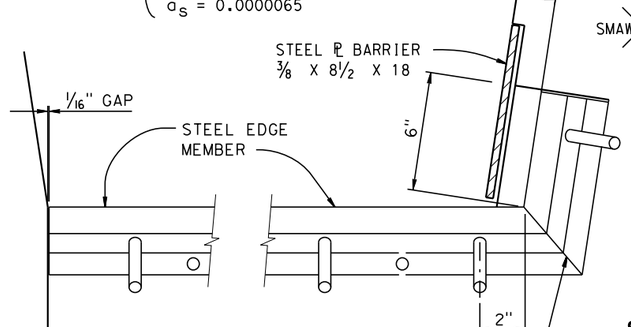

BARRIER DETAIL HIGH SIDE

BARRIER DETAIL LOW SIDE

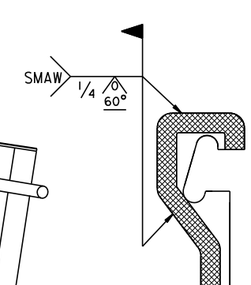

SCHEMATIC FIELD WELD DETAIL

NOTE:
SHADED AREAS TO BE WELDED

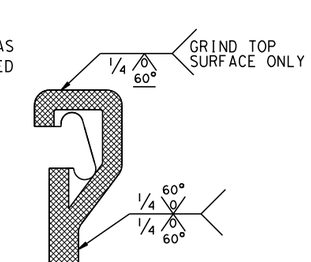

SCHEMATIC SHOP WELD DETAIL

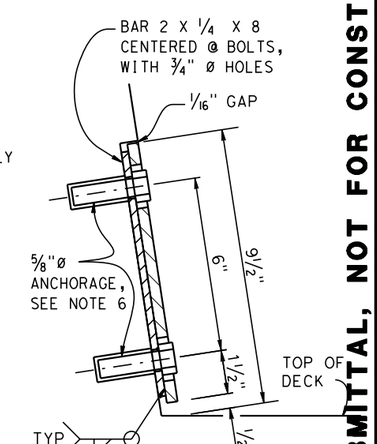

SECTION B-B

NO SCALE

65% SUBMITTAL, NOT FOR CONSTRUCTION

USERNAME => nhidalgo DATE PLOTTED => 3/20/2015 TIME PLOTTED => 1:01:08 PM

SACRAMENTO OVERFLOW BRIDGE AT JELLYS FERRY ROAD

STRIP JOINT SEAL ASSEMBLY

MAXIMUM MOVEMENT RATING = 4"

STANDARD DRAWING

FILE NO. xs8-010

APPROVAL DATE July 2014

STATE OF CALIFORNIA DEPARTMENT OF TRANSPORTATION

DIVISION OF ENGINEERING SERVICES

BRIDGE NO. 08C-0378

POST MILE

DS OSD 2147A (ENGLISH STANDARD DRAWING "XS" BORDER REV. (02-02-11)

ORIGINAL SCALE IN INCHES FOR REDUCED PLANS 0 1 2 3

UNIT: X
PROJECT NUMBER & PHASE: X
CONTRACT NO.: X

DISREGARD PRINTS BEARING EARLIER REVISION DATES

REVISION DATES 6-23-14

SHEET 19 OF 24

FILE => t:\sacramento\legacy\pri_file\710054 - jellys ferry bridge\500_engineering\520_structures\521_cadd\0540F_dgn\0540F-g-01xs08-810.dgn

DIST	COUNTY	ROUTE	POST MILES TOTAL PROJECT	SHEET No.	TOTAL SHEETS
02	TEH	CR		134	138

REGISTERED CIVIL ENGINEER DATE

PLANS APPROVAL DATE

REGISTERED PROFESSIONAL ENGINEER Brian Hansen No. x Exp. x CIVIL STATE OF CALIFORNIA

The State of California or its officers or agents shall not be responsible for the accuracy or completeness of electronic copies of this plan sheet.

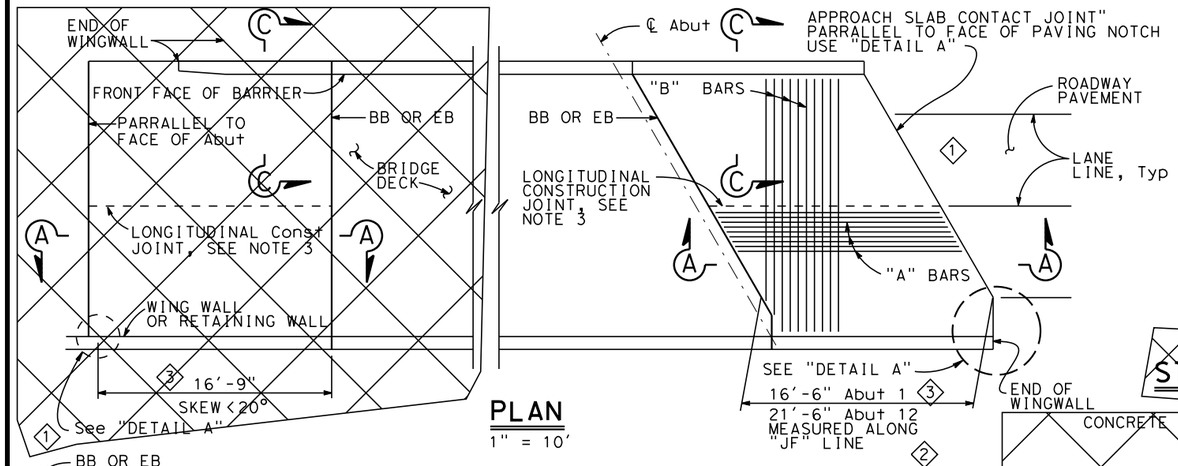

PLAN

1" = 10'

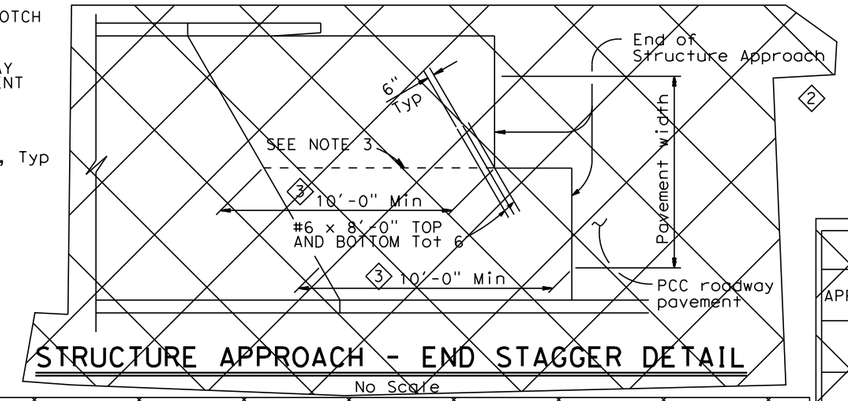

STRUCTURE APPROACH - END STAGGER DETAIL

No Scale

APPROACH SLAB TRANSVERSE CONTACT JOINT		
APPROACH SKEW	WITH AC ROADWAY PAVEMENT	WITH PCC ROADWAY PAVEMENT
< 20°	PARALLEL TO FACE OF PN	PARALLEL TO FACE OF PN
20° - 45°	PARALLEL TO FACE OF PN USE "DETAIL A"	STAGGER LINES 24' TO 36' APART
> 45°	PARALLEL TO FACE OF PN USE "DETAIL A"	STAGGER AT EACH LANE LINE

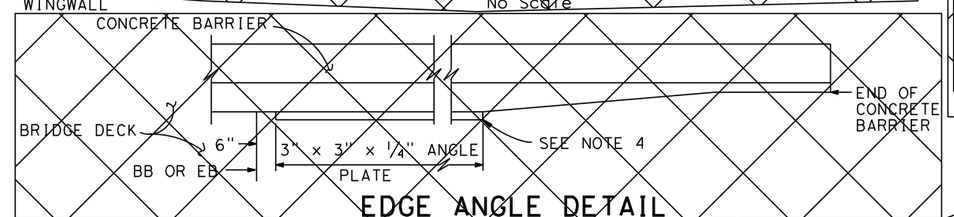

EDGE ANGLE DETAIL

1/2"=1'-0"

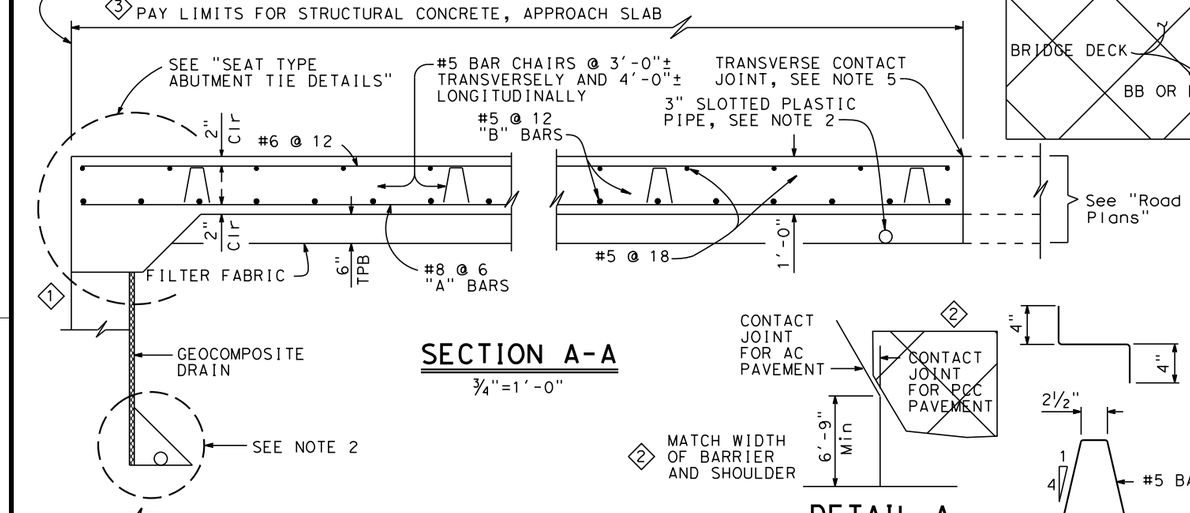

SECTION A-A

3/4"=1'-0"

DETAIL A

No Scale

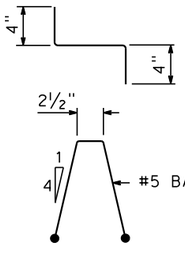

BAR CHAIR DETAIL

1 1/2"=1'-0"

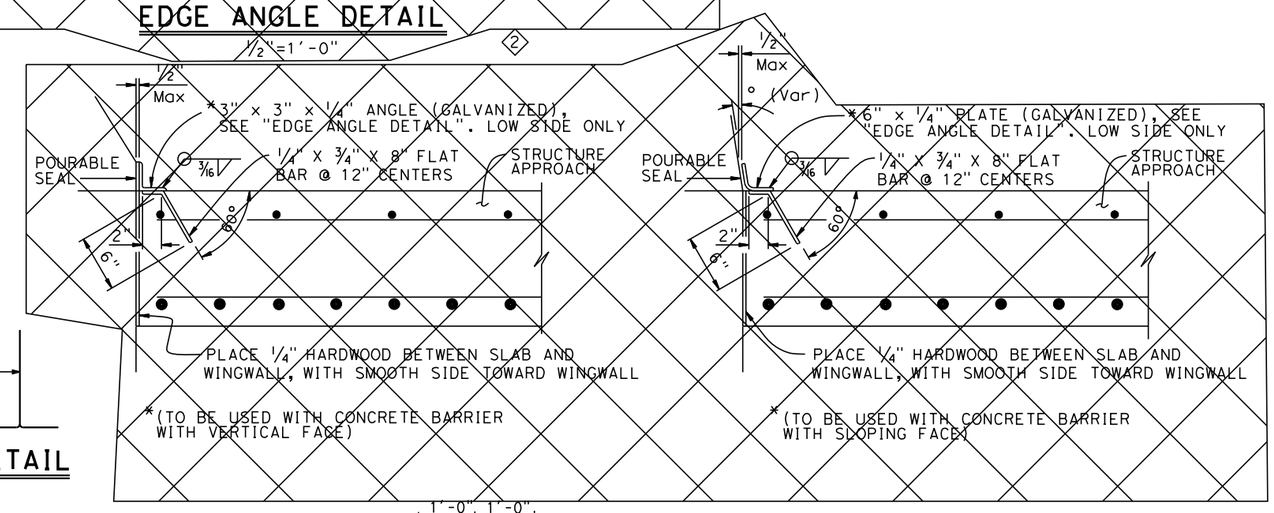

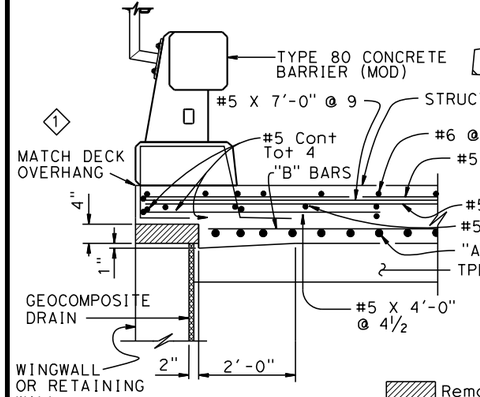

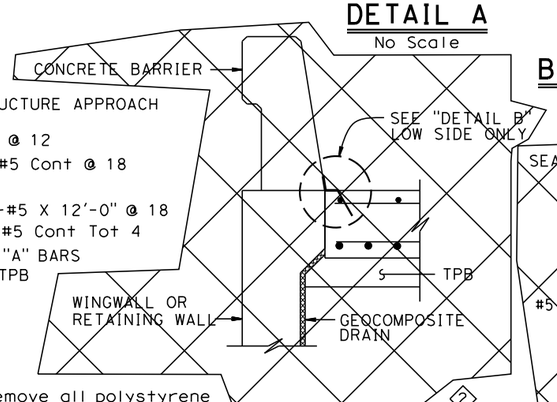

Remove all polystyrene

SECTION C-C

3/4"=1'-0"

(Type E-1 to be used, unless otherwise shown on plans)

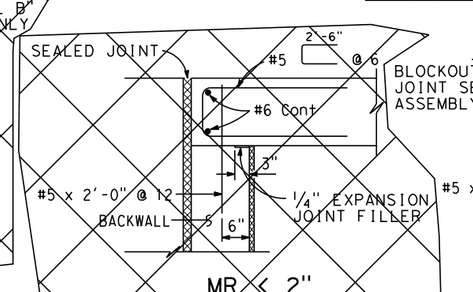

MR ≤ 2"

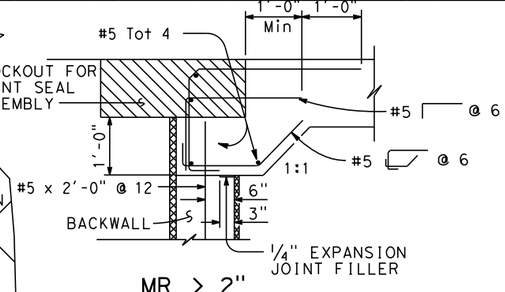

MR > 2"

SEAT TYPE ABUTMENT TIE DETAILS (SEE NOTE 1)

3/4"=1'-0"

NOTES:

1. For details not shown, see Structure Plans. For MR ≤ 2", adjust bar reinforcement to clear a sawcut for sealed joint, when required
2. For drainage details, see "STRUCTURE APPROACH DRAINAGE DETAILS" sheet
3. Longitudinal construction joints, when permitted by the Engineer, shall be located on lane lines
4. End angle or plate at beginning of barrier transition, end of wingwall or end of structure approach as applicable
5. For transverse contact joint with new PCC paving, refer to Standard Plan P10
6. At the Contractor's option, approach slab transverse reinforcement may be placed parallel to paving notch. Spacing of transverse reinforcement is measured along ℄ roadway

65% SUBMITTAL, NOT FOR CONSTRUCTION

STANDARD DRAWING

FILE NO. xs3-120

APPROVAL DATE July 2011

1. Detail Modified
2. Detail not part of contract
3. Dimensions Modified

PREPARED FOR TEHAMA COUNTY PUBLIC WORKS DEPARTMENT

DIVISION OF ENGINEERING SERVICES

BRIDGE NO. 08C-0378

POST MILE

SACRAMENTO OVERFLOW BRIDGE AT JELLYS FERRY ROAD

STRUCTURE APPROACH TYPE N(30S) (MOD)

DS OSD 2147A (ENGLISH STANDARD DRAWING "XS" BORDER REV. (02-02-11)

ORIGINAL SCALE IN INCHES FOR REDUCED PLANS 0 1 2 3

UNIT: X

PROJECT NUMBER & PHASE:

CONTRACT NO.: X

DISREGARD PRINTS BEARING EARLIER REVISION DATES

REVISION DATES

SHEET 20 OF 24

FILE => t:\sacramento\legacy\prj_file\710054 - jellys ferry bridge\500_engineering\520_structures\521_cadd\0540F_dgn\0540F-s-01xs3-120.dgn

USERNAME => phidalgo DATE PLOTTED => 3/20/2015 TIME PLOTTED => 1:01:10 PM

DIST	COUNTY	ROUTE	POST MILES TOTAL PROJECT	SHEET No.	TOTAL SHEETS
02	TEH	CR		135	138

REGISTERED CIVIL ENGINEER DATE

PLANS APPROVAL DATE

REGISTERED PROFESSIONAL ENGINEER Brian Hansen No. x Exp. x CIVIL STATE OF CALIFORNIA

The State of California or its officers or agents shall not be responsible for the accuracy or completeness of electronic copies of this plan sheet.

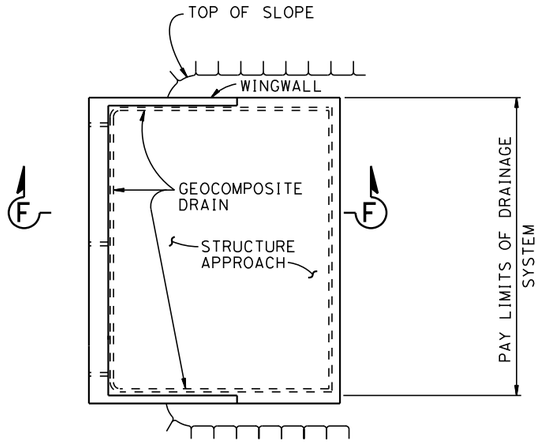

① TYPICAL PLAN

1" = 10'

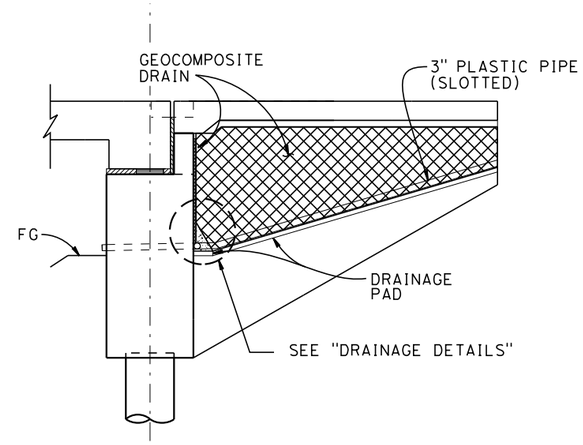

CANTILEVER WINGWALL

① SECTION F-F

NO SCALE

②

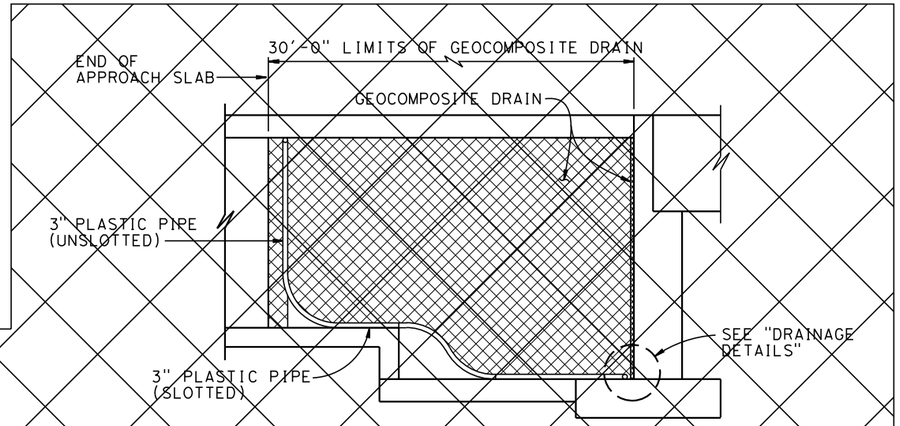

RETAINING WALL WINGWALL DRAINAGE DETAILS

SECTION G-G

1/4" = 1'-0"

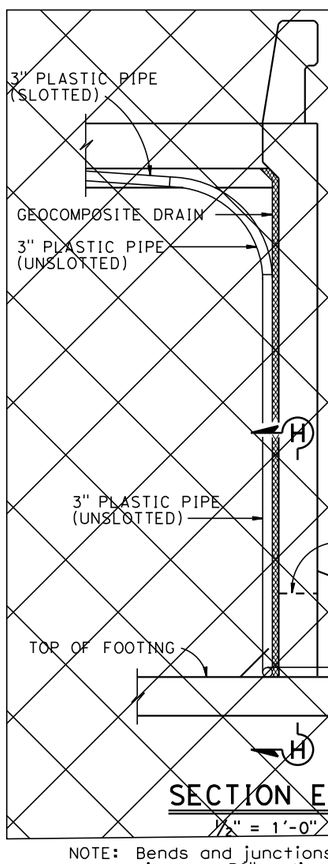

SECTION E-E

1/2" = 1'-0"

NOTE: Bends and junctions in 3" plastic pipe are 30" radius Min

* FOR PIPE LAYOUT AT STAGGERED END, SEE "DETAIL B"

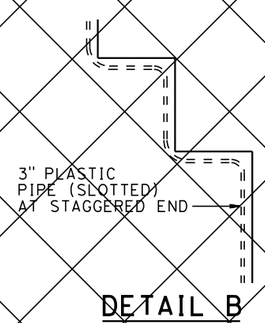

DETAIL B

No Scale

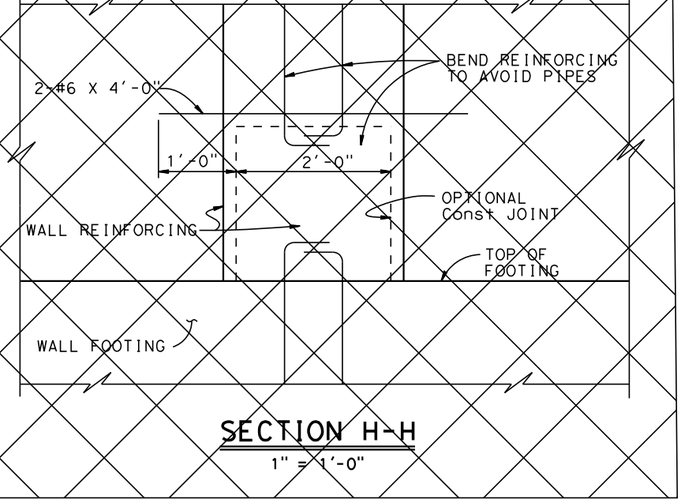

SECTION H-H

1" = 1'-0"

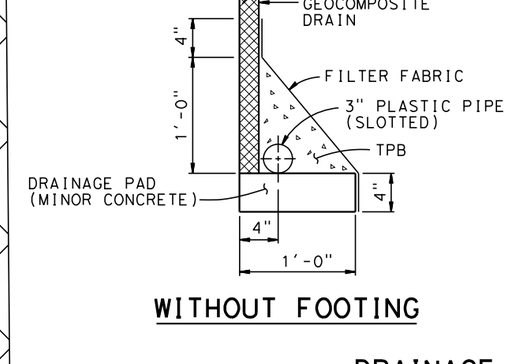

WITHOUT FOOTING

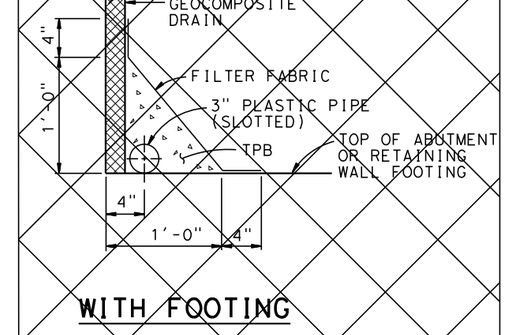

WITH FOOTING

DRAINAGE DETAILS

1 1/2" = 1'-0"

65% SUBMITTAL, NOT FOR CONSTRUCTION

STANDARD DRAWING					
FILE NO. xs3-110	APPROVAL DATE July 2011	① Detail Modified ② Detail not part of contract	PREPARED FOR TEHAMA COUNTY PUBLIC WORKS DEPARTMENT	DIVISION OF ENGINEERING SERVICES	BRIDGE NO. 08C-0378 POST MILE

SACRAMENTO OVERFLOW BRIDGE AT JELLYS FERRY ROAD

STRUCTURE APPROACH DRAINAGE DETAILS

DS OSD 2147A (ENGLISH STANDARD DRAWING "XS" BORDER REV. (02-02-11)

ORIGINAL SCALE IN INCHES FOR REDUCED PLANS 0 1 2 3

UNIT: X
PROJECT NUMBER & PHASE: CONTRACT NO.: X

DISREGARD PRINTS BEARING EARLIER REVISION DATES

REVISION DATES

SHEET 21 OF 24

FILE => t:\sacramento\legacy\prj_file\710054 - jellys ferry bridge\500_engineering\520_structures\521_cadd\0540F_dgn\0540F-s-02xs3-110.dgn

USERNAME => nhidalgo DATE PLOTTED => 3/20/2015 TIME PLOTTED => 1:01:12 PM

DIST	COUNTY	ROUTE	POST MILES TOTAL PROJECT	SHEET No.	TOTAL SHEETS
02	TEH	CR		136	138

REGISTERED CIVIL ENGINEER DATE

PLANS APPROVAL DATE

REGISTERED PROFESSIONAL ENGINEER Brian Hansen No. x Exp. x CIVIL STATE OF CALIFORNIA

The State of California or its officers or agents shall not be responsible for the accuracy or completeness of electronic copies of this plan sheet.

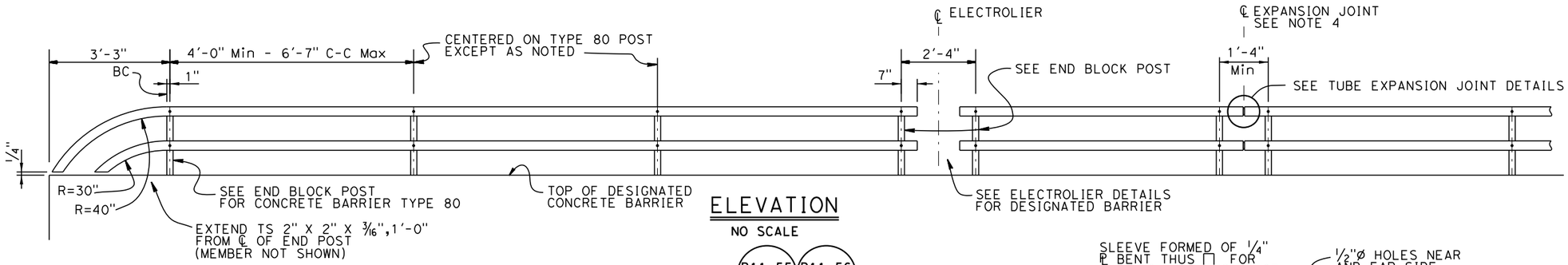

ELEVATION

NO SCALE

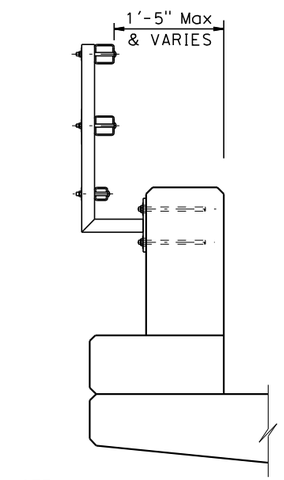

NOTE:
For details not shown, see "TYPE 732 OR 736"

TYPE 80 END BLOCK POST

1" = 1'-0"

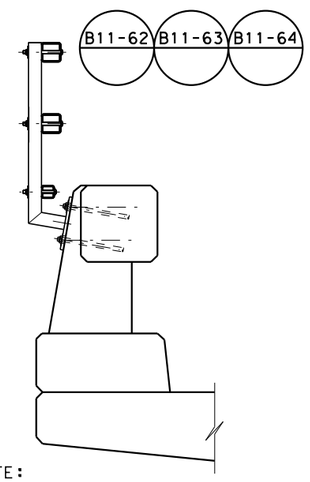

NOTE:
For details not shown, see "TYPE 732 OR 736"

TYPE 80

1" = 1'-0"

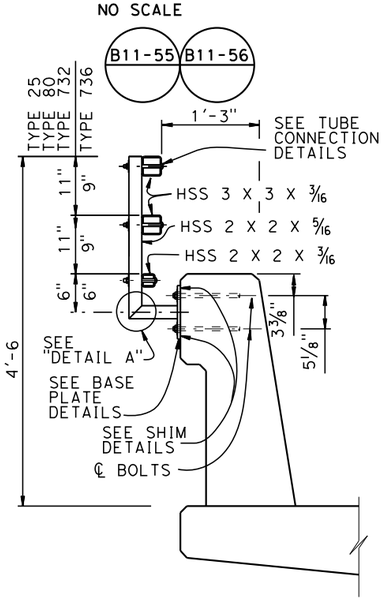

TYPE 732 OR 736

1" = 1'-0"

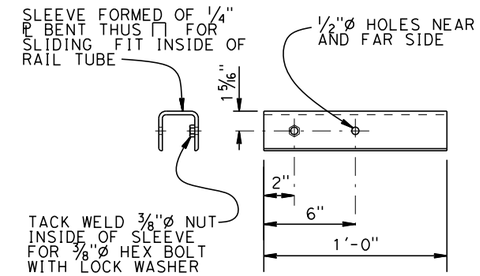

SLEEVE DETAIL

NO SCALE

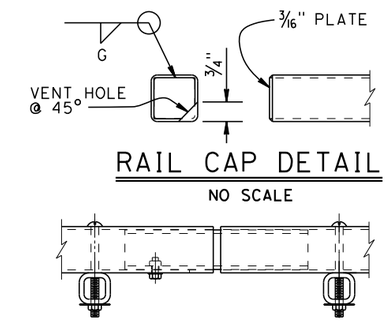

RAIL CAP DETAIL

NO SCALE

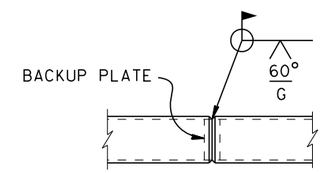

WELDED SPLICE DETAIL

NO SCALE

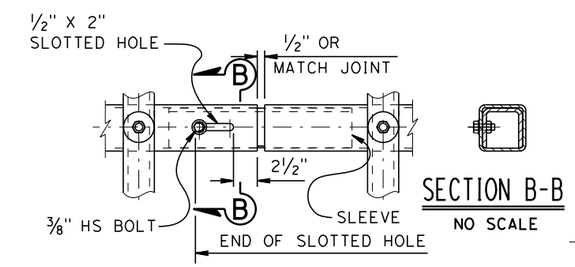

TUBE EXPANSION JOINT DETAILS

NO SCALE

SECTION B-B

NO SCALE

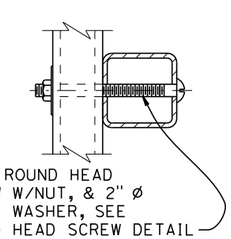

TUBE CONNECTION DETAIL

NO SCALE

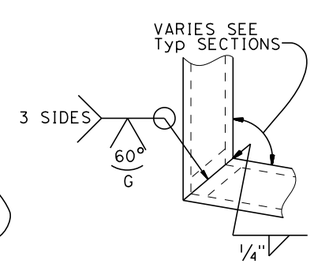

DETAIL A

NO SCALE

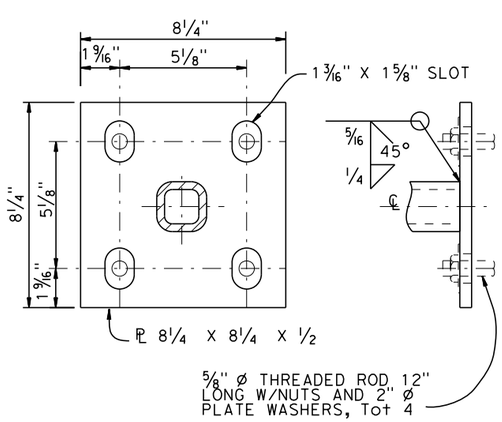

BASE PLATE DETAIL

NO SCALE

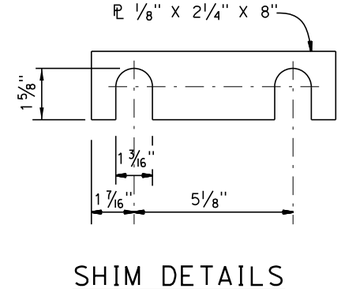

SHIM DETAILS

NO SCALE

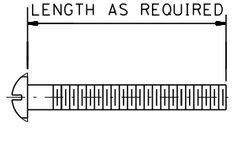

ROUND HEAD SCREW DETAIL

NO SCALE

NOTES:

1. Post shall be normal to railing.
2. Rail tubes shall be shop bent or fabricated to fit horizontal curve when radius is less than 12".
3. Tube expansion joints shall be located in the tubes spanning deck or wall joints. Increase joint width in tubes to match expansion joint width and increase sleeve length correspondingly.
4. Top rail tube shall be continuous over not less than two posts except a short post spacing is permitted near deck or wall joints, electroliers, or other rail discontinuities as noted.
5. See Project Plans for limits of tubular hand railing.

65% SUBMITTAL, NOT FOR CONSTRUCTION

USERNAME => nhidalgo DATE PLOTTED => 3/20/2015 TIME PLOTTED => 1:01:14 PM

STANDARD DRAWING

FILE NO. xs16-035

APPROVAL DATE July 2014

DS OSD 2147A (ENGLISH STANDARD DRAWING "XS" BORDER REV. (02-02-11)

ORIGINAL SCALE IN INCHES FOR REDUCED PLANS 0 1 2 3

STATE OF CALIFORNIA DEPARTMENT OF TRANSPORTATION

DIVISION OF ENGINEERING SERVICES

BRIDGE NO. 08C-0378

POST MILE

SACRAMENTO OVERFLOW BRIDGE AT JELLYS FERRY ROAD

CONCRETE BARRIER TYPE 80

TUBULAR BICYCLE RAILING DETAILS

UNIT: X
PROJECT NUMBER & PHASE: X
CONTRACT NO.: X

DISREGARD PRINTS BEARING EARLIER REVISION DATES 8/1/12

REVISION DATES

SHEET 22 OF 24

FILE => t:\sacramento\legacy\prj_file\710054 - jellys ferry bridge\500_engineering\520_structures\521_cadd\0540F_dgn\0540F-t-01xs16-035.dgn

DIST	COUNTY	ROUTE	POST MILES TOTAL PROJECT	SHEET No	TOTAL SHEETS
02	TEH	JF		137	138

REGISTERED CIVIL ENGINEER DATE

PLANS APPROVAL DATE

REGISTERED PROFESSIONAL ENGINEER — GARY PARIKH — No. G.E. 666 — Exp. 12/31/15 — GEOTECHNICAL — STATE OF CALIFORNIA

T. Y. Lin International or its officers or agents shall not be responsible for the accuracy or completeness of scanned copies of this plan sheet.

T·Y·LIN INTERNATIONAL
1601 RESPONSE ROAD, SUITE 260
SACRAMENTO, CA 95815

PARIKH CONSULTANTS, INC.
2360 QUME DRIVE, SUITE A
SAN JOSE, CA 95131

DATUM:

HORIZONTAL: CALIFORNIA COORDINATE SYSTEM, ZONE 1, NORTH AMERICAN DATUM OF 1983 (NAD83), US SURVEY FEET, EPOCH 2007.00

VERTICAL: NORTH AMERICAN VERTICAL DATUM OF 1988 (NAVD88)

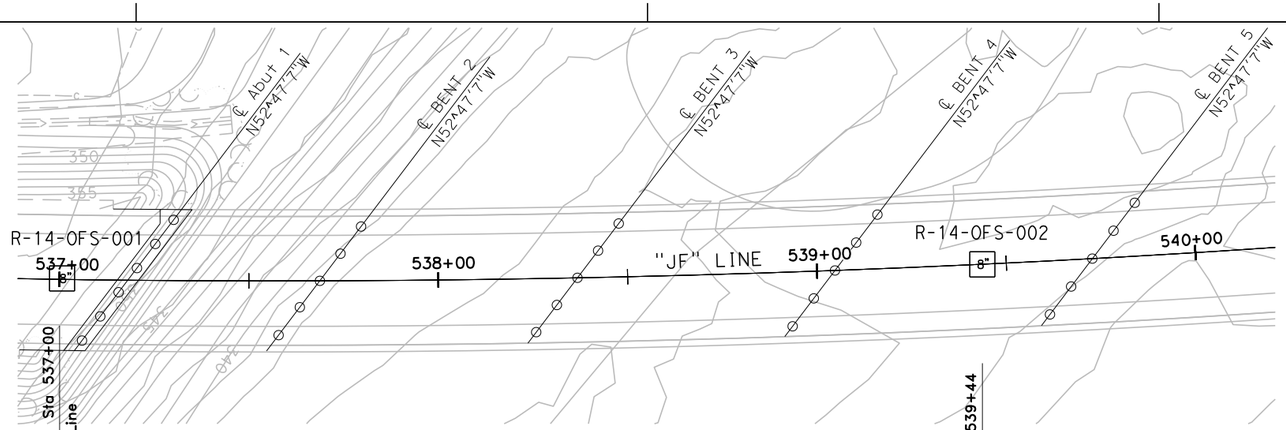

PLAN
1"=20'

NOTES:

Standard Penetration Test Sampler: I.D.=1.4"; O.D.=2" Modified California Sampler: I.D.=2.5"; O.D.=3" Hammer Assembly: A 140 lb hammer with a 30" drop (Automatic Hammer)

This LOTB sheet was prepared in accordance with the Caltrans Soil & Rock, Logging, Classification, and Presentation Manual (2010)

See Caltrans 2010 Standard Plans A10F, A10G and A10H for Soil and Rock Legends.

All dimensions are in feet unless otherwise shown

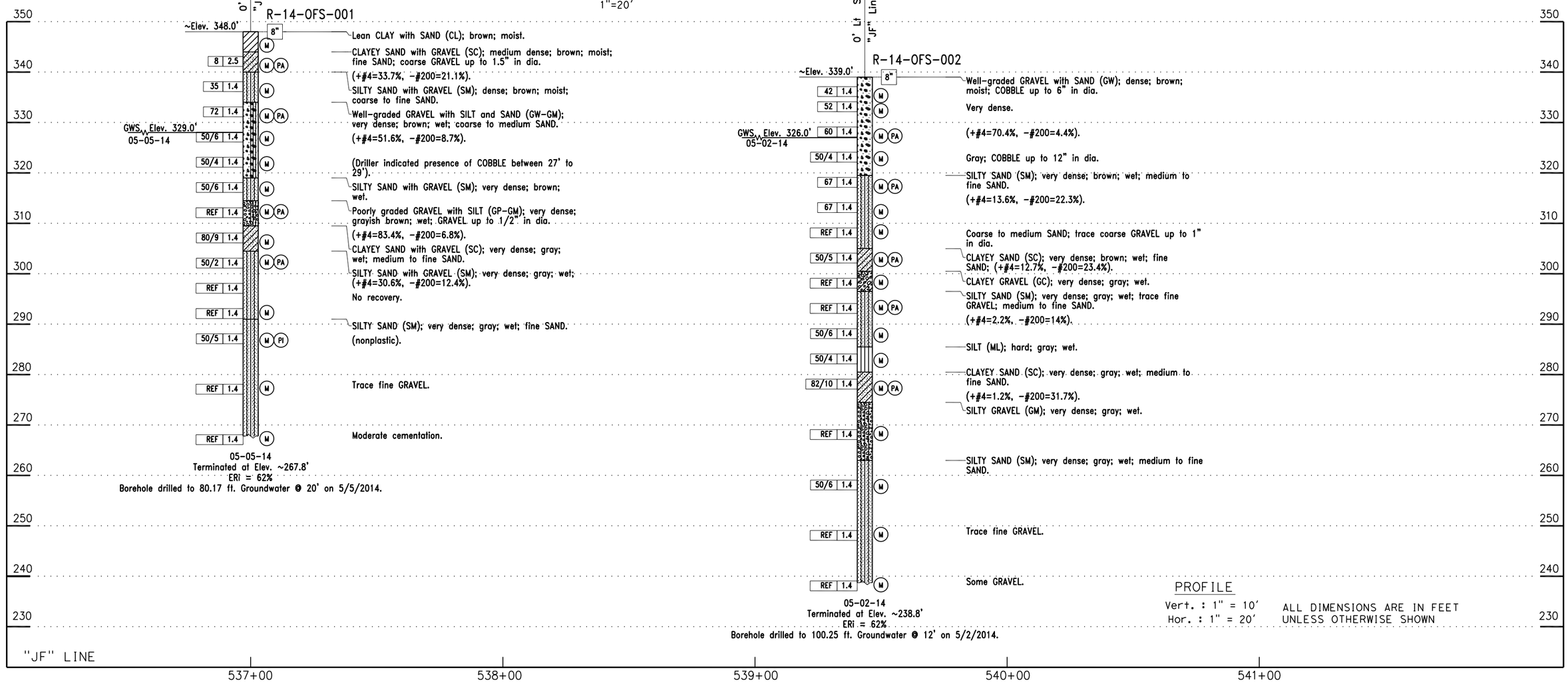

PROFILE
Vert. : 1" = 10'
Hor. : 1" = 20'

ALL DIMENSIONS ARE IN FEET UNLESS OTHERWISE SHOWN

65% SUBMITTAL, NOT FOR CONSTRUCTION

DESIGN OVERSIGHT	DRAWN BY	K. OUYANG	L. BHANGOO FIELD INVESTIGATION BY:	PREPARED FOR THE TEHAMA COUNTY PUBLIC WORKS DEPARTMENT	D. WANG PROJECT ENGINEER
SIGN OFF DATE	CHECKED BY	EMRE ORTAKCI	DATE: APRIL/MAY 2014		

BRIDGE NO. 08C-0### POST MILES -

SACRAMENTO OVERFLOW BRIDGE AT JELLYS FERRY ROAD

LOG OF TEST BORINGS 1 OF 2

OGS GEOTECHNICAL LOG OF TEST BORINGS SHEET (ENGLISH) (REV. 06-01-09)

ORIGINAL SCALE IN INCHES FOR REDUCED PLANS 0 1 2 3

CU -
EA -

DISREGARD PRINTS BEARING EARLIER REVISION DATES

REVISION DATES | SHEET 23 | OF 24

FILE => $REQUEST

ogouthier Mar 19, 2015 - 2:32pm S:\ACAD\200119.10\LOTB.dwg

USERNAME => $USER DATE PLOTTED => $DATE TIME PLOTTED =>

DIST	COUNTY	ROUTE	POST MILES TOTAL PROJECT	SHEET No	TOTAL SHEETS
02	TEH	JF		138	138

REGISTERED CIVIL ENGINEER DATE

PLANS APPROVAL DATE

REGISTERED PROFESSIONAL ENGINEER — GARY PARIKH — No. G.E. 666 — Exp. 12/31/15 — GEOTECHNICAL — STATE OF CALIFORNIA

T. Y. Lin International or its officers or agents shall not be responsible for the accuracy or completeness of scanned copies of this plan sheet.

T·Y·LIN INTERNATIONAL
1601 RESPONSE ROAD, SUITE 260
SACRAMENTO, CA 95815

PARIKH CONSULTANTS, INC.
2360 QUME DRIVE, SUITE A
SAN JOSE, CA 95131

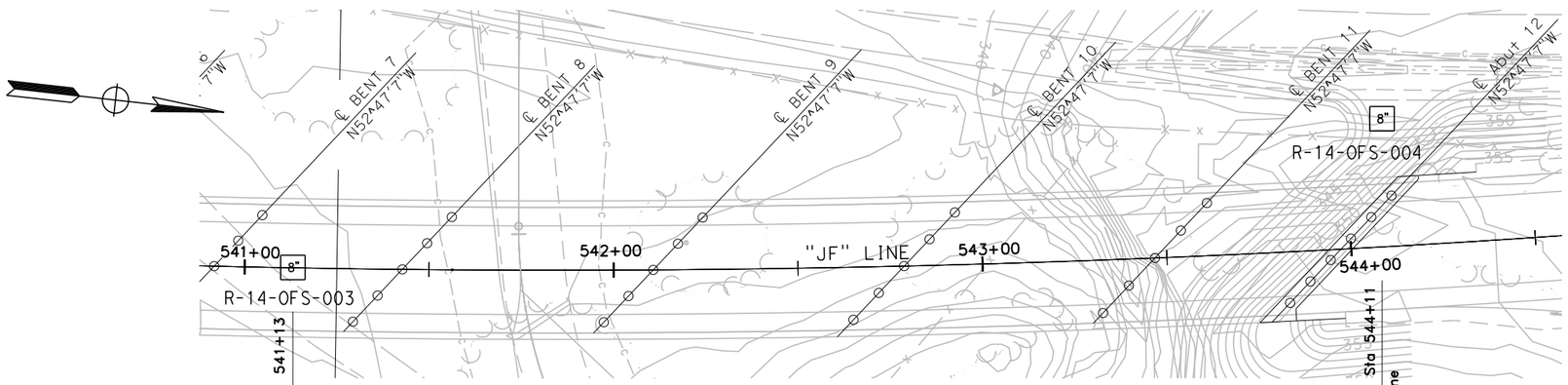

PLAN
1"=20'

NOTES:

Standard Penetration Test Sampler: I.D.=1.4"; O.D.=2" Modified California Sampler: I.D.=2.5"; O.D.=3" Hammer Assembly: A 140 lb hammer with a 30" drop (Automatic Hammer)

This LOTB sheet was prepared in accordance with the Caltrans Soil & Rock, Logging, Classification, and Presentation Manual (2010)

See Caltrans 2010 Standard Plans A10F, A10G and A10H for Soil and Rock Legends.

All dimensions are in feet unless otherwise shown

DATUM:

HORIZONTAL: CALIFORNIA COORDINATE SYSTEM, ZONE 1, NORTH AMERICAN DATUM OF 1983 (NAD83), US SURVEY FEET, EPOCH 2007.00

VERTICAL: NORTH AMERICAN VERTICAL DATUM OF 1988 (NAVD88)

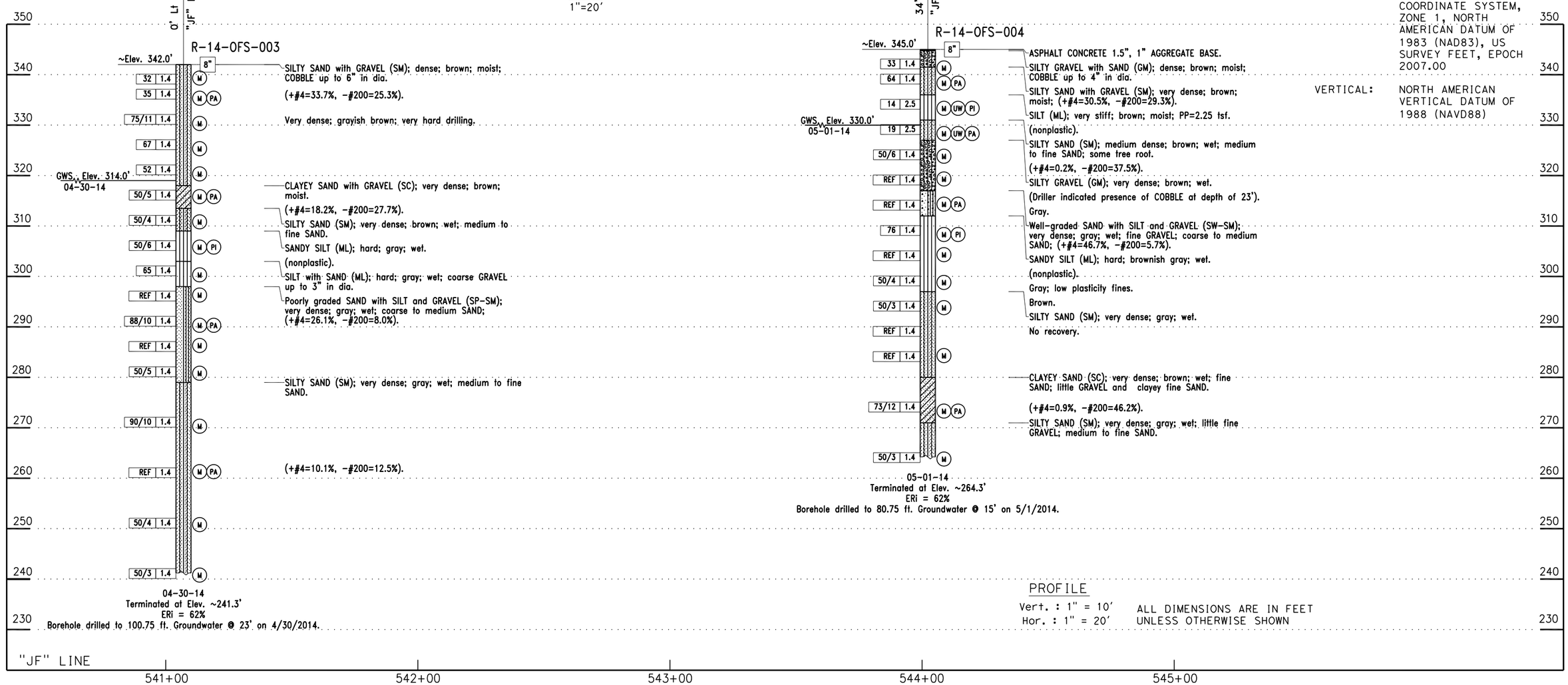

PROFILE
Vert. : 1" = 10'
Hor. : 1" = 20'

ALL DIMENSIONS ARE IN FEET UNLESS OTHERWISE SHOWN

65% SUBMITTAL, NOT FOR CONSTRUCTION

DESIGN OVERSIGHT	DRAWN BY	K. OUYANG	L. BHANGOO FIELD INVESTIGATION BY:	PREPARED FOR THE TEHAMA COUNTY PUBLIC WORKS DEPARTMENT	D. WANG PROJECT ENGINEER
SIGN OFF DATE	CHECKED BY	EMRE ORTAKCI	DATE: APRIL/MAY 2014		

BRIDGE NO. 08C-0### POST MILES -

SACRAMENTO OVERFLOW BRIDGE AT JELLYS FERRY ROAD
LOG OF TEST BORINGS 2 OF 2

OGS GEOTECHNICAL LOG OF TEST BORINGS SHEET (ENGLISH) (REV. 06-01-09)

ORIGINAL SCALE IN INCHES FOR REDUCED PLANS 0 1 2 3

CU -
EA -

DISREGARD PRINTS BEARING EARLIER REVISION DATES

REVISION DATES

SHEET 24 OF 24

FILE => $REQUEST

USERNAME => $USER DATE PLOTTED => $DATE TIME PLOTTED =>

ogauthier Mar 19, 2015 - 2:33pm S:\ACAD\200119.10\LOTB.dwg