COUNTY OF TEHAMA

DEPARTMENT OF PUBLIC WORKS

CONSTRUCTION PLANS FOR

Bridge Preventative Maintenance Program

FEDERAL AID PROJECT No. BRLS-5908(081)
COUNTY PROJECT NO. 599990

INDEX OF PLANS

PAGE	SHEET	DESCRIPTION
1	T-1	TITLE SHEET AND MAP
2	LQ-1	LOCATIONS AND QUANTITIES
3	G-1	ARAMAYO WAY AT SACRAMENTO RIVER
4	G-2	BEND FERRY ROAD AT SACRAMENTO RIVER
5	G-3	RED BANK ROAD AT RED BANK CREEK
6	G-4	SOUTH AVENUE AT SACRAMENTO RIVER
7	SP-1	STD. PLANS STRIP JOINT SEAL ASSEMBLY

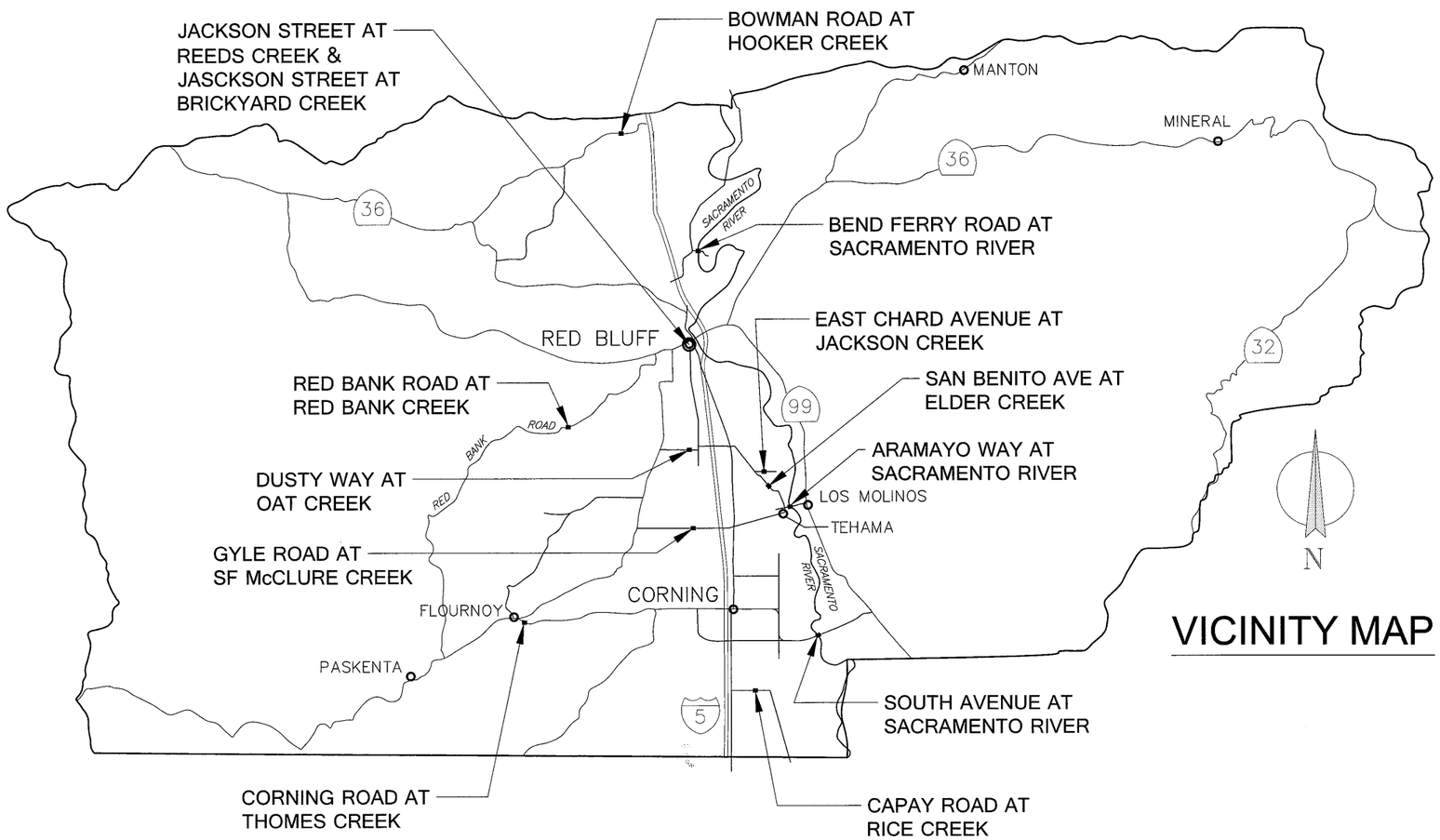

VICINITY MAP

CALL UTILITY NOTIFICATION CENTER OF CALIFORNIA
811
Know what's below.
Call before you dig.
CALL 2 BUSINESS DAYS IN ADVANCE BEFORE YOU DIG, GRADE, OR EXCAVATE FOR THE MARKING OF UNDERGROUND MEMBER UTILITIES.

TEHAMA COUNTY BOARD OF SUPERVISORS

DISTRICT 1 STEVE CHAMBLIN
DISTRICT 2 CANDY CARLSON
DISTRICT 3 DENNIS GARTON
DISTRICT 4 BOB WILLIAMS
DISTRICT 5 BURT BUNDY

APPROVED BY:

CHAIRPERSON BOARD OF SUPERVISORS

BOARD OF SUPERVISORS TEHAMA COUNTY, CA
COUNTY SEAL

TEHAMA COUNTY DEPARTMENT OF PUBLIC WORKS

9-13-16

GARY ANTONE
DIRECTOR OF PUBLIC WORKS

REGISTERED PROFESSIONAL ENGINEER GARY B. ANTONE C 36077 CIVIL STATE OF CALIFORNIA

No.	REVISION:	BY:	DATE:

REGISTERED PROFESSIONAL ENGINEER KEVIN S. ROSSER C 78389 CIVIL STATE OF CALIFORNIA

TEHAMA COUNTY PUBLIC WORKS
9380 San Benito Ave.
Gerber, Ca 96035
(530) 385-1462

SCALE	
HORIZ:	N/A
VERT:	N/A
DRAWN BY:	TAC
DATE:	9/12/2016
CHECKED BY:	KSR
DATE:	9/13/2016

Bridge Preventative Maintenance Program

Title Sheet

PROJECT NO.: 599990

SHEET NO.	PAGE NO.
T-1	1/7

AramayoWay_Snc_BPMP.dwg

			Spans			5	2	2	4	6	6	8	4	6	3	4		
			Width	48	48	33	28	32	34	32	32	26	34	30	18	32		
			Length	210	99	725	30	53	59	425	1000	223	121	836	89	151		
			Sq. Ft	10080	4752	23635	840	1696	2006	13600	32157	5779	4140	24965	1598	4850		
		GENERAL WORK DESCRIPTION		HMWM	HMWM	HMWM, PC, JOINT SEALS	HMWM	HMWM	HMWM	HMWM	HMWM, JOINT SEAL ASSEMBLIES	HMWM	HMWM	HMWM, JOINT SEAL ASSEMBLIES, BEARING PADS	HMWM	REMOVE AC, APPROACH SLABS, HMA, JOINT SEALS		
		BRIDGE LOCATION AND NUMBER		Jackson Street @ Reeds Creek (08C-0055) RB	Jackson Street @ Brickyard Crk (08C-0170) RB	South Avenue @ Sacramento (08C-0006)	East Chard Ave @ Jackson Crk (08C-0028)	Gyle Road @ SF McClure Crk (08C-0143)	Capay Road @ Rice Creek (08C-0160)	Corning Road @ Thomes Creek (08C-0029)	Aramayo Way @ Sacramento River (08C-0002)	San Benito Avenue @ Elder Creek (08C-0056)	Bowman Road @ Hooker Creek (08C-0091)	Bend Ferry @ Sacramento River (08C-0017)	Dusty Way @ Oat Creek (08C-0102)	Red Bank Road @ Red Bank Creek (08C-0067)	Estimated Quantity	
Item No.		Section Referenc	Item Description	Unit														
1		9.E-1	Mobilization	LS													LUMP SUM	
2		12	Traffic Control System	LS													LUMP SUM	
3		12.B-1	Construction Area Signs	LS													LUMP SUM	
4		12.B-2	Portable Changeable Message Sign	LS													LUMP SUM	
5		13.A	Prepare Water Pollution Control Program	LS													LUMP SUM	
6		13.B	Job Site Management	LS													LUMP SUM	
7		13.C	Temporary Concrete Washout	LS													LUMP SUM	
8		15.A	Cold Plane Asphalt Concrete Pavement	SQYD												670	670	
9		15.B	Concrete Removal	CY												12	12	
10		15.C	Bridge Removal (Portion)	EA							2			2			4	
11		15.D-1	Prepare Concrete Bridge Deck Surface	SQFT	10080	4752	23623	840	1696	2006	13600	32157	5779	4140	24965	1598		125,236
12	(F)	15.D-2	Remove Asphalt Concrete Surfacing	SQFT												4850	4,850	
13		15.D-3	Furnish Bridge Deck Treatment Material (Methacrylate)	GAL	112	53	262	9	19	22	151	357	64	46	277	18		1,392
14	(F)	15.D-3	Treat Bridge Deck (Methacrylate)	SQFT	10080	4752	23623	840	1696	2006	13600	32157	5779	4140	24965	1598		125,236
15		15.D-3 / 15.D-4	Public Safety Plan	LS													LUMP SUM	
16	(F)	15.D-4	Furnish Polyester Concrete Overlay	CF			1476										1,476	
17	(F)	15.D-4	Place Polyester Concrete Overlay	SQFT			23623										23,623	
18		37	Slurry Seal	TON												0.6	0.6	
19		39	Hot Mix Asphalt- Type B 1/2" Method	TON												54.5625	55	
20	(F)	51	Structural Concrete-Bridge	CY							9			8			17	
21		51.B	Drill and Bond Dowel	LF										46			46	
22		51.C-2	Joint Seal Type A (MR 1")	LF												180	180	
23		51.C-3	Joint Seal Type B (MR 2")	LF			65										65	
24	(P)	51.C-4	Joint Seal Assembly (MR 4")	LF							72			60			132	
25		51.D	Replace Bearing Pad	EA										2			2	
26		51.E	Structural Concrete, Approach Slab (TYPE R)	LS												1	LUMP SUM	
27	(P)	52	Bar Reinforcing Steel (Bridge)	LB							440			361			801	
28		59	Clean and Paint Structural Steel (Existing Bridge)	LS												1	1	
29		84	Thermoplastic Traffic Stripe	LF	610	499	925	430	453	459	825	1400	623	521	1236	489	551	9,022
30		85	Pavement Marker	EA	50	42	79	36	38	38	68	116	52	44	104	40	46	753

No.	REVISION:	BY:	DATE:

REGISTERED PROFESSIONAL ENGINEER KRISTIN S. HOSSER C 78369 CIVIL STATE OF CALIFORNIA

TEHAMA COUNTY PUBLIC WORKS

9380 San Benito Ave.
Gerber, Ca 96035
(530) 385-1462

COUNTY OF TEHAMA

HORIZ:	N/A
VERT:	N/A
DRAWN BY:	TAC
DATE:	9/12/2016
CHECKED BY:	KSR
DATE:	9/13/2016
SCALE	

Bridge Preventative Maintenance Program

Locations and Quantities

PROJECT NO.: 599990

SHEET NO. LQ-1

PAGE NO. 2/7

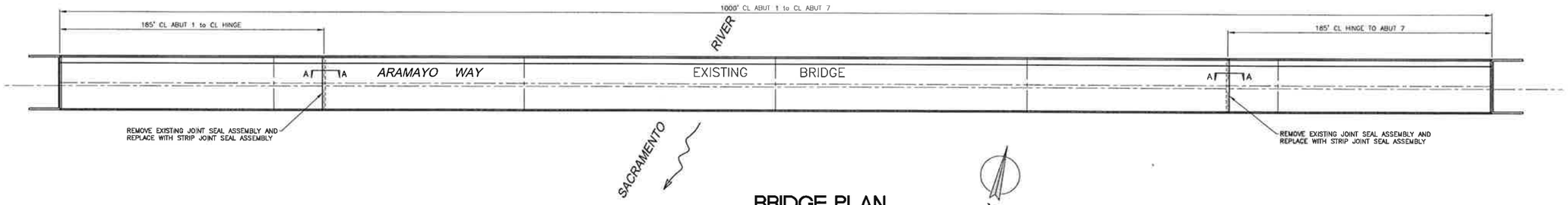

BRIDGE PLAN

SCALE: 1" = 30'

0 30 60

N

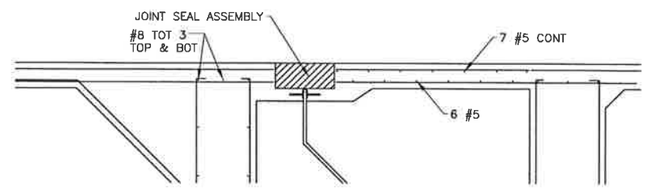

EXISTING SECTION AA

SCALE: 1" = 2'

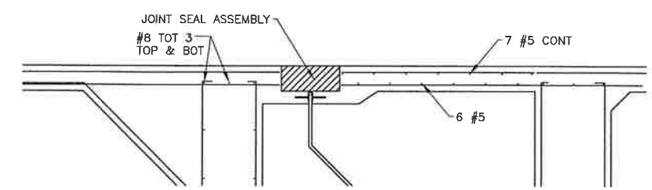

RECONSTRUCTION SECTION AA

SCALE: 1" = 2'

NOTES:

REMOVE EXISTING CONCRETE AND JOINT SEAL ASSEMBLY.

DEPTH TO BE REMOVED DEPENDANT ON REMOVAL OF EXISTING JOINT SEAL ASSEMBLY AND INSTALLATION REQUIREMENTS OF NEW. 10" MIN.

CONTRACTOR MUST REVIEW AS-BUILT PLANS AVAILABLE AS ADDITIONAL INFORMATION.

THE CONTRACTOR MUST VERIFY ALL CONTROLLING FIELD DIMENSIONS BEFORE ORDERING OR FABRICATING ANY MATERIAL.

No.	REVISION:	BY:	DATE:

REGISTERED PROFESSIONAL ENGINEER KEITH S. ROSSER C 78389 CIVIL STATE OF CALIFORNIA

TEHAMA COUNTY PUBLIC WORKS

9380 San Benito Ave.
Gerber, Ca 96035
(530) 385-1462

COUNTY OF TEHAMA

SCALE	
HORIZ:	NOTED
VERT:	NOTED
DRAWN BY:	TAC
DATE:	9/12/2016
CHECKED BY:	KSR
DATE:	9/13/2016

Bridge Preventative Maintenance Program
Sacramento River Bridge @ Aramayo Way
Joint Seal Replacement

PROJECT NO.: 599990

SHEET NO.	PAGE NO.
G-1	3/7

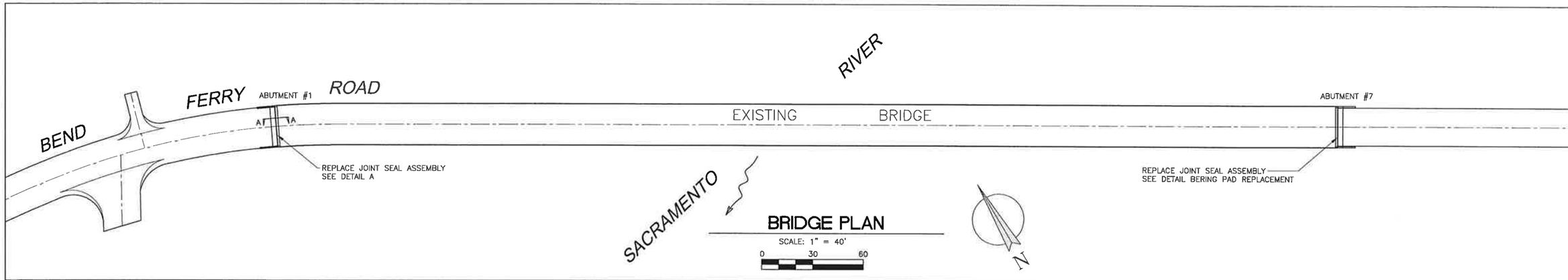

BRIDGE PLAN

SCALE: 1" = 40'

0 30 60

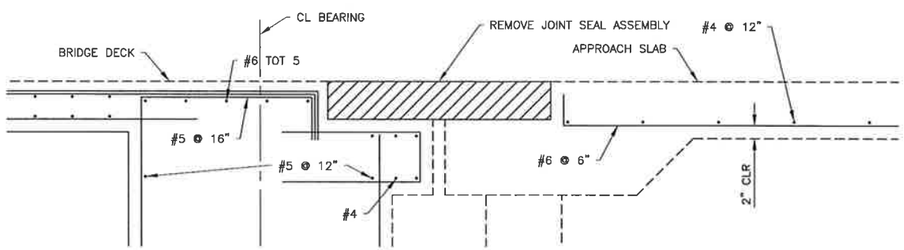

EXISTING SECTION A-A

SCALE: 1" = 2'

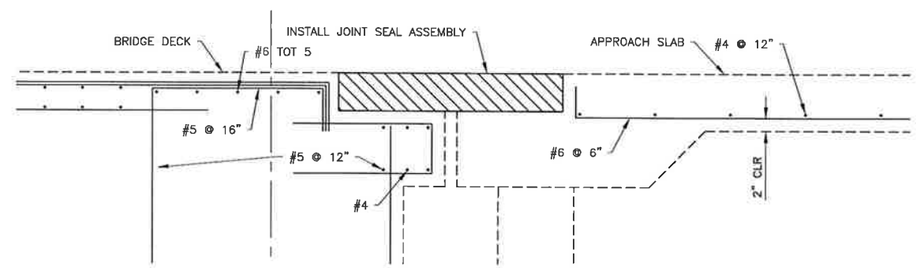

RECONSTRUCTION SECTION A-A

SCALE: 1" = 2'

NOTES:

1. PLACE TAPERED 200:1 (LEADING / TRAILING EDGE = 1/2" THICK MAX) RIDGED PAVEMENT MATERIAL AT APPROACH AND DEPARTURE OF CONSTRUCTION.

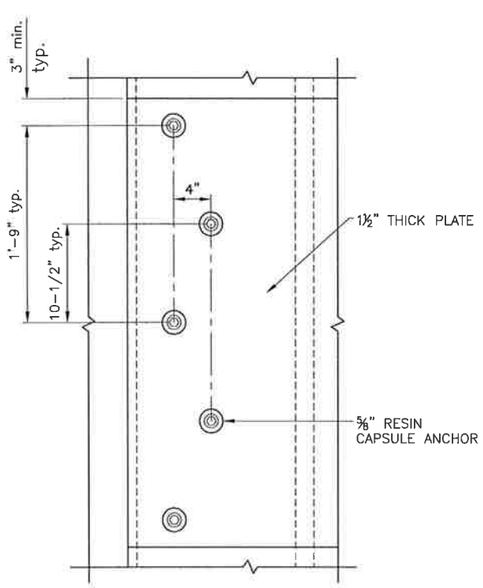

BOLT STAGGER DETAIL

SCALE: 1" = 8"

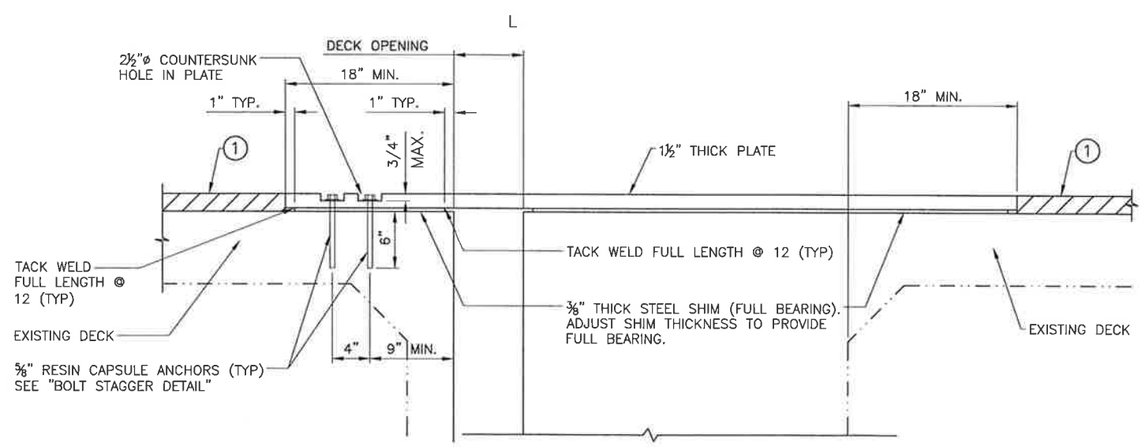

TEMPORARY DECK PLATE CONNECTION

SCALE: 1" = 8"

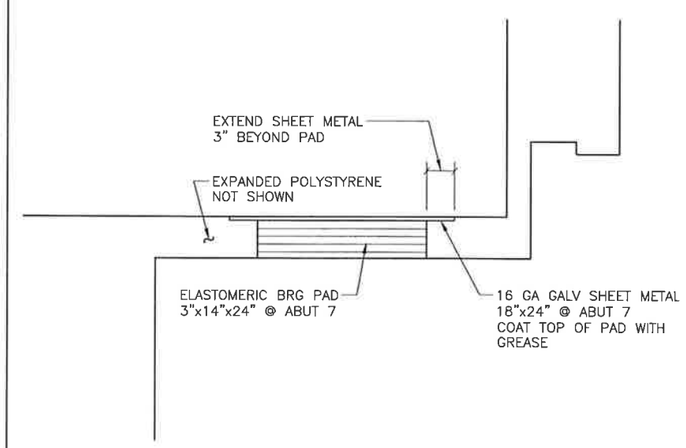

BEARING PAD REPLACEMENT DETAIL

SCALE: 1" = 8"

No.	REVISION:	BY:	DATE:

REGISTERED PROFESSIONAL ENGINEER KEVIN S. ROSSER C 78389 CIVIL STATE OF CALIFORNIA

TEHAMA COUNTY PUBLIC WORKS

9380 San Benito Ave.
Gerber, Ca 96035
(530) 385-1462

COUNTY OF TEHAMA

SCALE	
HORIZ:	NOTED
VERT:	1"=5'
DRAWN BY:	TAC
DATE:	9/12/2016
CHECKED BY:	KSR
DATE:	9/13/2016

Bridge Preventative Maintenance Program
Sacramento River Bridge @ Bend Ferry Road
Joint Seal Replacement

PROJECT NO.: 599990

SHEET NO.	PAGE NO.
G-2	4/7

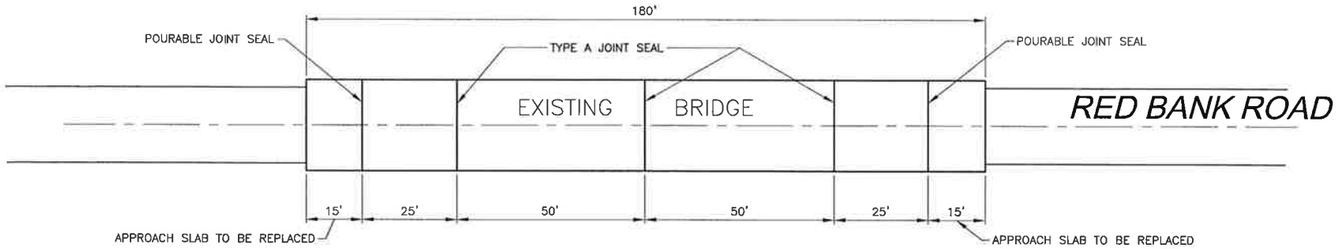

BRIDGE PLAN

SCALE: 1" = 20'

0 20 40

KEYNOTES

1.) INSTALL TYPE A JOINT SEAL, SEE STD. PLAN B6-21

2.) INSTALL POURABLE JOINT SEAL, SEE DETAIL ATTACHED (2)

3.) REMOVE EXISTING CONCRETE APPROACH SLAB AND REPLACE WITH NEW MODIFIED TYPE B APPROACH SLAB, SEE DETAIL ATTACHED (3)

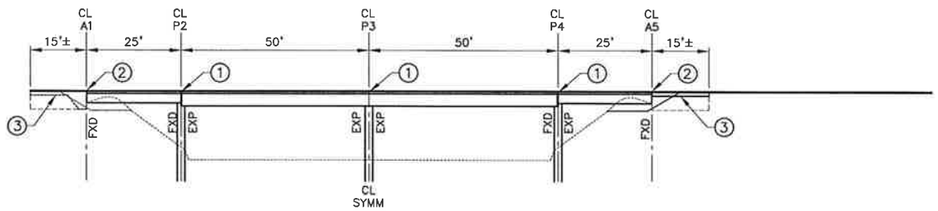

BRIDGE ELEV.

SCALE: 1" = 20'

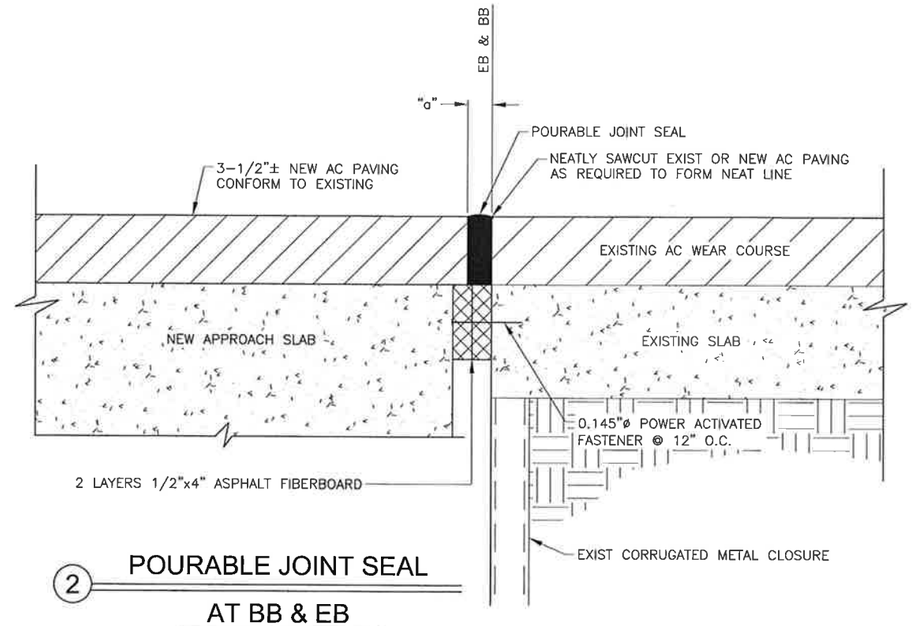

(2) POURABLE JOINT SEAL AT BB & EB

SCALE: 1" = 4"

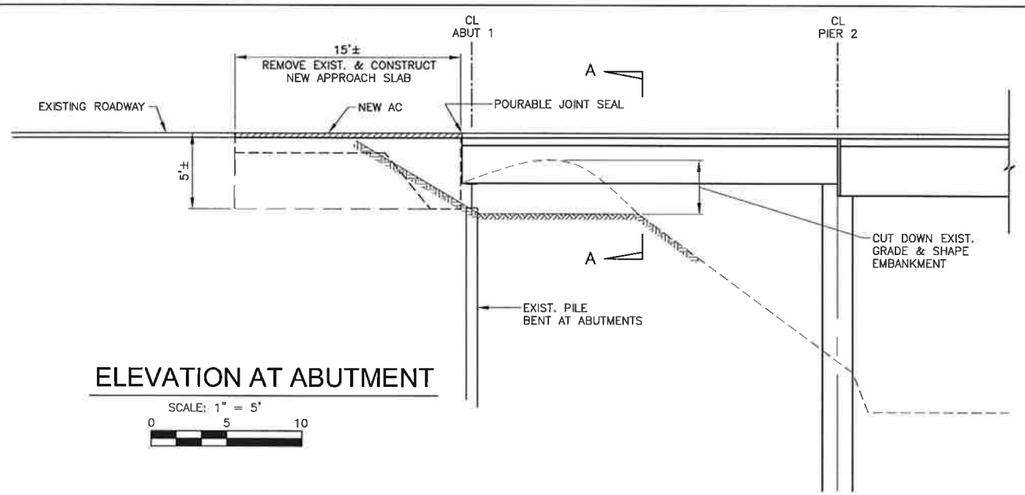

ELEVATION AT ABUTMENT

SCALE: 1" = 5'

0 5 10

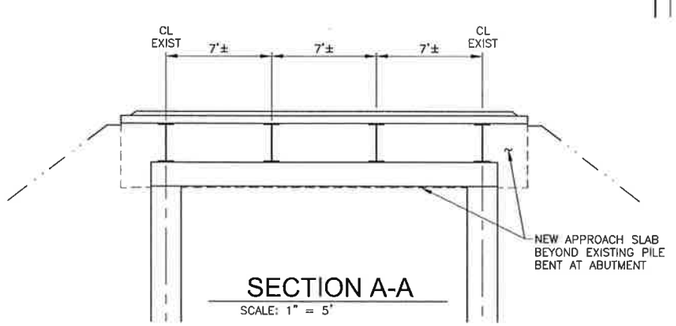

SECTION A-A

SCALE: 1" = 5'

(3) APPROACH SLAB REPLACEMENT DETAIL

No.	REVISION:	BY:	DATE:

REGISTERED PROFESSIONAL ENGINEER KEITH S. ROSSER C 78389 CIVIL STATE OF CALIFORNIA

TEHAMA COUNTY PUBLIC WORKS

9380 San Benito Ave.
Gerber, Ca 96035
(530) 365-1462

COUNTY OF TEHAMA

SCALE	
HORIZ:	NOTED
VERT:	N/A
DRAWN BY:	TAC
DATE:	9/12/2016
CHECKED BY:	KSR
DATE:	9/13/2016

Bridge Preventative Maintenance Program
Red Bank Road Bridge @ Red Bank Creek
Joint Seal Replacement

PROJECT NO.: 599990

SHEET NO.	PAGE NO.
G-3	5/7

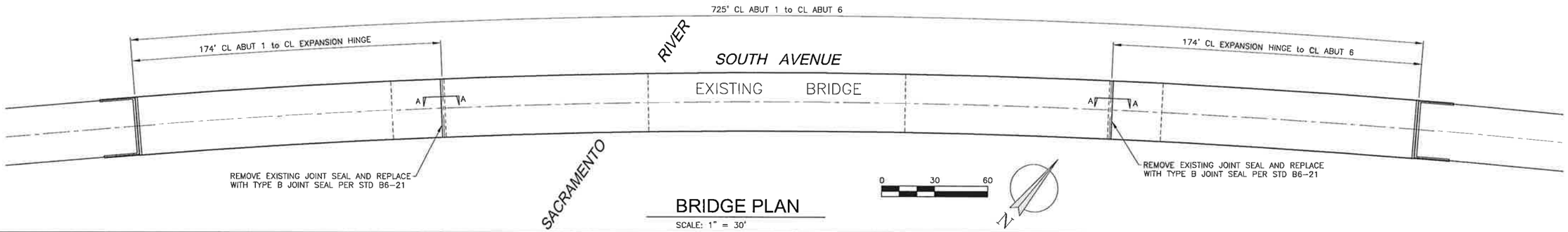

BRIDGE PLAN

SCALE: 1" = 30'

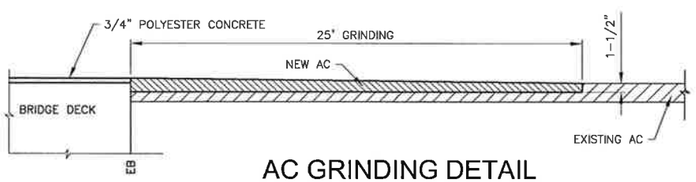

AC GRINDING DETAIL

SCALE: 1" = 1'

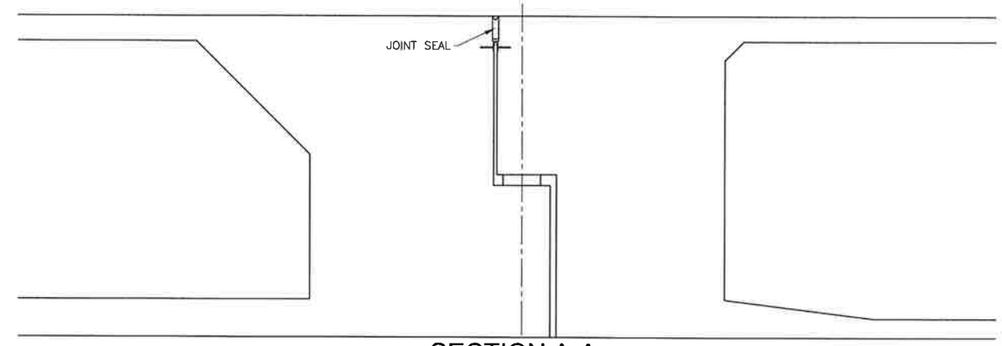

SECTION A-A

SCALE: 1" = 2'

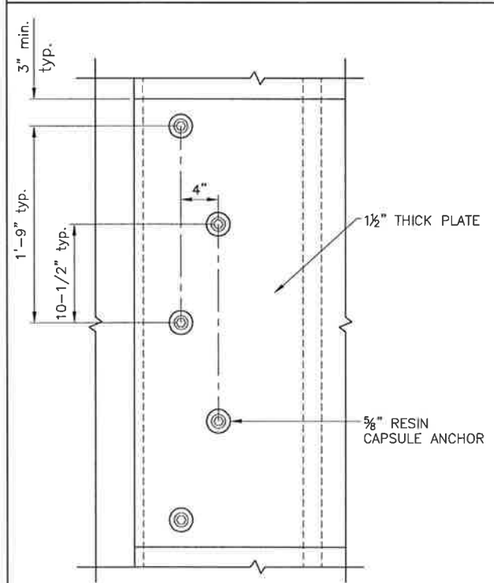

BOLT STAGGER DETAIL

SCALE: 1" = 8"

NOTES:

1. PLACE TAPERED 200:1 (LEADING / TRAILING EDGE = 1/2" THICK MAX) RIDGED PAVEMENT MATERIAL AT APPROACH AND DEPARTURE OF CONSTRUCTION.

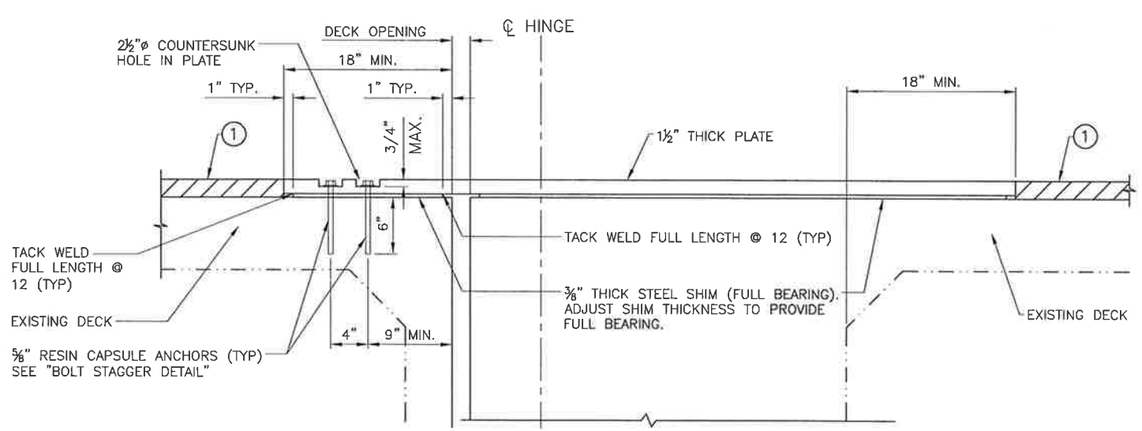

TEMPORARY DECK PLATE CONNECTION

SCALE: 1" = 8"

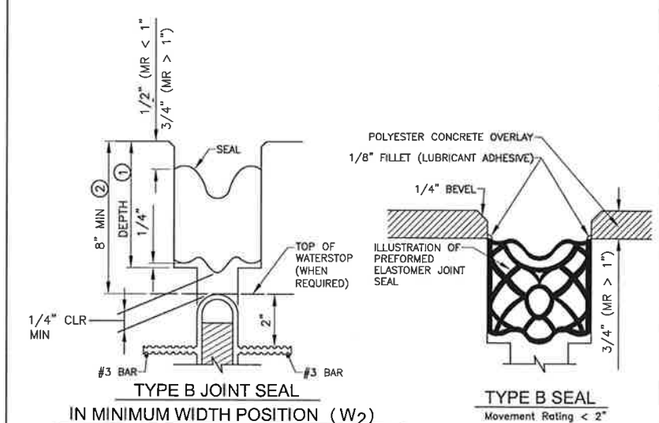

TYPE B JOINT SEAL IN MINIMUM WIDTH POSITION (W_2)

TYPE B SEAL
Movement Rating < 2"

STD. PLAN B6-21

SCALE: 1" = 4"

NOTES:

1. DEPTH OF SAWCUT: DEPTH TO BE EQUAL TO OR GREATER THAN THE DEPTH OF SEAL MEASURED ALONG THE CONTACT SURFACE, WHEN COMPRESSED TO MINIMUM WIDTH POSITION (W_2) PLUS DIMENSION SHOWN
2. OTHER DEPTHS MUST BE APPROVED BY ENGINEER.

No.	REVISION:	BY:	DATE:

REGISTERED PROFESSIONAL ENGINEER KEITH S. ROSSER C 78388 CIVIL STATE OF CALIFORNIA

TEHAMA COUNTY PUBLIC WORKS
9380 San Benito Ave.
Gerber, Ca 96035
(530) 385-1462

COUNTY OF TEHAMA

SCALE		
HORIZ: NOTED	VERT: N/A	
DRAWN BY: TAC	DATE: 9/12/2016	
CHECKED BY: KSR	DATE: 9/13/2016	

Bridge Preventative Maintenance Program
Sacramento River Bridge @ South Avenue
Joint Seal Replacement

PROJECT NO.: 599990

SHEET NO. G-4 PAGE NO. 6/7

DIST	COUNTY	ROUTE	POST MILES TOTAL PROJECT	SHEET No.	TOTAL SHEETS
2	TEH	CR	X	7	7

REGISTERED CIVIL ENGINEER Kevin Rosser 9.12.16 DATE

9.13.16 PLANS APPROVAL DATE

REGISTERED PROFESSIONAL ENGINEER KEVIN ROSSER No. 78389 CIVIL STATE OF CALIFORNIA

The State of California or its officers or agents shall not be responsible for the accuracy or completeness of electronic copies of this plan sheet.

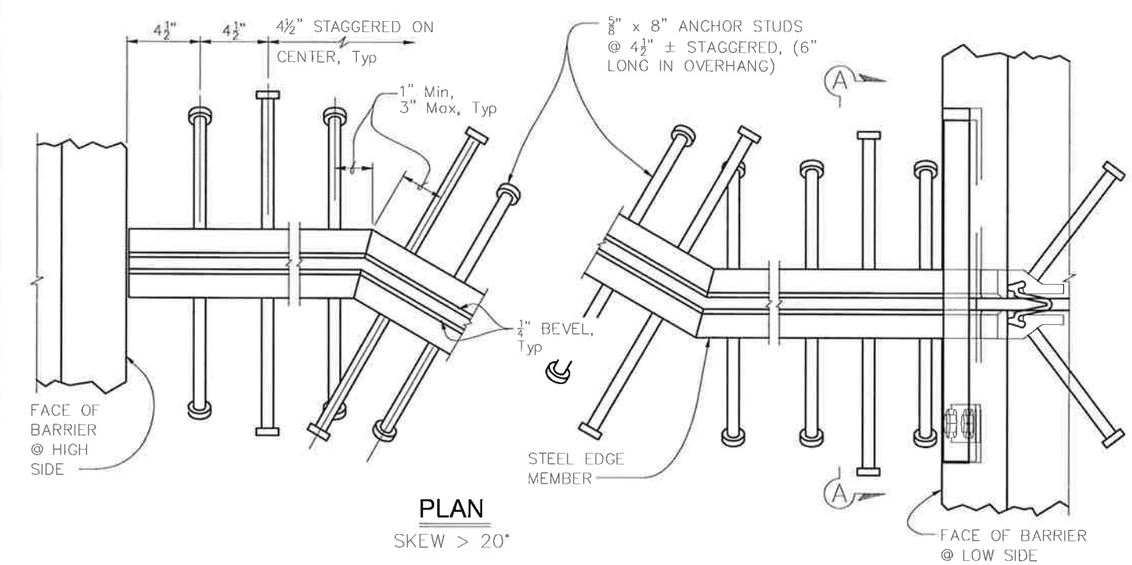

PLAN
SKEW > 20°

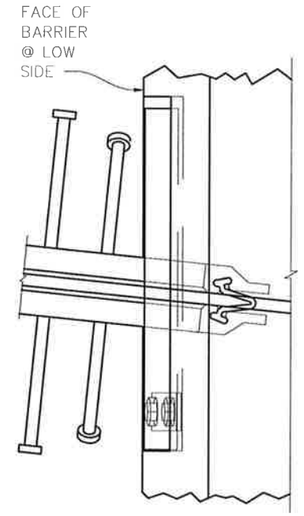

PLAN
SKEW ≤ 20°

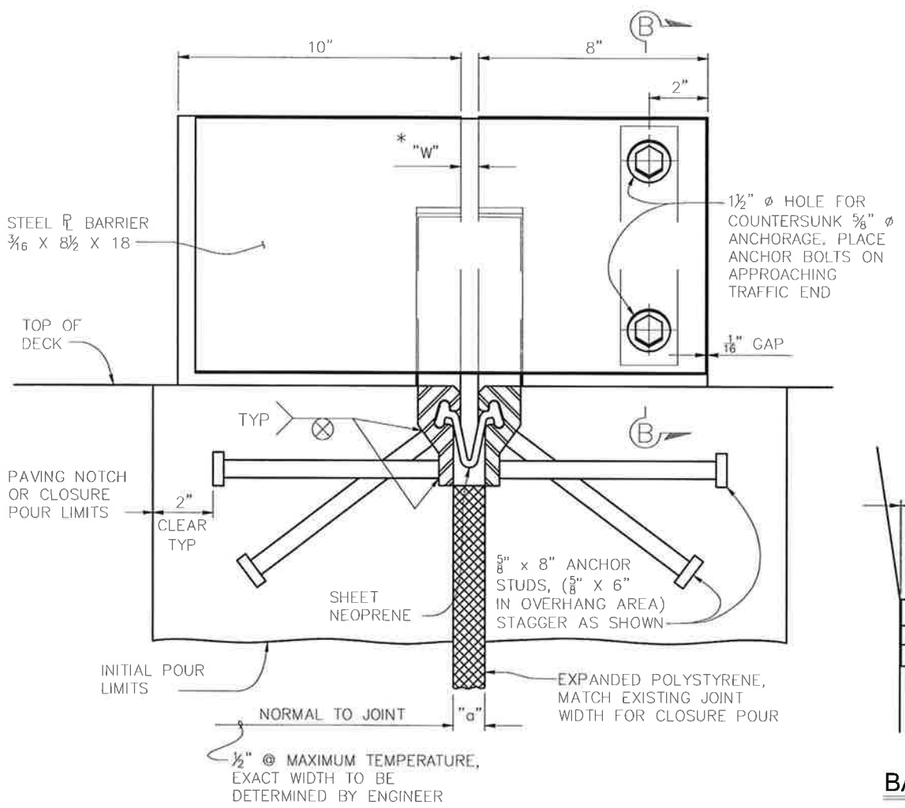

SECTION A-A

JOINT INFORMATION			"a" DIMENSIONS		
BRIDGE NO.	MOVEMENT RATING (MR)	SKEW	WINTER	SPRING & FALL	SUMMER
08C0002	3.5"	0°	TBD	TBD	TBD
08C0017	3.5"	0°	TBD	TBD	TBD

* TO SET MINIMUM JOINT OPENING "W"

$$"W" = \begin{cases} \frac{1}{2}" + [(\text{Max Str temperature in °F}) - (\text{actual Str temperature in °F})] * (a_c \text{ or } a_s)(12)(\text{contributory L in feet}) \\ \frac{1}{2}" \text{ Minimum} \\ a_c = 0.0000060 \\ a_s = 0.0000065 \end{cases}$$

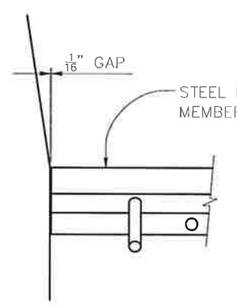

BARRIER DETAIL
HIGH SIDE

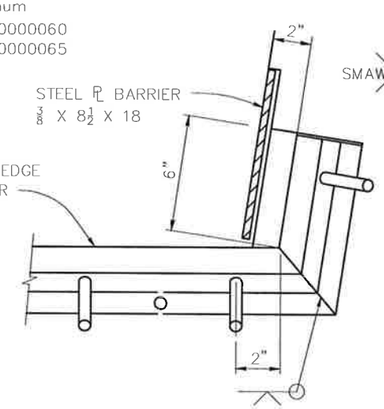

BARRIER DETAIL
LOW SIDE

SCHEMATIC STEEL EDGE MEMBER

NOTES:

1. Alternatively, fillet or complete penetration welds may be used at anchor studs.
2. Alternate types of anchor studs may be permitted subject to the authorization by the Engineer.
3. Joint seal assembly to be used in conjunction with closure pour. (See other sheets for limits). Closure pour shall not be placed until final deck surface is within the tolerances specified.
4. Use joint at crown of roadway, at any change in traverse slope in deck and at changes in horizontal direction. Place other joints at or near lanes. All metal parts to be painted or galvanized after fabrication.
5. Sheet Neoprene shall be fabricated in one continuous piece and shall be fabricated to bend around corners. Field splices of the neoprene are not allowed.
6. Insert assembly or expansion anchorage for ⅝" x 1¾" bolts. Use installation bolts extended ½" minimum past nut and coat with bond breaker, after concrete has cured, remove installation bolts, install HS bolts and sheet neoprene.
7. Sidewalk Detail similar to Barrier Detail on low side at both sides if the roadway is crowned or if the difference in elevation between the ends of the seal is 0.5' or less.
8. a_c, a_s, are the thermal expansion coefficients for concrete and steel respectively.
9. Anchor studs shall conform to ASTM 108.

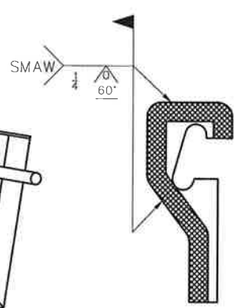

SCHEMATIC FIELD WELD DETAIL

NOTE:
SHADED AREAS TO BE WELDED

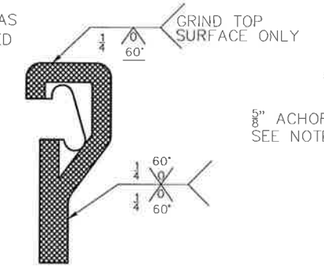

SCHEMATIC SHOP WELD DETAIL

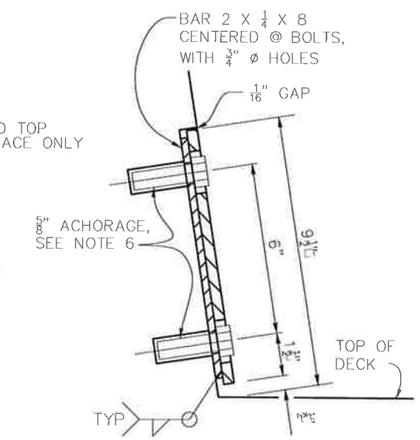

SECTION B-B

NO SCALE

STANDARD DRAWING					
FILE NO. xs8-010	APPROVAL DATE July 2014	STATE OF CALIFORNIA DEPARTMENT OF TRANSPORTATION	DIVISION OF ENGINEERING SERVICES	POST MILE	SP-7 STRIP JOINT SEAL ASSEMBLY MAXIMUM MOVEMENT RATING = 4"

DS OSD 2147A (ENGLISH STANDARD DRAWING "XS" BORDER REV. (02-02-11))

ORIGINAL SCALE IN INCHES FOR REDUCED PLANS 0 1 2 3

UNIT:
PROJECT NUMBER & PHASE: 599990
CONTRACT NO.: 599990

DISREGARD PRINTS BEARING EARLIER REVISION DATES

REVISION DATES

SHEET 7 OF 7